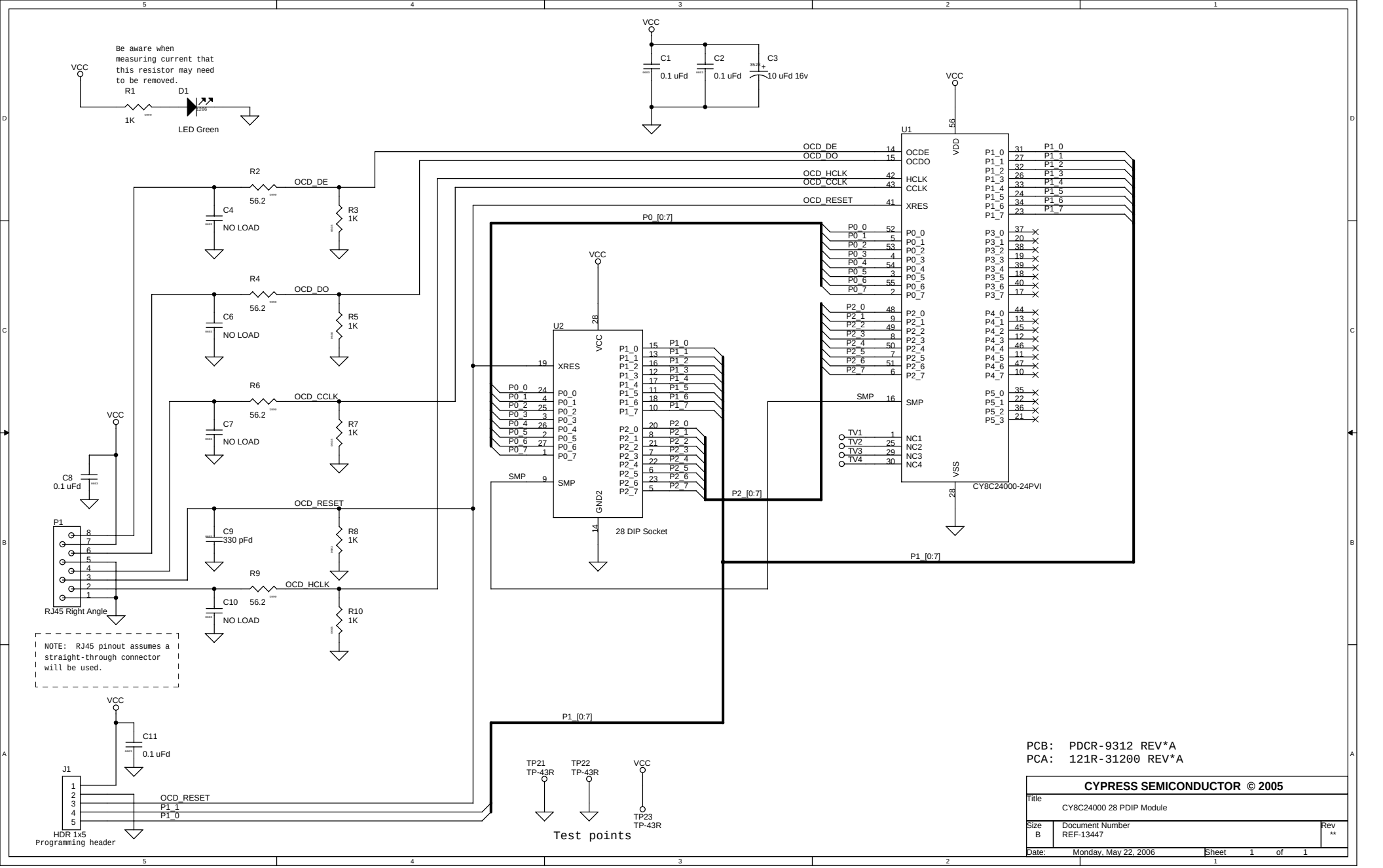
Be aware when measuring current that this resistor may need to be removed.
VCC
R1
1K
D1
LED Green
C1
0.1 uFd
C2
0.1 uFd
C3
10 uFd 16v
U1
CY8C24000-24PVI
OCD_DE
OCD_DO
OCD_HCLK
OCD_CCLK
OCD_RESET
P0_[0:7]
P1_[0:7]
P2_[0:7]
SMP
XRES
U2
28 DIP Socket
R2
R3
R4
R5
R6
R7
R8
R9
R10
C4
C6
C7
C8
0.1 uFd
C9
330 pFd
C10
C11
0.1 uFd
NO LOAD
56.2
P1
RJ45 Right Angle
NOTE: RJ45 pinout assumes a straight-through connector will be used.
J1
HDR 1x5
Programming header
TP21
TP22
TP23
TP-43R
Test points
PCB: PDCR-9312 REV*A
PCA: 121R-31200 REV*A
CYPRESS SEMICONDUCTOR © 2005
Title
CY8C24000 28 PDIP Module
Size
B
Document Number
REF-13447
Rev
**
Date:
Monday, May 22, 2006
Sheet 1 of 1