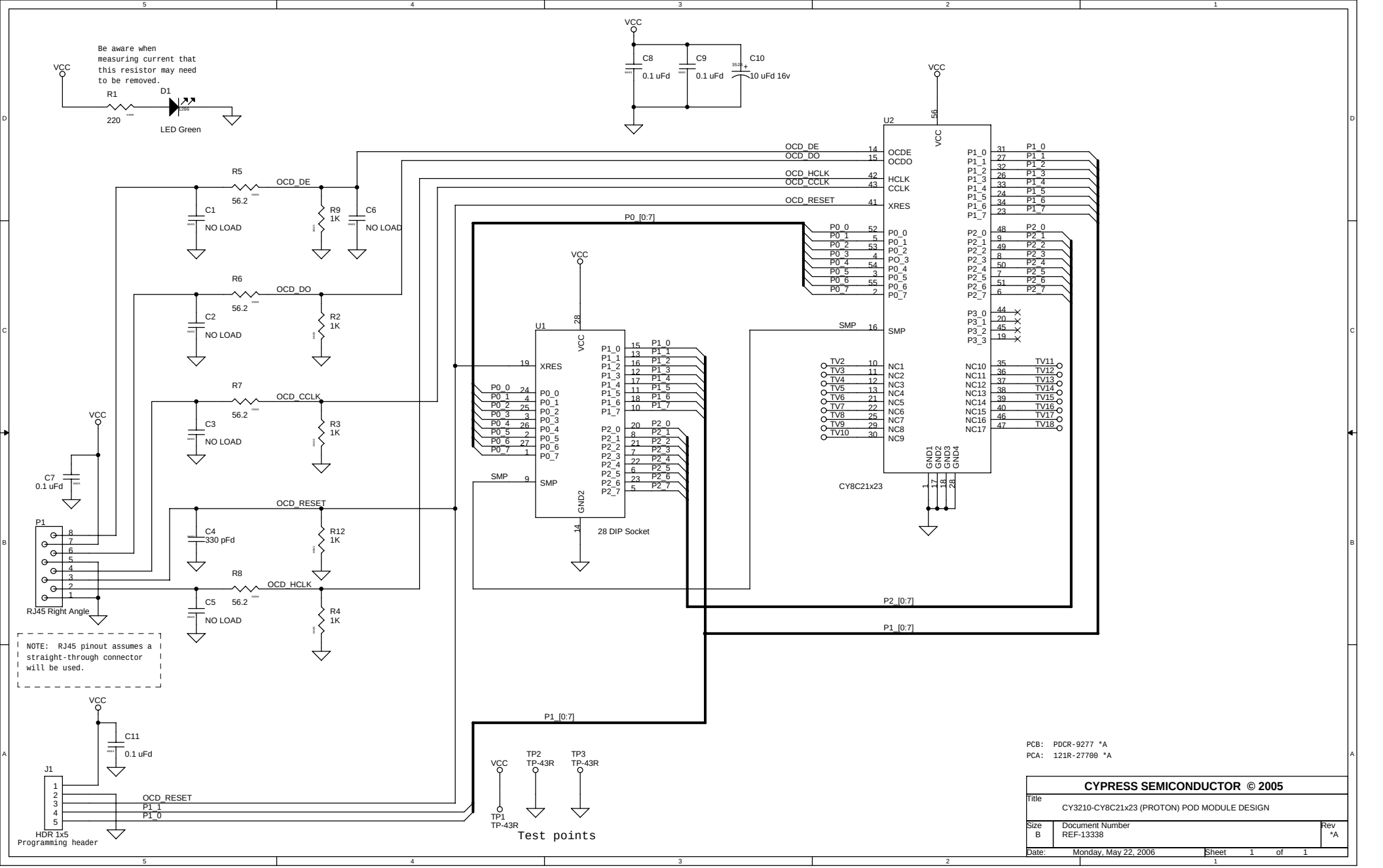
Be aware when measuring current that this resistor may need to be removed.
VCC
R1
220
D1
LED Green
C8
0.1 uFd
C9
0.1 uFd
C10
10 uFd 16v
U2
CY8C21x23
OCD_DE
OCD_DO
OCD_HCLK
OCD_CCLK
OCD_RESET
R5
56.2
C1
NO LOAD
R9
1K
C6
NO LOAD
R6
56.2
C2
NO LOAD
R2
1K
R7
56.2
C3
NO LOAD
R3
1K
C7
0.1 uFd
P1
RJ45 Right Angle
C4
330 pFd
R12
1K
R8
56.2
C5
NO LOAD
R4
1K
NOTE: RJ45 pinout assumes a straight-through connector will be used.
U1
28 DIP Socket
SMP
XRES
P0_[0:7]
P1_[0:7]
P2_[0:7]
C11
0.1 uFd
J1
HDR 1x5
Programming header
TP1
TP2
TP3
TP-43R
Test points
PCB: PDCR-9277 *A
PCA: 121R-27700 *A
CYPRESS SEMICONDUCTOR © 2005
Title
CY3210-CY8C21x23 (PROTON) POD MODULE DESIGN
Size B
Document Number REF-13338
Rev *A
Date: Monday, May 22, 2006
Sheet 1 of 1