Please note that Cypress is an Infineon Technologies Company.
The document following this cover page is marked as “Cypress” document as this is the company that originally developed the product. Please note that Infineon will continue to offer the product to new and existing customers as part of the Infineon product portfolio.

Continuity of document content
The fact that Infineon offers the following product as part of the Infineon product portfolio does not lead to any changes to this document. Future revisions will occur when appropriate, and any changes will be set out on the document history page.

Continuity of ordering part numbers
Infineon continues to support existing part numbers. Please continue to use the ordering part numbers listed in the datasheet for ordering.

CY8C28xxx TRM

CY8C28xxx

PSoC® Programmable System-on-Chip™ TRM
(Technical Reference Manual)

Document No. 001-52594 Rev. *G

January 20, 2017

Cypress Semiconductor
198 Champion Court
San Jose, CA 95134-1709

Phone (USA): 800.858.1810
Phone (Intnl): 408.943.2600
http://www.cypress.com

Copyrights

© Cypress Semiconductor Corporation, 2009-2017 This document is the property of Cypress Semiconductor Corporation and its subsidiaries, including Spansion LLC ("Cypress"). This document, including any software or firmware included or referenced in this document ("Software"), is owned by Cypress under the intellectual property laws and treaties of the United States and other countries worldwide. Cypress reserves all rights under such laws and treaties and does not, except as specifically stated in this paragraph, grant any license under its patents, copyrights, trademarks, or other intellectual property rights. If the Software is not accompanied by a license agreement and you do not otherwise have a written agreement with Cypress governing the use of the Software, then Cypress hereby grants you a personal, non-exclusive, nontransferable license (without the right to sublicense) (1) under its copyright rights in the Software (a) for Software provided in source code form, to modify and reproduce the Software solely for use with Cypress hardware products, only internally within your organization, and (b) to distribute the Software in binary code form externally to end users (either directly or indirectly through resellers and distributors), solely for use on Cypress hardware product units, and (2) under those claims of Cypress's patents that are infringed by the Software (as provided by Cypress, unmodified) to make, use, distribute, and import the Software solely for use with Cypress hardware products. Any other use, reproduction, modification, translation, or compilation of the Software is prohibited.

TO THE EXTENT PERMITTED BY APPLICABLE LAW, CYPRESS MAKES NO WARRANTY OF ANY KIND, EXPRESS OR IMPLIED, WITH REGARD TO THIS DOCUMENT OR ANY SOFTWARE OR ACCOMPANYING HARDWARE, INCLUDING, BUT NOT LIMITED TO, THE IMPLIED WARRANTIES OF MERCHANTABILITY AND FITNESS FOR A PARTICULAR PURPOSE. To the extent permitted by applicable law, Cypress reserves the right to make changes to this document without further notice. Cypress does not assume any liability arising out of the application or use of any product or circuit described in this document. Any information provided in this document, including any sample design information or programming code, is provided only for reference purposes. It is the responsibility of the user of this document to properly design, program, and test the functionality and safety of any application made of this information and any resulting product. Cypress products are not designed, intended, or authorized for use as critical components in systems designed or intended for the operation of weapons, weapons systems, nuclear installations, life-support devices or systems, other medical devices or systems (including resuscitation equipment and surgical implants), pollution control or hazardous substances management, or other uses where the failure of the device or system could cause personal injury, death, or property damage ("Unintended Uses"). A critical component is any component of a device or system whose failure to perform can be reasonably expected to cause the failure of the device or system, or to affect its safety or effectiveness. Cypress is not liable, in whole or in part, and you shall and hereby do release Cypress from any claim, damage, or other liability arising from or related to all Unintended Uses of Cypress products. You shall indemnify and hold Cypress harmless from and against all claims, costs, damages, and other liabilities, including claims for personal injury or death, arising from or related to any Unintended Uses of Cypress products.

Cypress, the Cypress logo, Spansion, the Spansion logo, and combinations thereof, WICED, PSoC, CapSense, EZ-USB, F-RAM, and Traveo are trademarks or registered trademarks of Cypress in the United States and other countries. For a more complete list of Cypress trademarks, visit cypress.com. Other names and brands may be claimed as property of their respective owners.

Contents Overview

Section A: Overview 21
1. Pin Information 29

Section B: PSoC® Core 35
2. CPU Core (M8C) 39
3. Supervisory ROM (SROM) 49
4. RAM Paging 57
5. Interrupt Controller 65
6. General Purpose I/O (GPIO) 73
7. Analog Output Drivers 79
8. Internal Main Oscillator (IMO) 81
9. Internal Low Speed Oscillator (ILO) 85
10. External Crystal Oscillator (ECO) 87
11. Phase-Locked Loop (PLL) 93
12. Sleep and Watchdog 97

Section C: Register Reference 109
13. Register Details 125

Section D: Digital System 311
14. Global Digital Interconnect (GDI) 317
15. Array Digital Interconnect (ADI) 325
16. Row Digital Interconnect (RDI) 327
17. Digital Blocks 335

Section E: Analog System 383
18. Analog Interface 393
19. Analog Array 409
20. Analog Input Configuration 417
21. Analog Reference 421
22. Continuous Time PSoC® Block 425
23. Switched Capacitor PSoC® Block 431
24. Two Column Limited Analog System 441

Section F: System Resources 461
25. Digital Clocks 465
26. Multiply Accumulate (MAC) 477
27. Decimator 483
28. I^2C 493
29. Internal Voltage Reference 511
30. System Resets 513
31. Switch Mode Pump (SMP) 519
32. POR and LVD 523

33. I/O Analog Multiplexer 525
34. Real Time Clock (RTC) 533
35. 10-Bit SAR ADC Controller 537

Section H: Glossary **545**

Index **561**

Contents

Section A: Overview **21**

Document Organization 21
Top Level Architecture 22
PSoC Core 22
Digital System 22
Analog System 22
System Resources 22
PSoC Device Characteristics 24
PSoC Device Distinctions 25
Getting Started 26
Support 26
Product Upgrades 26
Development Kits 26
Document History 26
Documentation Conventions 27
Register Conventions 27
Numeric Naming 27
Units of Measure 27
Acronyms 28

1. Pin Information **29**

1.1 Pinouts for the CY8C28xxx....29
1.1.1 20-Pin Part Pinouts 30
1.1.2 28-Pin Part Pinouts....31
1.1.3 44-Pin Part Pinouts 32
1.1.4 48-Pin Part Pinouts 33
1.1.5 56-Pin Part Pinout....34

Section B: PSoC® Core **35**

Top Level Core Architecture 35
Interpreting the Core Documentation 35
Core Register Summary 36

2. CPU Core (M8C) **39**

2.1 Overview....39
2.2 Internal Registers....39
2.3 Address Spaces....39
2.4 Instruction Set Summary 40
2.5 Instruction Formats....42
2.5.1 One-Byte Instructions 42
2.5.2 Two-Byte Instructions 42
2.5.3 Three-Byte Instructions....43

2.6 Addressing Modes ... 43
2.6.1 Source Immediate ... 43
2.6.2 Source Direct ... 44
2.6.3 Source Indexed ... 44
2.6.4 Destination Direct ... 45
2.6.5 Destination Indexed ... 45
2.6.6 Destination Direct Source Immediate ... 45
2.6.7 Destination Indexed Source Immediate ... 46
2.6.8 Destination Direct Source Direct ... 46
2.6.9 Source Indirect Post Increment ... 47
2.6.10 Destination Indirect Post Increment ... 47
2.7 Register Definitions ... 48
2.7.1 CPU_F Register ... 48

3. Supervisory ROM (SROM) 49

3.1 Architectural Description ... 49
3.1.1 Additional SROM Feature ... 50
3.1.2 SROM Function Descriptions ... 50
3.1.2.1 SWBootReset Function ... 50
3.1.2.2 HWBootReset Function ... 51
3.1.2.3 ReadBlock Function ... 51
3.1.2.4 WriteBlock Function ... 52
3.1.2.5 EraseBlock Function ... 52
3.1.2.6 ProtectBlock Function ... 52
3.1.2.7 TableRead Function ... 52
3.1.2.8 EraseAll Function ... 53
3.1.2.9 Checksum Function ... 53
3.1.2.10 Calibrate0 Function ... 53
3.1.2.11 Calibrate1 Function ... 53
3.1.2.12 WriteAndVerify Function ... 54
3.2 Register Definitions ... 54
3.2.1 FLS_PR1 Register ... 54
3.2.2 Related Registers ... 54
3.3 Clocking Strategy ... 55
3.3.1 DELAY Parameter ... 55
3.3.2 CLOCK Parameter ... 55

4. RAM Paging 57

4.1 Architectural Description ... 57
4.1.1 Basic Paging ... 57
4.1.2 Stack Operations ... 58
4.1.3 Interrupts ... 58
4.1.4 MVI Instructions ... 58
4.1.5 Current Page Pointer ... 58
4.1.6 Index Memory Page Pointer ... 59
4.2 Register Definitions ... 60
4.2.1 TMP_DRx Registers ... 60
4.2.2 CUR_PP Register ... 60
4.2.3 STK_PP Register ... 61
4.2.4 IDX_PP Register ... 61
4.2.5 MVR_PP Register ... 61
4.2.6 MVW_PP Register ... 62

4.2.7 CPU_F Register 62
4.2.8 MVR_PP Register 62
4.2.9 MVW_PP Register 63
4.2.10 CPU_F Register 63

5. Interrupt Controller 65

5.1 Architectural Description 65
5.1.1 Posted versus Pending Interrupts 66
5.2 Application Description 67
5.3 Register Definitions 68
5.3.1 INT_CLRx Registers 68
5.3.1.1 INT_CLR0 Register 68
5.3.1.2 INT_CLR1 Register 69
5.3.1.3 INT_CLR2 Register 69
5.3.1.4 INT_CLR3 Register 69
5.3.2 INT_MSKx Registers 70
5.3.2.1 INT_MSK3 Register 70
5.3.2.2 INT_MSK2 Register 70
5.3.2.3 INT_MSK0 Register 70
5.3.2.4 INT_MSK1 Register 71
5.3.3 INT_VC Register 71
5.3.4 CPU_F Register 72

6. General Purpose I/O (GPIO) 73

6.1 Architectural Description 73
6.1.1 Digital I/O 73
6.1.2 Global I/O 73
6.1.3 Analog Input 74
6.1.4 GPIO Block Interrupts 75
6.2 Register Definitions 76
6.2.1 PRTxDR Registers 76
6.2.2 PRTxIE Registers 76
6.2.3 PRTxGS Registers 76
6.2.4 PRTxDMx Registers 77
6.2.5 PRTxICx Registers 77

7. Analog Output Drivers 79

7.1 Architectural Description 79
7.2 Register Definitions 80
7.2.1 ABF_CR0 Register 80

8. Internal Main Oscillator (IMO) 81

8.1 Architectural Description 81
8.2 Application Description 81
8.2.1 Trimming the IMO 81
8.2.2 Engaging Slow IMO 81
8.3 Register Definitions 82
8.3.1 CPU_SCR1 Register 82
8.3.2 OSC_CR2 Register 82
8.3.3 IMO_TR Register 83
8.3.4 IMO_TR1 Register 83

9. Internal Low Speed Oscillator (ILO) 85

9.1 Architectural Description....85
9.2 Register Definitions....85
9.2.1 ILO_TR Register....85

10. External Crystal Oscillator (ECO) 87

10.1 Architectural Description....87
10.1.1 ECO External Components....88
10.2 Register Definitions....89
10.2.1 CPU_SCR1 Register....89
10.2.2 OSC_CR0 Register....90
10.2.3 OSC_CR2 Register....91
10.2.4 ECO_TR Register....91

11. Phase-Locked Loop (PLL) 93

11.1 Architectural Description....93
11.2 Register Definitions....93
11.2.1 OSC_CR0 Register....94
11.2.2 OSC_CR2 Register....95

12. Sleep and Watchdog 97

12.1 Architectural Description....97
12.1.1 32 kHz Clock Selection....97
12.1.2 Sleep Timer....97
12.2 Application Description....98
12.3 Register Definitions....99
12.3.1 INT_MSK0 Register....99
12.3.2 RES_WDT Register....99
12.3.3 CPU_SCR1 Register....100
12.3.4 CPU_SCR0 Register....101
12.3.5 OSC_CR0 Register....102
12.3.6 OSC_CR2 Register....103
12.3.7 ILO_TR Register....103
12.3.8 ECO_TR Register....104
12.4 Timing Diagrams....104
12.4.1 Sleep Sequence....104
12.4.2 Wakeup Sequence....105
12.4.3 Bandgap Refresh....107
12.4.4 Watchdog Timer....107
12.5 Power Consumption....108

Section C: Register Reference 109

Register General Conventions....109
Register Naming Conventions....109
Register Mapping Tables....109
CY8C28x03 Register Maps....110
Register Map Bank 0 Table: User Space....110
Register Map Bank 1 Table: Configuration Space....111
CY8C28x13 Register Maps....112
Register Map Bank 0 Table: User Space....112
Register Map Bank 1 Table: Configuration Space....113

CY8C28x23 Register Maps 114
Register Map Bank 0 Table: User Space 114
Register Map Bank 1 Table: Configuration Space 115
CY8C28x33 Register Maps 116
Register Map Bank 0 Table: User Space 116
Register Map Bank 1 Table: Configuration Space 117
CY8C28x43 Register Maps 118
Register Map Bank 0 Table: User Space 118
Register Map Bank 1 Table: Configuration Space 119
CY8C28x45 Register Maps 120
Register Map Bank 0 Table: User Space 120
Register Map Bank 1 Table: Configuration Space 121
CY8C28x52 Register Maps 122
Register Map Bank 0 Table: User Space 122
Register Map Bank 1 Table: Configuration Space 123

13. Register Details 125

13.1 Maneuvering Around the Registers 125
Register Conventions 126
13.1.1 Register Naming Conventions 126
13.2 Bank 0 Registers 127
13.2.1 PRTxDR 127
13.2.2 PRTxIE 128
13.2.3 PRTxGS 129
13.2.4 PRTxDM2 130
13.2.5 DxCxxDR0 131
13.2.6 DxCxxDR1 132
13.2.7 DxCxxDR2 133
13.2.8 DxCxxCR0 (Timer Control:000) 134
13.2.9 DxCxxCR0 (Counter Control:001) 135
13.2.10 DxCxxCR0 (Dead Band Control:100) 136
13.2.11 DxCxxCR0 (CRCPRS Control:010) 137
13.2.12 DxCxxCR0 (PWMDBL Control:011) 138
13.2.13 DCCxxCR0 (SPIM Control:0-110) 140
13.2.14 DCCxxCR0 (SPIS Control:1-110) 141
13.2.15 DxCxxCR0 (DSM Control:111) 142
13.2.16 DCCxxCR0 (UART Transmitter Control) 143
13.2.17 DCCxxCR0 (UART Receiver Control) 144
13.2.18 AMX_IN 145
13.2.19 AMUX_CFG 146
13.2.20 CLK_CR3 147
13.2.21 ARF_CR 148
13.2.22 CMP_CR0 149
13.2.23 ASY_CR 150
13.2.24 CMP_CR1 151
13.2.25 SADC_DH 153
13.2.26 SADC_DL 154
13.2.27 TMP_DRx 155
13.2.28 ACCxxCR3 156
13.2.29 ACCxxCR0 157
13.2.30 ACCxxCR1 159
13.2.31 ACCxxCR2 160
13.2.32 ASCxxCR0 161

13.2.33 ASCxxCR1 162
13.2.34 ASCxxCR2 163
13.2.35 ASCxxCR3 164
13.2.36 ASDxxCR0 165
13.2.37 ASDxxCR1 166
13.2.38 ASDxxCR2 167
13.2.39 ASDxxCR3 168
13.2.40 DECx_DH 169
13.2.41 DECx_DL 170
13.2.42 MULx_X 171
13.2.43 MULx_Y 172
13.2.44 MULx_DH 173
13.2.45 MULx_DL 174
13.2.46 MACx_X/ACCx_DR1 175
13.2.47 MACx_Y/ACCx_DR0 176
13.2.48 MACx_CL0/ACCx_DR3 177
13.2.49 MACx_CL1/ACCx_DR2 178
13.2.50 RDIxRI 179
13.2.51 RDIxSYN 180
13.2.52 RDIxIS 181
13.2.53 RDIxLT0 182
13.2.54 RDIxLT1 184
13.2.55 RDIxRO0 186
13.2.56 RDIxRO1 187
13.2.57 RDIxDSM 188
13.2.58 CUR_PP 189
13.2.59 STK_PP 190
13.2.60 IDX_PP 191
13.2.61 MVR_PP 192
13.2.62 MVW_PP 193
13.2.63 I2Cx_CFG 194
13.2.64 I2Cx_SCR 195
13.2.65 I2Cx_DR 197
13.2.66 I2Cx_MSCR 198
13.2.67 INT_CLR0 199
13.2.68 INT_CLR1 201
13.2.69 INT_CLR2 203
13.2.70 INT_CLR3 204
13.2.71 INT_MSK3 206
13.2.72 INT_MSK2 207
13.2.73 INT_MSK0 208
13.2.74 INT_MSK1 209
13.2.75 INT_VC 210
13.2.76 RES_WDT 211
13.2.77 DEC_CR0 212
13.2.78 DEC_CR1 213
13.2.79 CPU_F 214
13.2.80 IDACx_D 215
13.2.81 CPU_SCR1 216
13.2.82 CPU_SCR0 217
13.3 Bank 1 Registers 218
13.3.1 PRTxDM0 218
13.3.2 PRTxDM1 219

13.3.3 PRTxIC0 220
13.3.4 PRTxIC1 221
13.3.5 DxCxxFN 222
13.3.6 DxCxxIN 224
13.3.7 DxCxxOU 226
13.3.8 DxCxxCR1 (Timer Control:000) 228
13.3.9 DxCxxCR1 (Counter Control:001) 229
13.3.10 DxCxxCR1 (CRCPRS Control:010) 230
13.3.11 DxCxxCR1 (PWMDBL Control:011) 231
13.3.12 DxCxxCR1 (Dead Band Control:100) 232
13.3.13 DxCxxCR1 (SPIM Control:0-110) 233
13.3.14 DxCxxCR1 (SPIS Control:0-110) 234
13.3.15 DxCxxCR1 (DSM Control:111) 235
13.3.16 CLK_CR0 236
13.3.17 CLK_CR1 237
13.3.18 ABF_CR0 238
13.3.19 AMD_CR0 239
13.3.20 CMP_GO_EN 240
13.3.21 CMP_GO_EN1 241
13.3.22 AMD_CR1 242
13.3.23 ALT_CR0 243
13.3.24 ALT_CR1 244
13.3.25 CLK_CR2 245
13.3.26 AMUX_CFG1 246
13.3.27 SADC_TSCR0 247
13.3.28 SADC_TSCR1 248
13.3.29 ACE_AMD_CR0 249
13.3.30 ACE_AMX_IN 250
13.3.31 ACE_CMP_CR0 251
13.3.32 ACE_CMP_CR1 252
13.3.33 ACE_CMP_GI_EN 253
13.3.34 ACE_ALT_CR0 254
13.3.35 ACE_ABF_CR0 255
13.3.36 ACExxCR1 256
13.3.37 ACExxCR2 257
13.3.38 ASExxCR0 258
13.3.39 SADC_TSCMPL 259
13.3.40 SADC_TSCMPH 260
13.3.41 ACE_AMD_CR1 261
13.3.42 ACE_PWM_CR 262
13.3.43 ACE_ADCx_CR 263
13.3.44 ACE_CLK_CR0 264
13.3.45 ACE_CLK_CR1 265
13.3.46 ACE_CLK_CR3 266
13.3.47 DECx_CR0 267
13.3.48 DEC_CR3 268
13.3.49 DEC_CR4 269
13.3.50 DEC_CR5 270
13.3.51 GDI_O_IN_CR 271
13.3.52 GDI_E_IN_CR 272
13.3.53 GDI_O_OU_CR 273
13.3.54 GDI_E_OU_CR 274
13.3.55 RTC_H 275

13.3.56 RTC_M 276
13.3.57 RTC_S 277
13.3.58 RTC_CR 278
13.3.59 SADC_CR0 279
13.3.60 SADC_CR1 280
13.3.61 SADC_CR2 281
13.3.62 SADC_CR3 282
13.3.63 SADC_CR4 283
13.3.64 I2Cx_ADDR 284
13.3.65 AMUX_CLK 285
13.3.66 GDI_O_IN 286
13.3.67 GDI_E_IN 287
13.3.68 GDI_O_OU 288
13.3.69 GDI_E_OU 289
13.3.70 DECx_CR 290
13.3.71 MUX_CRx 291
13.3.72 IDAC_CR1 292
13.3.73 OSC_GO_EN 293
13.3.74 OSC_CR4 294
13.3.75 OSC_CR3 295
13.3.76 OSC_CR0 296
13.3.77 OSC_CR1 297
13.3.78 OSC_CR2 298
13.3.79 VLT_CR 299
13.3.80 VLT_CMP 300
13.3.81 ADCx_TR 301
13.3.82 IDAC_MODE 302
13.3.83 IMO_TR 303
13.3.84 ILO_TR 304
13.3.85 BDG_TR 305
13.3.86 ECO_TR 306
13.3.87 IMO_TR1 307
13.3.88 FLS_PR1 308
13.3.89 IDAC_CR0 309

Section D: Digital System 311

Top-Level Digital Architecture 311
Interpreting the Digital Documentation 311
Digital Register Summary 312

14. Global Digital Interconnect (GDI) 317

14.1 Architectural Description 317
14.1.1 20-Pin Global Interconnect 318
14.1.2 28-Pin Global Interconnect 319
14.1.3 44-Pin Global Interconnect 320
14.1.4 48-Pin Global Interconnect 321
14.1.5 56-Pin Global Interconnect 322
14.2 Register Definitions 322
14.2.1 GDI_x_IN Registers/GDI_x_IN_CR Registers 322
14.2.2 GDI_x_OU/GDI_x_OU_CR Registers 323

15. Array Digital Interconnect (ADI) 325
15.1 Architectural Description 325

16. Row Digital Interconnect (RDI) 327
16.1 Architectural Description 327
16.2 Register Definitions 329
16.2.1 RDIxRI Register 329
16.2.2 RDIxSYN Register 330
16.2.3 RDIxIS Register 331
16.2.4 RDIxLTx Registers 332
16.2.5 RDIxROx Registers 333
16.2.5.1 RDIxRO0 Register 333
16.2.5.2 RDIxRO1 Register 333
16.2.6 RDIxDSM Register 334
16.3 Timing Diagram 334

17. Digital Blocks 335
17.1 Architectural Description 335
17.1.1 Input Multiplexers 336
17.1.2 Input Clock Resynchronization 336
17.1.2.1 Clock Resynchronization Summary 337
17.1.3 Output Demultiplexers 337
17.1.4 Block Chaining Signals 337
17.1.5 Input Data Synchronization 337
17.1.6 Timer Function 337
17.1.6.1 Usability Exceptions 338
17.1.6.2 Block Interrupt 338
17.1.7 Counter Function 338
17.1.7.1 Counter Timing 338
17.1.7.2 Usability Exceptions 339
17.1.7.3 Block Interrupt 339
17.1.8 Dead Band Function 339
17.1.8.1 Usability Exceptions 340
17.1.8.2 Block Interrupt 340
17.1.9 PWMDBL Function 340
17.1.9.1 Usability Exceptions 341
17.1.9.2 Block Interrupt 341
17.1.10 CRCPRS Function 341
17.1.10.1 Usability Exceptions 342
17.1.10.2 Block Interrupt 342
17.1.11 SPI Protocol Function 343
17.1.11.1 SPI Protocol Signal Definitions 343
17.1.12 SPI Master Function 344
17.1.12.1 Usability Exceptions 344
17.1.12.2 Block Interrupt 344
17.1.13 SPI Slave Function 344
17.1.13.1 Usability Exceptions 345
17.1.13.2 Block Interrupt 345
17.1.14 Asynchronous Transmitter and Receiver Functions 345
17.1.14.1 Asynchronous Transmitter Function 345
17.1.14.2 Usability Exceptions 346
17.1.14.3 Block Interrupt 346

17.1.14.4 Asynchronous Receiver Function 346
17.1.14.5 Usability Exceptions 346
17.1.14.6 Block Interrupt 346
17.1.15 DSM function 346
17.1.15.1 Usability Exception 347
17.1.15.2 Block interrupt 347
17.2 Register Definitions 348
17.2.1 DxCxxDRx Registers 349
17.2.1.1 Timer Register Definitions 349
17.2.1.2 Counter Register Definitions 350
17.2.1.3 Dead Band Register Definitions 350
17.2.1.4 PWMDBL Register Definitions 351
17.2.1.5 CRCPRS Register Definitions 351
17.2.1.6 SPI Master Register Definitions 352
17.2.1.7 SPI Slave Register Definitions 352
17.2.1.8 Transmitter Register Definitions 352
17.2.1.9 Receiver Register Definitions 353
17.2.1.10 DSM Register Definitions 353
17.2.2 DxCxxCR0 Register 353
17.2.3 DxCxxCR1 Register 357
17.2.4 INT_MSK1 Register 359
17.2.5 DxCxxFN Registers 360
17.2.6 DxCxxIN Registers 361
17.2.7 DxCxxOU Registers 361
17.3 Timing Diagrams 363
17.3.1 Timer Timing 363
17.3.2 Counter Timing 366
17.3.3 Dead Band Timing 367
17.3.3.1 Changing the PWM Duty Cycle 367
17.3.3.2 Kill Operation 368
17.3.4 PWMDBL Timing 369
17.3.5 CRCPRS Timing 370
17.3.6 SPI Mode Timing 370
17.3.7 SPIM Timing 371
17.3.8 SPIS Timing 374
17.3.9 Transmitter Timing 377
17.3.10 Receiver Timing 379
17.3.11 DSM Timing 382

Section E: Analog System 383

Top Level Analog Architecture 383
Interpreting the Analog Documentation 387
Application Description 387
Defining the Analog Blocks 387
Analog Functionality 388
Analog Register Summary 389

18. Analog Interface 393

18.1 Architectural Description 393
18.1.1 Analog Data Bus Interface 394
18.1.2 Analog Comparator Bus Interface 394
18.1.3 Analog Column Clock Generation 394

18.1.3.1 Column Clock Synchronization....395
18.1.4 Decimator and Incremental ADC Interface....395
18.1.4.1 Decimator....395
18.1.4.2 Incremental ADC....395
18.1.5 Analog Modulator Interface (Mod Bits)....396
18.1.6 Analog Synchronization Interface (Stalling)....396
18.2 Application Description....396
18.2.1 SAR Hardware Acceleration....396
18.2.1.1 Architectural Description....396
18.2.1.2 Application Description....397
18.2.1.3 SAR Timing....399
18.3 Register Definitions....400
18.3.1 CLK_CR3 Register....400
18.3.2 CMP_CR0 Register....401
18.3.3 ASY_CR Register....402
18.3.4 CMP_CR1 Register....403
18.3.5 DEC_CR0 Register....403
18.3.6 DEC_CR1 Register....404
18.3.7 CLK_CR0 Register....404
18.3.8 CLK_CR1 Register....405
18.3.9 AMD_CR0 Register....405
18.3.10 CMP_GO_EN Register....406
18.3.11 CMP_GO_EN1 Register....406
18.3.12 AMD_CR1 Register....407
18.3.13 ALT_CR0 Register....407
18.3.14 ALT_CR1 Register....407
18.3.15 CLK_CR2 Register....408

19. Analog Array 409

19.1 Architectural Description....409
19.1.1 NMux Connections....410
19.1.2 PMux Connections....411
19.1.3 RBotMux Connections....412
19.1.4 AMux Connections....413
19.1.5 CMux Connections....414
19.1.6 BMux SC/SD Connections....415
19.1.7 Analog Comparator Bus....416
19.2 Temperature Sensing Capability....416

20. Analog Input Configuration 417

20.1 Architectural Description....417
20.1.1 Six Column Analog Input Configuration....418
20.2 Register Definitions....419
20.2.1 AMX_IN Register....419
20.2.2 ABF_CR0 Register....420
20.2.3 AMUX_CFG1 Register....420

21. Analog Reference 421

21.1 Architectural Description....421
21.2 Register Definitions....422
21.2.1 ARF_CR Register....422

22. Continuous Time PSoC® Block 425

22.1 Architectural Description 425
22.2 Register Definitions 426
22.2.1 ACCxxCR3 Register 427
22.2.2 ACCxxCR0 Register 429
22.2.3 ACCxxCR1 Register 429
22.2.4 ACCxxCR2 Register 430

23. Switched Capacitor PSoC® Block 431

23.1 Architectural Description....431
23.2 Application Description 433
23.3 Register Definitions 434
23.3.1 ASCxxCR0 Register 435
23.3.2 ASCxxCR1 Register 436
23.3.3 ASCxxCR2 Register 436
23.3.4 ASCxxCR3 Register 437
23.3.5 ASDxxCR0 Register 438
23.3.6 ASDxxCR1 Register 439
23.3.7 ASDxxCR2 Register 439
23.3.8 ASDxxCR3 Register 440

24. Two Column Limited Analog System 441

24.1 Architectural Description 441
24.1.1 Analog Interface 441
24.1.1.1 Analog Comparator Bus Interface 442
24.1.1.2 Analog Column Clock Generation 442
24.1.1.3 Single Slope ADC 442
24.1.1.4 PWM ADC Interface....444
24.1.1.5 Analog Modulator Interface (Mod Bits) 444
24.1.1.6 Sample and Hold Feature 444
24.1.2 Analog Array 445
24.1.2.1 NMux Connections 445
24.1.2.2 PMux Connections 446
24.1.2.3 Temperature Sensing Capability 446
24.1.3 Analog Input Configuration 446
24.1.4 Analog Reference 450
24.1.5 Continuous Time PSoC Block 450
24.1.6 Switched Capacitor PSoC Block 450
24.1.6.1 Application Description for the SC Block....450
24.2 PSoC Device Distinctions....450
24.3 Register Definitions 452
24.3.1 Summary Table for Two Column Limited Analog System Registers 452
24.3.2 DEC_CR0 Register....453
24.3.3 DEC_CR1 Register....453
24.3.4 ADCx_TR Register 454
24.3.5 ACE_AMD_CR0 Register 454
24.3.6 ACE_AMX_IN Register 454
24.3.7 ACE_CMP_CR0 Register 455
24.3.8 ACE_CMP_CR1 Register 455
24.3.9 ACE_CMP_GI_EN Register 455
24.3.10 ACE_ALT_CR0 Register 456

24.3.11 ACE_ABF_CR0 Register 456
24.3.12 ACExxCR1 Register 456
24.3.13 ACExxCR2 Register 457
24.3.14 ASExxCR0 Register 457
24.3.15 ACE_AMD_CR1 Register 457
24.3.16 ACE_PWM_CR Register 458
24.3.17 ACE_ADCx_CR Register 458
24.3.18 ACE_CLK_CR0 Register 459
24.3.19 ACE_CLK_CR1 Register 459
24.3.20 ACE_CLK_CR3 Register 459

Section F: System Resources 461

Top-Level System Resources Architecture 461
Interpreting the System Resources Documentation 461
System Resources Register Summary 462

25. Digital Clocks 465

25.1 Architectural Description 465
25.1.1 Internal Main Oscillator 465
25.1.2 Internal Low Speed Oscillator 465
25.1.3 32.768 kHz Crystal Oscillator 467
25.1.4 External Clock 467
25.1.4.1 Clock Doubler 467
25.1.4.2 Switch Operation 467
25.2 Register Definitions 469
25.2.1 INT_CLR0 Register 469
25.2.2 INT_MSK0 Register 469
25.2.3 OSC_GO_EN Register 470
25.2.4 OSC_CR4 Register 471
25.2.5 OSC_CR3 Register 472
25.2.6 OSC_CR0 Register 473
25.2.7 OSC_CR1 Register 474
25.2.8 OSC_CR2 Register 475

26. Multiply Accumulate (MAC) 477

26.1 Architectural Description 477
26.2 Application Description 478
26.2.1 Multiplication with No Accumulation 478
26.2.2 Accumulation After Multiplication 478
26.3 Register Definitions 478
26.3.1 MULx_X Register 479
26.3.2 MULx_Y Register 479
26.3.3 MULx_DH Register 479
26.3.4 MULx_DL Register 480
26.3.5 MACx_X/ACCx_DR1 Register 480
26.3.6 MACx_Y/ACCx_DR0 Register 480
26.3.7 MACx_CL0/ACCx_DR3 Register 481
26.3.8 MACx_CL1/ACCx_DR2 Register 481

27. Decimator 483

27.1 Architectural Description 483
27.1.1 Type 2 Decimator Block 483

27.1.1.1 Dedicated Data/Clock Input Selections for Single Decimator Row 485
27.1.1.2 Single External Decimation Clock Supports Four Decimators 486
27.1.1.3 Single Incremental Gating Clock Supports Six Analog Compare Outputs 486
27.1.1.4 ACC/ACE Interrupts Replacement 487
27.2 Register Definitions 488
27.2.1 DECx_DH Register 488
27.2.2 DECx_DL Register 488
27.2.3 DEC_CR0 Register 489
27.2.4 DEC_CR1 Register 489
27.2.5 DECx_CR0 Register 490
27.2.6 DEC_CR3 Register 490
27.2.7 DEC_CR4 Register 491
27.2.8 DEC_CR5 Register 491
27.2.9 DECx_CR Registers 492

28. I²C 493

28.1 Architectural Description 493
28.1.1 Dual I2C HW 493
28.1.2 Basic I²C Data Transfer 494
28.2 Application Description 494
28.2.1 Slave Operation 494
28.2.2 Master Operation 496
28.3 Register Definitions 497
28.3.1 I2Cx_ADDR Register 497
28.3.2 I2Cx_CFG Register 498
28.3.3 I2Cx_SCR Register 500
28.3.4 I2Cx_DR Register 502
28.3.5 I2Cx_MSCR Register 502
28.4 PSoC Device Distinctions 504
28.5 Timing Diagrams 504
28.5.1 Clock Generation 504
28.5.2 Basic Input/Output Timing 505
28.5.3 Status Timing 505
28.5.4 Master Start Timing 506
28.5.5 Master Restart Timing 508
28.5.6 Master Stop Timing 508
28.5.7 Master/Slave Stall Timing 509
28.5.8 Master Lost Arbitration Timing 509
28.5.9 Master Clock Synchronization 510

29. Internal Voltage Reference 511

29.1 Architectural Description 511
29.2 Register Definitions 511
29.2.1 BDG_TR Register 511

30. System Resets 513

30.1 Architectural Description 513
30.2 Pin Behavior During Reset 513
30.2.1 GPIO Behavior on Power Up 513
30.2.2 GPIO Behavior on External Reset 513
30.3 Register Definitions 514
30.3.1 CPU_SCR1 Register 514

30.3.2 CPU_SCR0 Register 515
30.4 Timing Diagrams 516
30.4.1 Power On Reset 516
30.4.2 External Reset 516
30.4.3 Watchdog Timer Reset 516
30.4.4 Reset Details 518
30.5 Power Consumption 518

31. Switch Mode Pump (SMP) 519

31.1 Architectural Description 519
31.2 Application Description 520
31.2.1 Component Value Selection 520
31.3 Register Definitions 521
31.3.1 VLT_CR Register 521

32. POR and LVD 523

32.1 Architectural Description 523
32.2 Register Definitions 523
32.2.1 VLT_CR Register 523
32.2.2 VLT_CMP Register 524

33. I/O Analog Multiplexer 525

33.1 Architectural Description 525
33.1.1 IOMUX and GPIO 525
33.1.2 Dual Channel 8-Bit IDAC 525
33.2 PSoC Device Distinctions 526
33.3 Application Description 526
33.3.1 Capacitive Sensing 526
33.3.2 Chip-Wide Analog Input 528
33.3.3 Crosspoint Switch 528
33.3.4 Charging Current 528
33.4 Register Definitions 528
33.4.1 AMUX_CFG Register 528
33.4.2 IDAC1_D Register 529
33.4.3 IDAC0_D Register 529
33.4.4 AMUX_CFG1 Register 529
33.4.5 AMUX_CLK Register 530
33.4.6 MUX_CRx Registers 530
33.4.7 IDAC_MODE 531
33.4.8 IDAC_CR0 Register 531
33.4.9 IDAC_CR1 Register 531

34. Real Time Clock (RTC) 533

34.1 Architectural Description 533
34.1.1 BCD Code Counter 533
34.1.2 Writing RTC Data 533
34.1.3 Reading RTC Data 533
34.1.4 General Timer 534
34.2 Register Definitions 534
34.2.1 RTC_H 534
34.2.2 RTC_M 534
34.2.3 RTC_S 534

34.2.4 RTC_CR 535

35. 10-Bit SAR ADC Controller 537

35.1 Architectural Description 537
35.1.1 ADC Clock Generation 537
35.1.2 Voltage Doubler Clock Generation 538
35.1.3 ADC FSM 538
35.1.4 SAR Algorithm and Data Process 538
35.1.5 A-D-C Operation Mode 539
35.1.6 ‘Ready’ Bit, ‘Ongoing’ Bit and Interrupt 540
35.1.7 Converted Data Format and Read Sequence 540
35.2 Application Description 540
35.2.1 ADC Sample Rate and Clock Selection 540
35.2.2 Voltage Doubler Enable 540
35.2.3 Reference Selection 540
35.3 Register Definitions 541
35.3.1 SADC_DH 541
35.3.2 SADC_DL 541
35.3.3 SADC_TSCR0 541
35.3.4 SADC_TSCR1 542
35.3.5 SADC_TSCMPL 542
35.3.6 SADC_TSCMPH 542
35.3.7 SADC_CR0 543
35.3.8 SADC_CR1 543
35.3.9 SADC_CR2 544
35.3.10 SADC_CR3 544
35.3.11 SADC_CR4 544
35.4 PSoC Device Distinctions 544
35.5 Clocking 544

Section H: Glossary 545

Index 561

Section A: Overview

The PSoC® platform consists of many Programmable System-on-Chip devices. As described in this technical reference manual (TRM), a PSoC device includes configurable blocks of analog circuits and ***digital logic***, as well as programmable interconnect. This architecture allows the user to create customized peripheral configurations, to match the requirements of each individual application. Additionally, a fast CPU, Flash program memory, SRAM data memory, and configurable input/output (I/O) are included in a range of pinouts.

This document is a technical reference manual for all PSoCs with a base part number of CY8C28xxx. To use this manual effectively, you must know how many digital rows and how many analog columns your PSoC device has (see the PSoC Device Characteristics table on page 24) and be aware of your PSoC device's distinctions (see the PSoC Device Distinctions on page 25). For the most up-to-date Ordering, Pinout, Packaging, or Electrical Specification information, refer to the individual PSoC device's data sheet. For the most current technical reference manual information, refer to the addendum. To obtain the newest product documentation, go to the Cypress web site at http://www.cypress.com/psoc. This section encompasses the following chapter:

- Pin Information on page 29

Document Organization

This manual is organized into sections and chapters, according to ***PSoC®*** functionality. Each section begins with documentation interpretation, a top-level architectural explanation, PSoC device distinctions (if relevant), and a register summary (if applicable). Most chapters within the sections have an introduction, an architectural/application description, PSoC device distinctions (if relevant), register definitions, and timing diagrams. The sections are as follows:

- **Overview** – Presents the PSoC top-level architecture, PSoC device characteristics and distinctions, how to get started with helpful information, and document history and conventions. The PSoC device ***pinouts*** are detailed in the Pin Information chapter on page 29.
- **PSoC Core** – Describes the heart of the PSoC device in various chapters, beginning with an architectural overview and a summary list of registers pertaining to the PSoC core. See "PSoC® Core" on page 35.
- **Register Reference** – Lists all PSoC device registers in Register Mapping Tables, on page 109, and presents bit-level detail of each PSoC register in its own Register Details chapter on page 125. Where applicable, detailed register descriptions are also located in each chapter.
- **Digital System** – Describes the configurable PSoC digital system in various chapters, beginning with an architectural overview and a summary list of registers pertaining to the digital system. See the "Digital System" on page 311.
- **Analog System** – Describes the configurable PSoC analog system in various chapters, beginning with an architectural overview and a summary list of registers pertaining to the analog system. See the "Analog System" on page 383.
- **System Resources** – Presents additional PSoC system resources, depending on the PSoC device, beginning with an overview and a summary list of registers pertaining to system resources. See "System Resources" on page 461.
- **Glossary** – Defines the specialized terminology used in this manual. Glossary terms are presented in ***bold, italic font*** throughout this manual. See the "Glossary" on page 545.
- **Index** – Lists the location of key topics and elements that constitute and empower the PSoC device. See the "Index" in the TRM.

Top Level Architecture

The PSoC block diagram on the next page illustrates the top level architecture of the CY8C28xxx family of PSoC devices. Each major grouping in the diagram is covered in this manual in its own section: PSoC Core, Digital System, Analog System, and the System Resources. Banding these four main areas together is the communication network of the system ***bus***.

PSoC Core

The PSoC Core is a powerful engine that supports a rich instruction set. It encompasses the ***SRAM*** for data storage, an ***interrupt*** controller for easy program execution to new addresses, sleep and watchdog timers, and multiple ***clock*** sources that include the phase locked loop (PLL), IMO (internal main oscillator), ILO (internal low speed oscillator), and ECO (32.768 kHz external crystal oscillator) for precision, programmable clocking. The clocks, together with programmable clock dividers (as a System Resource), provide the flexibility to integrate almost any timing requirement into the PSoC device.

The CPU core, called the M8C, is a powerful processor with speeds up to 24 MHz. The M8C is a four MIPS 8-***bit*** Harvard architecture microprocessor. Within the CPU core are the ***SROM*** and ***Flash*** memory components that provide flexible programming. The smallest PSoC devices have a slightly different analog configuration.

PSoC GPIOs provide connection to the CPU, digital and analog resources of the device. Each pin's drive mode may be selected from eight options, allowing great flexibility in external interfacing. Every pin also has the capability to generate a system interrupt on high level, low level, and change from last read.

Digital System

The Digital System is composed of digital rows in a block ***array***, and the Global, Array, and Row Digital Interconnects (GDI, ADI, and RDI, respectively). Digital blocks are provided in rows of four, where the number of blocks varies by PSoC device (see "PSoC Device Characteristics" on page 24). This allows you the optimum choice of system resources for your application.

The digital blocks can be connected to any GPIO through a series of global buses that can route any signal to any pin. The buses also allow for signal multiplexing and for performing logic operations. This configurability frees your designs from the constraints of a fixed peripheral controller.

Analog System

The Analog System is composed of analog columns in a block array, analog references, analog ***input*** muxing, and analog drivers. The analog system block is composed of up to four analog columns with up to 12 analog blocks, depending on the characteristics of your PSoC device (see "PSoC Device Characteristics" on page 24). Each configurable block is comprised of an opamp circuit allowing the creation of complex analog signal flows.

Each analog column contains one Continuous Time (CT) block, Type C (ACC); one Switched Capacitor (SC) block, Type C (ASC); and one Switched Capacitor block, Type D (ASD). Two of the analog columns in the CY8C28x13, CY8C28x33, CY8C28x45, and CY8C28x52 PSoC devices each contain one Type E CT block (ACE) and one Type E SC block (ASE), as described in the Two Column Limited Analog System chapter on page 441.

System Resources

The System Resources provide additional PSoC capability, depending on the features of your PSoC device (see the table titled "Availability of System Resources for CY8C28xxx Devices" on page 24). These system resources include:

- Digital clocks to increase the flexibility of the PSoC ***mixed-signal*** arrays.
- Up to two multiply accumulates (MACs) that provide fast 8-bit multipliers or fast 8-bit multipliers with 32-bit accumulate.
- Up to two decimators for digital ***signal*** processing applications.
- ***I^2C*** functionality for implementing either I^2C slave or master.
- An internal voltage reference that provides an absolute value of 1.3 V to a variety of PSoC subsystems.
- A switch mode pump (SMP) that generates normal operating voltages off a single battery cell.
- An enhanced analog multiplexer (mux) that allows every I/O pin to connect to a common internal analog mux bus.
- A five endpoint full-speed (12 Mbps) USB device.
- Various system resets supported by the M8C.

PSoC Top-Level Block Diagram

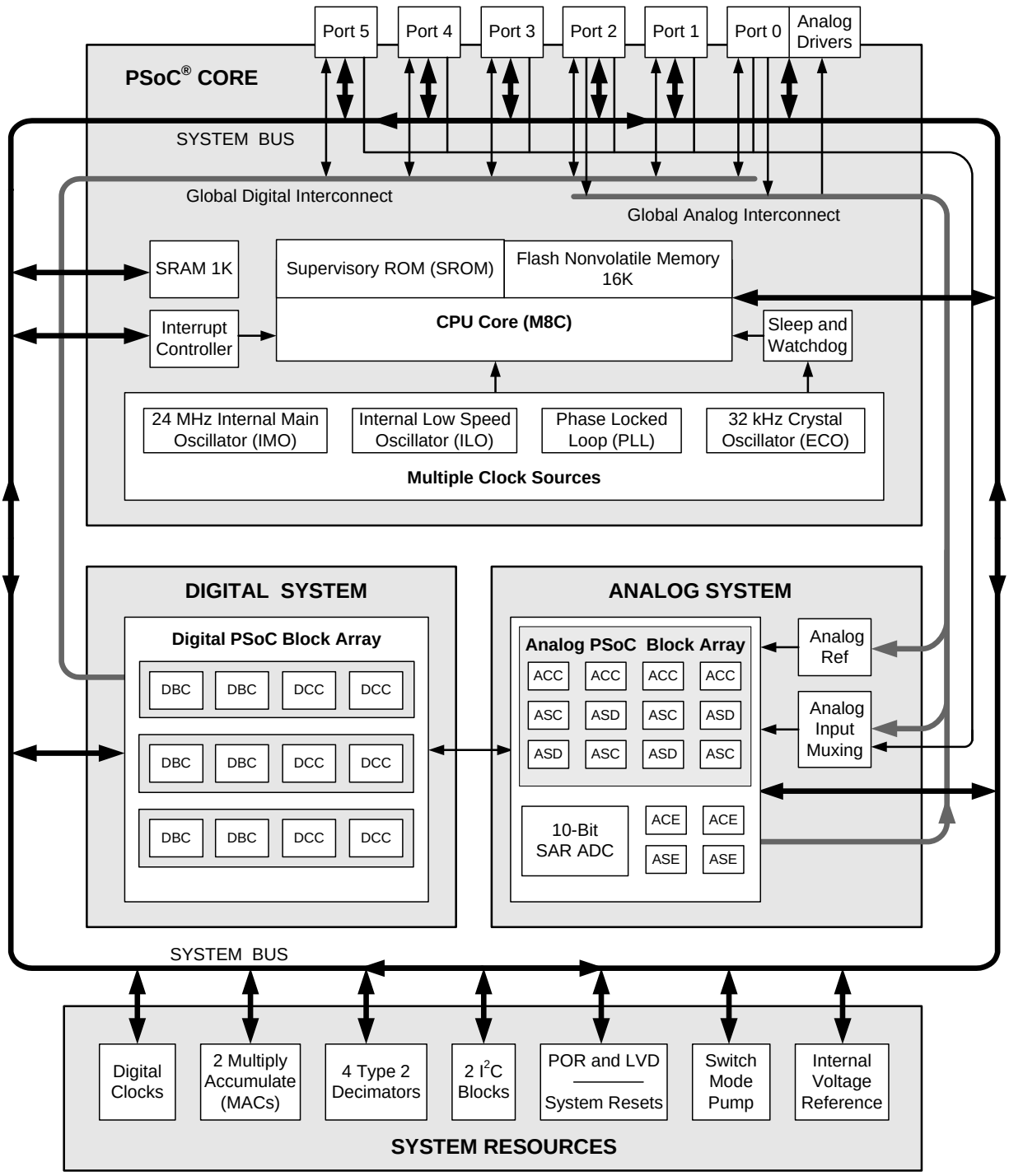

PSoC Device Characteristics

There are a number of parts in the CY8C28xxx PSoC Programmable System-on-Chip family. Besides differentiating these by way of part numbers, each part is easily distinguished by the unique number of digital rows and/or analog columns it has. This unique characteristic is the foundation for how this manual presents information.

The ***digital*** system can have 3 or 2 digital rows. The ***analog*** system can have 4, 2, or 0 regular analog columns. Additionally, some CY8C28xxx devices have two additional Type-E analog columns. Each PSoC device has a unique combination of digital rows and analog columns. The following table lists the device characteristics for specific CY8C28xxx device groups. Remember the particular CY8C28xxx device characteristics when referencing functionality in this manual.

CY8C28xxx Device Characteristics

PSoC Part Number	CapSense	Digital Blocks	Regular Analog Blocks	Limited Analog Blocks	HW I^2C	Decimators	Digital IO	Analog Inputs	Analog Outputs
CY8C28x03	N	12	0	0	2	0	up to 24	up to 8	0
CY8C28x13	Y	12	0	4	1	2	up to 40	up to 40	0
CY8C28x23	N	12	6	0	2	2	up to 44	up to 10	2
CY8C28x33	Y	12	6	4	1	4	up to 40	up to 40	2
CY8C28x43	N	12	12	0	2	4	up to 44	up to 44	4
CY8C28x45	Y	12	12	4	2	4	up to 44	up to 44	4
CY8C28x52	Y	8	12	4	1	4	up to 24	up to 24	4

The following table lists the resources available for specific CY8C28xxx device groups. The check mark or appropriate information denotes that a system resource is available for the device. Blank fields indicate that the system resource is not available. These resources are detailed in the section titled “System Resources” on page 461.

Availability of System Resources for CY8C28xxx Devices

CY8C28xxx Part Number	Digital Clocks	I^2C	Internal Voltage Ref	POR and LVD	System Resets	Multiply Accumulate	CapSense	SAR10 ADC	XRES Pin	Decimators
CY8C28x03	✓	2	✓	✓	✓	2		✓	✓	0
CY8C28x13	✓	1	✓	✓	✓	2	✓	✓	✓	2
CY8C28x23	✓	2	✓	✓	✓	2			✓	2
CY8C28x33	✓	1	✓	✓	✓	2	✓	✓	✓	4
CY8C28x43	✓	2	✓	✓	✓	2		✓	✓	4
CY8C28x45	✓	2	✓	✓	✓	2	✓	✓	✓	4
CY8C28x52	✓	1	✓	✓	✓	2	✓			4

PSoC Device Distinctions

The PSoC Programmable System-on-Chip device distinctions are listed in the following table and in each chapter section where it is appropriate. The PSoC device distinctions are significant exceptions or differences between CY8C28xxx PSoC groups and devices. They represent a unique difference from the information otherwise presented in this manual which encompasses all CY8C28xxx PSoC devices.

PSoC Device Distinctions

Device Distinctions	Devices Affected	Described in Chapter
GPIO Pins: The CY8C28x13, CY8C28x33, CY8C28x43, CY8C28x45, and CY8C28x52 PSoC devices differ from the other CY8C28xxx PSoC devices in that GPIO pins can connect to the internal analog bus.	CY8C28x13 CY8C28x33 CY8C28x43 CY8C28x45 CY8C28x52	I/O Analog Multiplexer chapter on page 525
Interrupt Differences exist between CY8C28xxx device groups.	All	Interrupt Controller chapter on page 65
I2C1 Hardware Resource Availability. Some CY8C28xxx groups do not have a second hardware I^2C resource (I2C1). The following registers are reserved for these devices: I2C1_DR, I2C1_SCR, I2C1_MSCR, I2C1_CFG, I2C1_ADDR.	CY8C28x13 CY8C28x33 CY8C28x52	I^2C chapter on page 493
Dedicated 10-bit SAR ADC Availability. Some CY8C28xxx groups do not have a dedicated 10-bit SAR ADC. The following registers are reserved for these devices: SADC_DH, SADC_DL, SADC_TSCR0, SADC_TSCR1, SADC_TSCMPL, SADC_TSCMPH, SADC_CR0, SADC_CR1, SADC_CR2, SADC_CR3, SADC_CR4.	CY8C28x23 CY8C28x52	10-Bit SAR ADC Controller chapter on page 537
Limited Decimator Availability. Some CY8C28xxx groups only have 2 decimator resources. The following registers are reserved for these devices: DEC2_DH, DEC2_DL, DEC3_DH, DEC3_DL, DEC_CR4, DEC2_CR0, DEC3_CR0, DEC2_CR, DEC3_CR.	CY8C28x13 CY8C28x23	Decimator chapter on page 483
No Decimator Availability. Some CY8C28xxx groups have no decimator resources. The following registers are reserved for these devices: DEC0_DH, DEC0_DL, DEC1_DH, DEC1_DL, DEC2_DH, DEC2_DL, DEC3_DH, DEC3_DL, DEC_CR0, DEC_CR1, DEC_CR3, DEC_CR4, DEC_CR5, DEC0_CR0, DEC1_CR0, DEC2_CR0, DEC3_CR0, DEC0_CR, DEC1_CR, DEC2_CR, DEC3_CR.	CY8C28x03	Decimator chapter on page 483

Getting Started

The quickest path to understanding PSoC is by reading the PSoC device's data sheet and using the PSoC Designer™ Integrated Development Environment (IDE). This manual is useful for understanding the details of the PSoC integrated circuit.

Important Note: For the most up-to-date Ordering, Packaging, or Electrical Specification information, refer to the individual PSoC device's data sheet or go to http://www.cypress.com/psoc.

Support

Free support for PSoC products is available online at http://www.cypress.com. Resources include Training Seminars, Discussion Forums, Application Notes, PSoC Consultants, TightLink Technical Support Email/Knowledge Base, and Application Support Technicians.

Technical Support can be reached at http://www.cypress.com/support/login.cfm or can be contacted by phone at: 1-800-541-4736.

Product Upgrades

Cypress provides scheduled upgrades and version enhancements for PSoC Designer free of charge. You can order the upgrades from your distributor on CD-ROM or download them directly from http://www.cypress.com under Software and Drivers. Also provided are critical updates to system documentation under Design Support > Design Resources > More Resources or go to http://www.cypress.com.

Development Kits

Development Kits are available from the following distributors: Digi-Key, Avnet, Arrow, and Future. The Cypress Online Store contains development kits, ***C*** compilers, and all accessories for PSoC development. Go to the Cypress Online Store web site at http://www.cypress.com, click the Online Store shopping cart icon at the bottom of the web page, and click *PSoC (Programmable System-on-Chip)* to view a current list of available items.

Document History

This section serves as a chronicle of the CY8C28xxx *PSoC Programmable System-on-Chip Technical Reference Manual*.

PSoC Technical Reference Manual History

Version/	Originator	Description of Change
001-52594, Rev. **	DSG	Initial release
001-52594, Rev. *A	DSG	Addressed multiple CDTs. Changes throughout document.
001-52594, Rev. *B	DSG	CDTs 49952, 49275, 49280, 53590, 52998, 52995
001-52594, Rev. *C	DSG	CDT 58791
001-52594, Rev. *D	VED	CDT 66721
001-52594, Rev. *E	SHEA	CDT 131854
001-52594, Rev. *F	RJVB	CDT 145093
001-52594, Rev. *G	GNKK	CDT 193600 Added note on Interrupt-on-change behavior. Added explanation on BLOCKID parameter for the Checksum supervisory function. Added information on external clock requirements for running the device.

Documentation Conventions

There are only four distinguishing font types used in this manual, besides those found in the headings.

- The first is the use of *italics* when referencing a document title or file name.
- The second is the use of ***bold italics*** when referencing a term described in the Glossary of this manual.
- The third is the use of Times New Roman font, distinguishing equation examples.
- The fourth is the use of `Courier New` font, distinguishing code examples.

Register Conventions

The following table lists the register conventions that are specific to this manual. A more detailed set of register conventions is located in the Register Details chapter on page 125.

Register Conventions

Convention	Example	Description
'x' in a register name	ACCxxCR1	Multiple instances/address ranges of the same register
R	R : 00	Read register or bit(s)
W	W : 00	Write register or bit(s)
L	RL : 00	Logical register or bit(s)
C	RC : 00	Clearable register or bit(s)
00	RW : 00	Reset value is 0x00 or 00h
XX	RW : XX	Register is not reset
0,	0,04h	Register is in bank 0
1,	1,23h	Register is in bank 1
x,	x,F7h	Register exists in register bank 0 and register bank 1
Empty, grayed-out table cell		Reserved bit or group of bits, unless otherwise stated

Numeric Naming

Hexadecimal numbers are represented with all letters in uppercase with an appended lowercase 'h' (for example, '14h' or '3Ah') and ***hexadecimal*** numbers may also be represented by a '0x' prefix, the ***C*** coding convention. Binary numbers have an appended lowercase 'b' (for example, 01010100b' or '01000011b'). Numbers not indicated by an 'h' or 'b' are ***decimal***.

Units of Measure

The following table lists the units of measure used in this manual.

Units of Measure

Symbol	Unit of Measure
°C	degrees Celsius
dB	decibels
fF	femtofarads
Hz	hertz
k	kilo, 1000
K	2^{10}, 1024
KB	1024 bytes
Kbit	1024 bits
kHz	kilohertz (32.000)
kΩ	kilohms
MHz	megahertz
MΩ	megaohms
µA	microamperes
µF	microfarads
µs	microseconds
µV	microvolts
µVrms	microvolts root-mean-square
mA	milliamperes
ms	millisecond
mV	millivolts
nA	nanoamperes
ns	nanoseconds
nV	nanovolts
Ω	ohms
pF	picofarads
pp	peak-to-peak
ppm	parts per million
sps	samples per second
σ	sigma: one standard deviation
V	volts

Acronyms

The following table lists the acronyms that are used in this manual.

Acronyms

Acronym	Description
ABUS	analog output bus
AC	alternating current
ADC	analog-to-digital converter
API	Application Programming Interface
BC	broadcast clock
BR	bit rate
BRA	bus request acknowledge
BRQ	bus request
CBUS	comparator bus
CI	carry in
CMP	compare
CO	carry out
CPU	central processing unit
CRC	cyclic redundancy check
CT	continuous time
DAC	digital-to-analog converter
DC	direct current
DI	digital or data input
DMA	direct memory access
DO	digital or data output
ECO	external crystal oscillator
FB	feedback
GIE	global interrupt enable
GPIO	general purpose I/O
ICE	in-circuit emulator
IDE	integrated development environment
ILO	internal low speed oscillator
IMO	internal main oscillator
I/O	input/output
IOR	I/O read
IOW	I/O write
IPOR	imprecise power on reset
IRQ	interrupt request
ISR	interrupt service routine
ISSP	in system serial programming
IVR	interrupt vector read
LFSR	linear feedback shift register
LRb	last received bit
LRB	last received byte
LSb	least significant bit
LSB	least significant byte
LUT	look-up table
MISO	master-in-slave-out
MOSI	master-out-slave-in
MSb	most significant bit
MSB	most significant byte

Acronyms *(continued)*

Acronym	Description
PC	program counter
PCH	program counter high
PCL	program counter low
PD	power down
PMA	PSoC™ memory arbiter
POR	power on reset
PPOR	precision power on reset
PRS	pseudo random sequence
PSoC®	Programmable System-on-Chip
PSSDC	power system sleep duty cycle
PWM	pulse width modulator
RAM	random access memory
RETI	return from interrupt
RI	row input
RO	row output
ROM	read only memory
RW	read/write
SAR	successive approximation register
SC	switched capacitor
SIE	serial interface engine
SE0	single-ended zero
SOF	start of frame
SP	stack pointer
SPI	serial peripheral interconnect
SPIM	serial peripheral interconnect master
SPIS	serial peripheral interconnect slave
SRAM	static random access memory
SROM	supervisory read only memory
SSADC	single slope ADC
SSC	supervisory system call
TC	terminal count
USB	universal serial bus
WDT	watchdog timer
WDR	watchdog reset
XRES	external reset

1. Pin Information

This chapter lists, describes, and illustrates all CY8C28xxx PSoC device pins and pinout configurations. For up-to-date Ordering, Pinout, and Packaging information, refer to the individual PSoC device's data sheet or go to: http://www.cypress.com/psoc.

This chapter encompasses the following:

- Pinouts for the CY8C28xxx on page 29

1.1 Pinouts for the CY8C28xxx

The CY8C28xxx PSoC devices are available in a variety of packages. Refer to the following information for details on individual devices. Every port pin (labeled with a “P”), except for Vss, Vdd, and XRES in the following tables and illustrations, is capable of Digital I/O and Analog Mux Bus (L or R).

1.1.1 20-Pin Part Pinouts

Table 1-1. 20-Pin Part Pinout (SSOP)

Pin No.	Type		Pin Name	Description
	Digital	Analog		
1	I/O	I, M, S	P0[7]	Analog column mux input; Integration Cap for MR; ADC input channel.
2	I/O	I/O, M, S	P0[5]	Analog column mux input and column output; Integration Cap for ML; ADC input channel.
3	I/O	I/O, M, S	P0[3]	Analog column mux input and column output; ADC input channel.
4	I/O	I, M, S	P0[1]	Analog column mux input; ADC input channel.
5	Output		SMP	Switch Mode Pump (SMP) connection to required external components.
6	I/O	M	P1[7]	I^2C Serial Clock (SCL)
7	I/O	M	P1[5]	I^2C Serial Data (SDA)
8	I/O	M	P1[3]	
9	I/O	M	P1[1]*	Crystal (XTALin), I^2C Serial Clock (SCL)
10	Power		Vss	Ground connection.
11	I/O	M	P1[0]*	Crystal (XTALout), I^2C Serial Data (SDA)
12	I/O	M	P1[2]	
13	I/O	M	P1[4]	Optional External Clock Input (EXTCLK)
14	I/O	M	P1[6]	
15	Input		XRES	Active high pin reset with internal pull down.
16	I/O	I, M, S	P0[0]	Analog column mux input; ADC input channel.
17	I/O	I/O, M, S	P0[2]	Analog column mux input and column output; ADC input channel.
18	I/O	I/O, M, S	P0[4]	Analog column mux input and column output; ADC input channel.
19	I/O	I, M, S	P0[6]	Analog column mux input; ADC input channel.
20	Power		Vdd	Supply voltage.

CY8C28243 PSoC Device

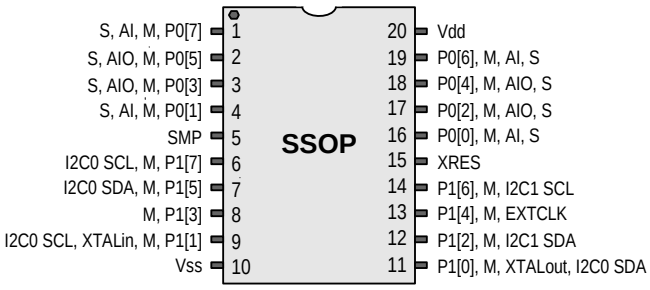

LEGEND A = Analog, I = Input, O = Output, S = SAR ADC Input, and M = Analog Mux Bus Input.
* These are the ISSP pins, which are not High Z at POR (Power On Reset).

1.1.2 28-Pin Part Pinouts

Table 1-2. 28-Pin Part Pinout (SSOP)

Pin No.	Type		Pin Name	Description
	Digital	Analog		
1	I/O	I, M, S	P0[7]	Analog column mux and SAR ADC input[a]
2	I/O	I/O, M, S	P0[5]	Analog column mux and SAR ADC input. Analog column output[a, b]
3	I/O	I/O, M, S	P0[3]	Analog column mux and SAR ADC input. Analog column output[a, b]
4	I/O	I, M, S	P0[1]	Analog column mux and SAR ADC input[a]
5	I/O	M	P2[7]	
6	I/O	M	P2[5]	
7	I/O	I, M	P2[3]	Direct switched capacitor block input[c]
8	I/O	I, M	P2[1]	Direct switched capacitor block input[c]
9	Output		SMP	Switch Mode Pump (SMP) connection to external components.
10	I/O	M	P1[7]	I2C0 Serial Clock (SCL).
11	I/O	M	P1[5]	I2C0 Serial Data (SDA).
12	I/O	M	P1[3]	
13	I/O	M	P1[1]*	Crystal Input (XTALin), I2C0 Serial Clock (SCL), ISSP-SCLK
14	Power		Vss	Ground connection.
15	I/O	M	P1[0]*	Crystal Output (XTALout), I2C0 Serial Data (SDA), ISSP-SDATA
16	I/O	M	P1[2]	I2C1 Serial Data (SDA)[d]
17	I/O	M	P1[4]	Optional External Clock Input (EXT-CLK).
18	I/O	M	P1[6]	I2C1 Serial Clock (SCL)[d]
19	Input		XRES	Active high external reset with internal pull down.
20	I/O	I, M	P2[0]	Direct switched capacitor block input[e]
21	I/O	I, M	P2[2]	Direct switched capacitor block input[e]
22	I/O	M	P2[4]	External Analog Ground (AGND).
23	I/O	M	P2[6]	External Voltage Reference (VRef).
24	I/O	I, M, S	P0[0]	Analog column mux and SAR ADC input[a]
25	I/O	I/O, M, S	P0[2]	Analog column mux and SAR ADC input. Analog column output[a, f]
26	I/O	I/O, M, S	P0[4]	Analog column mux and SAR ADC input. Analog column output[a, f]
27	I/O	I, M, S	P0[6]	Analog column mux and SAR ADC input[a]
28	Power		Vdd	Supply voltage.

CY8C28403, CY8C28413, CY8C28433, CY8C28445, and CY8C28452 28-Pin PSoC Devices

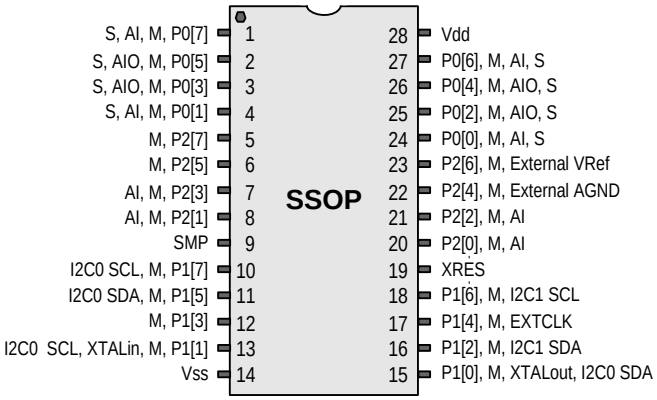

LEGEND A = Analog, I = Input, O = Output, S = SAR ADC Input, and M = Analog Mux Bus Input.
* These are the ISSP pins, which are not High Z at POR (Power On Reset).

a. CY8C28x52 and CY8C28x23 devices do not have a SAR ADC. Therefore, this pin does not function as a SAR ADC input for these devices.
b. CY8C28x13 and CY8C28x03 devices do not have any analog output buffers. Therefore, this pin does not function as an analog column output for these devices.
c. This pin is not a direct switched capacitor block analog input for CY8C28x03 and CY8C28x13 devices.
d. CY8C28x52, CY8C28x13, and CY8C28x33 devices only have one I^2C block. Therefore, this GPIO does not function as an I^2C pin for these devices.
e. This pin is not a direct switched capacitor block analog input for CY8C28x03, CY8C28x13, CY8C28x23, and CY8C28x33 devices.
f. CY8C28x33, CY8C28x23, CY8C28x13, and CY8C28x03 devices do not have an analog output buffer for this pin. Therefore, this pin does not function as an analog column output for these devices.

1.1.3 44-Pin Part Pinouts

Table 1-3. 44-Pin Part Pinout (TQFP)

Pin No.	Type		Pin Name	Description
	Digital	Analog		
1	I/O	M	P2[5]	
2	I/O	I, M	P2[3]	Direct switched capacitor block input.
3	I/O	I, M	P2[1]	Direct switched capacitor block input.
4	I/O	M	P4[7]	
5	I/O	M	P4[5]	
6	I/O	M	P4[3]	
7	I/O	M	P4[1]	
8	Output		SMP	Switch Mode Pump (SMP) connection to external components.
9	I/O	M	P3[7]	
10	I/O	M	P3[5]	
11	I/O	M	P3[3]	
12	I/O	M	P3[1]	
13	I/O	M	P1[7]	I2C0 Serial Clock (SCL)
14	I/O	M	P1[5]	I2C0 Serial Data (SDA)
15	I/O	M	P1[3]	
16	I/O	M	P1[1]*	Crystal (XTALin), I2C0 Serial Clock (SCL), ISSP-SCLK
17	Power		Vss	Ground connection
18	I/O	M	P1[0]*	Crystal (XTALout), I2C0 Serial Data (SDA), ISSP-SDATA
19	I/O	M	P1[2]	I2C1 Serial Data (SDA)[a]
20	I/O	M	P1[4]	Optional External Clock Input (EXTCLK)
21	I/O	M	P1[6]	I2C1 Serial Clock (SCL)[a]
22	I/O	M	P3[0]	I2C1 Serial Data (SDA)[a]
23	I/O	M	P3[2]	I2C1 Serial Clock (SCL)[a]
24	I/O	M	P3[4]	
25	I/O	M	P3[6]	
26	Input		XRES	Active high pin reset with internal pull down.
27	I/O	M	P4[0]	
28	I/O	M	P4[2]	
29	I/O	M	P4[4]	
30	I/O	M	P4[6]	
31	I/O	I, M	P2[0]	Direct switched capacitor block input[e]
32	I/O	I, M	P2[2]	Direct switched capacitor block input[e]
33	I/O	M	P2[4]	External Analog Ground (AGND) input.

CY8C28513, CY8C28533, and CY8C28545 PSoC Devices

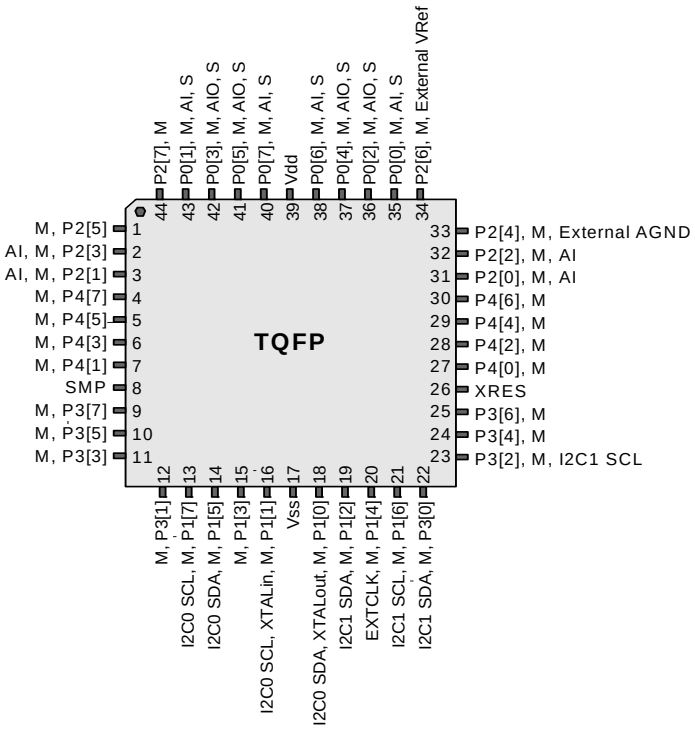

Pin No.	Digital	Analog	Name	Description
34	I/O	M	P2[6]	External Voltage Reference (VRef) input.
35	I/O	I, M, S	P0[0]	Analog column mux and SAR ADC input[b]
36	I/O	I/O, M S	P0[2]	Analog column mux and SAR ADC input. Analog column output[b, c]
37	I/O	I/O, M, S	P0[4]	Analog column mux and SAR ADC input. Analog column output[b, c]
38	I/O	I, M, S	P0[6]	Analog column mux and SAR ADC input[b]
39	Power		Vdd	Supply voltage.
40	I/O	I, M, S	P0[7]	Analog column mux and SAR ADC input[b]
41	I/O	I/O, M, S	P0[5]	Analog column mux and SAR ADC input. Analog column output[b, d]
42	I/O	I/O, M, S	P0[3]	Analog column mux and SAR ADC input. Analog column output[b, d]
43	I/O	I, M, S	P0[1]	Analog column mux and SAR ADC input[b]
44	I/O		P2[7]	

LEGEND A = Analog, I = Input, O = Output, S = SAR ADC Input, and M = Analog Mux Bus Input.
* These are the ISSP pins, which are not High Z at POR (Power On Reset).

a. CY8C28x52, CY8C28x13, and CY8C28x33 devices only have one I^2C block. Therefore, this GPIO does not function as an I^2C pin for these devices.
b. CY8C28x52 and CY8C28x23 devices do not have a SAR ADC. Therefore, this pin does not function as a SAR ADC input for these devices.
c. CY8C28x33, CY8C28x23, CY8C28x13, and CY8C28x03 devices do not have an analog output buffer for this pin. Therefore, this pin does not function as an analog column output for these devices.
d. CY8C28x13 and CY8C28x03 devices do not have any analog output buffers. Therefore, this pin does not function as an analog column output for these devices.
e. This pin is not a direct switched capacitor block analog input for CY8C28x03, CY8C28x13, CY8C28x23, and CY8C28x33 devices.

1.1.4 48-Pin Part Pinouts

Table 1-4. 48-Pin Part Pinout (QFN**)

Pin No.	Type		Pin Name	Description
	Digital	Analog		
1	I/O	I, M	P2[3]	Direct switched capacitor block input[a]
2	I/O	I, M	P2[1]	Direct switched capacitor block input[a]
3	I/O	M	P4[7]	
4	I/O	M	P4[5]	
5	I/O	M	P4[3]	
6	I/O	M	P4[1]	
7	Output		SMP	Switch Mode Pump (SMP) connection to external components.
8	I/O	M	P3[7]	
9	I/O	M	P3[5]	
10	I/O	M	P3[3]	
11	I/O	M	P3[1]	
12	I/O	M	P5[3]	
13	I/O	M	P5[1]	
14	I/O	M	P1[7]	I2C0 Serial Clock (SCL)
15	I/O	M	P1[5]	I2C0 Serial Data (SDA)
16	I/O	M	P1[3]	
17	I/O	M	P1[1]*	Crystal (XTALin), I2C0 Serial Clock (SCL), ISSP-SCLK
18	Power		Vss	Ground connection.
19	I/O	M	P1[0]*	Crystal (XTALout), I2C0 Serial Data (SDA)
20	I/O	M	P1[2]	I2C1 Serial Data (SDA)[b]
21	I/O	M	P1[4]	Optional External Clock Input (EXTCLK)
22	I/O	M	P1[6]	I2C1 Serial Clock (SCL)[b]
23	I/O	M	P5[0]	
24	I/O	M	P5[2]	
25	I/O	M	P3[0]	I2C1 Serial Data (SDA)[b]
26	I/O	M	P3[2]	I2C1 Serial Clock (SCL)[b]
27	I/O	M	P3[4]	
28	I/O	M	P3[6]	
29	Input		XRES	Active high pin reset with internal pull down.
30	I/O	M	P4[0]	
31	I/O	M	P4[2]	
32	I/O	M	P4[4]	
33	I/O	M	P4[6]	
34	I/O	I, M	P2[0]	Direct switched capacitor block input[f]
35	I/O	I, M	P2[2]	Direct switched capacitor block input[f]

CY8C28623, CY8C28643, and CY8C28645 PSoC Devices

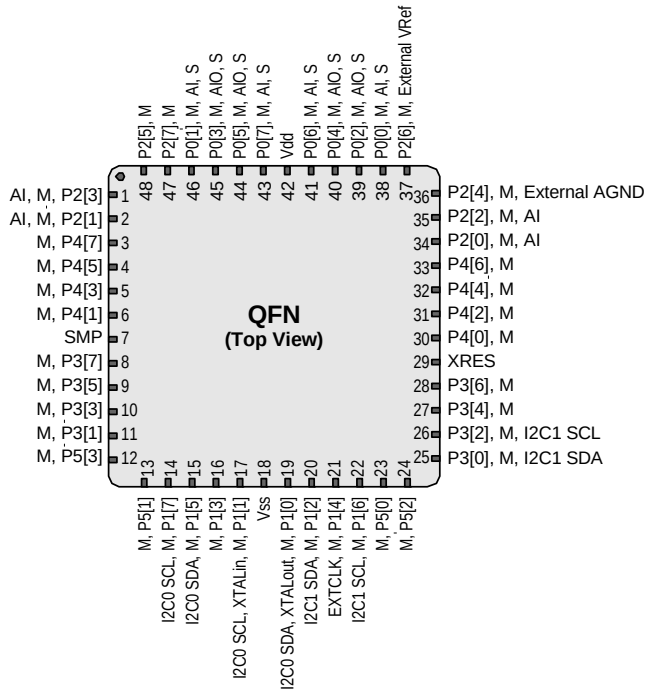

Pin No.	Digital	Analog	Pin Name	Description
36	I/O	M	P2[4]	External Analog Ground (AGND) input.
37	I/O	M	P2[6]	External Voltage Reference (VRef) input.
38	I/O	I, M, S	P0[0]	Analog column mux and SAR ADC input[c]
39	I/O	I/O, M, S	P0[2]	Analog column mux and SAR ADC input. Analog column output[c, d]
40	I/O	I/O, M, S	P0[4]	Analog column mux and SAR ADC input. Analog column output[c, d]
41	I/O	I, M, S	P0[6]	Analog column mux and SAR ADC input[c]
42	Power		Vdd	Supply voltage.
43	I/O	I, M, S	P0[7]	Analog column mux and SAR ADC input[b]
44	I/O	I/O, M, S	P0[5]	Analog column mux and SAR ADC input. Analog column output[c, e]
45	I/O	I/O, M, S	P0[3]	Analog column mux and SAR ADC input. Analog column output[c, e]
46	I/O	I, M, S	P0[1]	Analog column mux input; ADC input channel.
47	I/O	M	P2[7]	
48	I/O	M	P2[5]	

LEGEND A = Analog, I = Input, O = Output, S = SAR ADC Input, and M = Analog Mux Bus Input.
* These are the ISSP pins, which are not High Z at POR (Power On Reset).
** The QFN package has a center pad that must be connected to ground (Vss).

a. This pin is not a direct switched capacitor block analog input for CY8C28x03 and CY8C28x13 devices.
b. CY8C28x52, CY8C28x13, and CY8C28x33 devices only have one I^2C block. Therefore, this GPIO does not function as an I^2C pin for these devices.
c. CY8C28x52 and CY8C28x23 devices do not have a SAR ADC. Therefore, this pin does not function as a SAR ADC input for these devices.
d. CY8C28x33, CY8C28x23, CY8C28x13, and CY8C28x03 devices do not have an analog output buffer for this pin. Therefore, this pin does not function as an analog column output for these devices.
e. CY8C28x13 and CY8C28x03 devices do not have any analog output buffers. Therefore, this pin does not function as an analog column output for these devices.
f. This pin is not a direct switched capacitor block analog input for CY8C28x03, CY8C28x13, CY8C28x23, and CY8C28x33 devices.

1.1.5 56-Pin Part Pinout

The 56-pin SSOP package is for the CY8C28000 On-Chip Debug (OCD) PSoC device.
Note OCD parts are only used for in-circuit debugging. OCD parts are NOT available for production.

Table 1-5. 56-Pin Part Pinout (SSOP)

Pin No.	Type		Pin Name	Description
	Digital	Analog		
1			NC	No connection.
2	I/O	I, M, S	P0[7]	Analog column mux and SAR ADC input.
3	I/O	I/O, M, S	P0[5]	Analog column mux and SAR ADC input. Analog column output.
4	I/O	I/O, M, S	P0[3]	Analog column mux and SAR ADC input. Analog column output.
5	I/O	I, M, S	P0[1]	Analog column mux and SAR ADC input.
6	I/O	M	P2[7]	
7	I/O	M	P2[5]	
8	I/O	I	P2[3]	Direct switched capacitor block input.
9	I/O	I	P2[1]	Direct switched capacitor block input.
10	I/O	M	P4[7]	
11	I/O	M	P4[5]	
12	I/O	I, M	P4[3]	
13	I/O	I, M	P4[1]	
14	OCD	M	OCDE	OCD even data I/O.
15	OCD	M	OCDO	OCD odd data output.
16	Output		SMP	Switch Mode Pump (SMP) connection to required external components.
17	I/O	M	P3[7]	
18	I/O	M	P3[5]	
19	I/O	M	P3[3]	
20	I/O	M	P3[1]	
21	I/O	M	P5[3]	
22	I/O	M	P5[1]	
23	I/O	M	P1[7]	I2C0 Serial Clock (SCL).
24	I/O	M	P1[5]	I2C0 Serial Data (SDA).
25			NC	No connection.
26	I/O	M	P1[3]	
27	I/O	M	P1[1]*	Crystal Input (XTALin), I2C0 Serial Clock (SCL), ISSP-SCLK
28	Power		Vss	Ground connection.
29			NC	No connection.
30			NC	No connection.
31	I/O	M	P1[0]*	Crystal Output (XTALout), I2C0 Serial Data (SDA), ISSP-SDATA
32	I/O	M	P1[2]	I2C1 Serial Data (SDA).
33	I/O	M	P1[4]	Optional External Clock Input (EXT-CLK).
34	I/O	M	P1[6]	I2C1 Serial Clock (SCL).
35	I/O	M	P5[0]	
36	I/O	M	P5[2]	
37	I/O	M	P3[0]	I2C1 Serial Data (SDA).
38	I/O	M	P3[2]	I2C1 Serial Clock (SCL).
39	I/O	M	P3[4]	
40	I/O	M	P3[6]	

CY8C28000 PSoC Devices

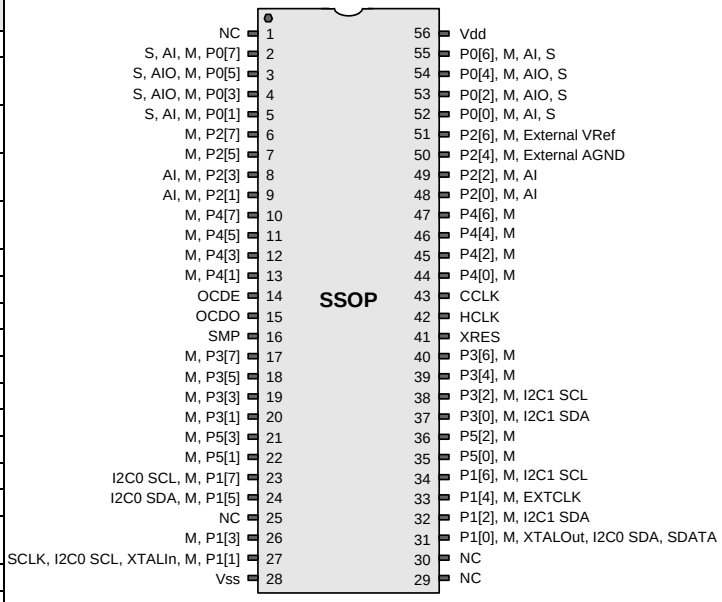

Pin No.	Type		Name	Description
	Digital	Analog		
41	Input		XRES	Active high external reset with internal pull down.
42	OCD	M	HCLK	OCD high-speed clock output.
43	OCD	M	CCLK	OCD CPU clock output.
44	I/O	M	P4[0]	
45	I/O	M	P4[2]	
46	I/O	M	P4[4]	
47	I/O	M	P4[6]	
48	I/O	I, M	P2[0]	Direct switched capacitor block input.
49	I/O	I, M	P2[2]	Direct switched capacitor block input.
50	I/O	M	P2[4]	External Analog Ground (AGND).
51	I/O	M	P2[6]	External Voltage Reference (VRef).
52	I/O	I, M, S	P0[0]	Analog column mux and SAR ADC input.
53	I/O	I/O, M, S	P0[2]	Analog column mux and SAR ADC input. Analog column output.
54	I/O	I/O, M, S	P0[4]	Analog column mux and SAR ADC input. Analog column output.
55	I/O	I, M, S	P0[6]	Analog column mux and SAR ADC input.
56	Power		Vdd	Supply voltage.

LEGEND A = Analog, I = Input, O = Output, S = SAR ADC Input, and M = Analog Mux Input.
* These are the ISSP pins, which are not High Z at POR (Power On Reset).

Section B: PSoC® Core

The PSoC® Core section discusses the core components of a PSoC device with a base part number of CY8C28xxx. This section encompasses the following chapters:

- CPU Core (M8C) on page 39
- Supervisory ROM (SROM) on page 49
- RAM Paging on page 57
- Interrupt Controller on page 65
- General Purpose I/O (GPIO) on page 73
- Internal Main Oscillator (IMO) on page 81
- Internal Low Speed Oscillator (ILO) on page 85
- External Crystal Oscillator (ECO) on page 87
- Phase-Locked Loop (PLL) on page 93
- Sleep and Watchdog on page 97

Top Level Core Architecture

The following figure displays the top-level architecture of the PSoC device's core. Each component of the figure is discussed at length in this section.

PSoC Core Block Diagram

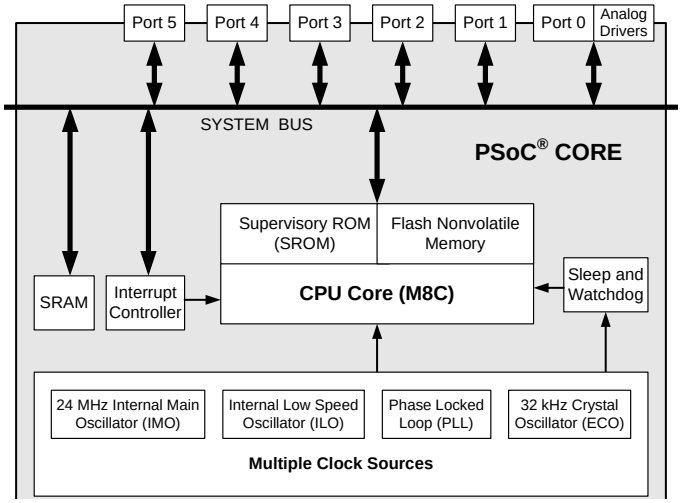

Interpreting the Core Documentation

The core section covers the heart of the PSoC device which includes the M8C ***microcontroller***; SROM, interrupt controller, GPIO, analog output drivers, and ***SRAM*** paging; multiple clock sources such as IMO, ILO, ECO, and PLL; and sleep and watchdog functionality.

The ***analog output*** drivers are described in this section and not the Analog System section because they are part of the PSoC core input and ***output*** signals.

Core Register Summary

The following table lists all the PSoC registers for the CPU core in ***address*** order within their system resource configuration. The bits that are grayed out are reserved bits. If these bits are written, they should always be written with a value of '0'. For the core registers, the first 'x' in some ***register*** addresses represents either bank 0 or bank 1. These registers are listed throughout this manual in bank 0, even though they are also available in bank 1.

Note that all CY8C28xxx devices have a combination of 4, 2, or 0 analog columns and 3 or 2 digital rows. The registers that are specifically constrained by the number of analog columns have the number of analog columns (Cols.) listed within the Address column of the table. The registers specifically pertaining to digital rows have the number of rows (Rows) listed within the Address column of the table. To determine the number of analog columns and digital rows in your device, refer to the table titled "CY8C28xxx Device Characteristics" on page 24.

Summary Table of the Core Registers

Address	Name	Bit 7	Bit 6	Bit 5	Bit 4	Bit 3	Bit 2	Bit 1	Bit 0	Access
M8C REGISTER (page 48)										
x,F7h	CPU_F	PgMode[1:0]			XIO		Carry	Zero	GIE	RL : 02
SUPERVISORY ROM (SROM) REGISTERS (page 54)										
0,D1h	STK_PP						Page Bits[2:0]			RW : 00
0,D4h	MVR_PP						Page Bits[2:0]			RW : 00
0,D5h	MVW_PP						Page Bits[2:0]			RW : 00
x,FEh	CPU_SCR1	IRESS			SLIMO	ECO EXW	ECO EX		IRAMDIS	# : 00
1,FAh	FLS_PR1								Bank	RW : 00
RAM PAGING (SRAM) REGISTERS (page 60)										
x,6Ch	TMP_DRx	Data[7:0]								RW : 00
x,6Dh	TMP_DR1	Data[7:0]								RW : 00
x,6Eh	TMP_DR2	Data[7:0]								RW : 00
x,6Fh	TMP_DR3	Data[7:0]								RW : 00
0,D0h	CUR_PP						Page Bits[2:0]			RW : 00
0,D1h	STK_PP						Page Bits[2:0]			RW : 00
0,D3h	IDX_PP						Page Bits[2:0]			RW : 00
0,D4h	MVR_PP						Page Bits[2:0]			RW : 00
0,D5h	MVW_PP						Page Bits[2:0]			RW : 00
x,F7h	CPU_F	PgMode[1:0]			XIO		Carry	Zero	GIE	RL : 02
INTERRUPT CONTROLLER REGISTERS (page 68)										
0,DAh 4 Cols.	INT_CLR0	VC3	Sleep	GPIO	Analog 3	Analog 2	Analog 1	Analog 0	V Monitor	RW : 00
2 Cols.		VC3	Sleep	GPIO			Analog 1	Analog 0	V Monitor	
0,DBh	INT_CLR1	DCC13	DCC12	DBC11	DBC10	DCC03	DCC02	DBC01	DBC00	RW : 00
0,DCh	INT_CLR2					DCC23	DCC22	DBC21	DBC20	RW : 00
0,DDh	INT_CLR3			AEC1	AEC0	RTC	SARADC	I2C1	I2C0	RW : 00
0,DEh	INT_MSK3	ENSWINT		AEC1	AEC0	RTC	SARADC	I2C1	I2C0	RW : 00
0,DF	INT_MSK2					DCC23	DCC22	DBC21	DBC20	RW : 00
0,E0h 4 Cols.	INT_MSK0	VC3	Sleep	GPIO	Analog 3	Analog 2	Analog 1	Analog 0	V Monitor	RW : 00
2 Cols.		VC3	Sleep	GPIO			Analog 1	Analog 0	V Monitor	
0,E1h	INT_MSK1	DCC13	DCC12	DBC11	DBC10	DCC03	DCC02	DBC01	DBC00	RW : 00
0,E2h	INT_VC	Pending Interrupt[7:0]								RC : 00
x,F7h	CPU_F	PgMode[1:0]			XIO		Carry	Zero	GIE	RL : 02
GENERAL PURPOSE I/O (GPIO) REGISTERS (page 76)										
0,00h	PRT0DR	Data[7:0]								RW : 00
0,01h	PRT0IE	Interrupt Enables[7:0]								RW : 00
0,02h	PRT0GS	Global Select[7:0]								RW : 00
0,03h	PRT0DM2	Drive Mode 2[7:0]								RW : FFh
1,00h	PRT0DM0	Drive Mode 0[7:0]								RW : 00

Summary Table of the Core Registers *(continued)*

Address	Name	Bit 7	Bit 6	Bit 5	Bit 4	Bit 3	Bit 2	Bit 1	Bit 0	Access
1,01h	PRT0DM1	Drive Mode 1[7:0]								RW : FFh
1,02h	PRT0IC0	Interrupt Control 0[7:0]								RW : 00
1,03h	PRT0IC1	Interrupt Control 1[7:0]								RW : 00
0,04h	PRT1DR	Data[7:0]								RW : 00
0,05h	PRT1IE	Interrupt Enables[7:0]								RW : 00
0,06h	PRT1GS	Global Select[7:0]								RW : 00
0,07h	PRT1DM2	Drive Mode 2[7:0]								RW : FFh
1,04h	PRT1DM0	Drive Mode 0[7:0]								RW : 00
1,05h	PRT1DM1	Drive Mode 1[7:0]								RW : FFh
1,06h	PRT1IC0	Interrupt Control 0[7:0]								RW : 00
1,07h	PRT1IC1	Interrupt Control 1[7:0]								RW : 00
0,08h	PRT2DR	Data[7:0]								RW : 00
0,09h	PRT2IE	Interrupt Enables[7:0]								RW : 00
0,0Ah	PRT2GS	Global Select[7:0]								RW : 00
0,0Bh	PRT2DM2	Drive Mode 2[7:0]								RW : FFh
1,08h	PRT2DM0	Drive Mode 0[7:0]								RW : 00
1,09h	PRT2DM1	Drive Mode 1[7:0]								RW : FFh
1,0Ah	PRT2IC0	Interrupt Control 0[7:0]								RW : 00
1,0Bh	PRT2IC1	Interrupt Control 1[7:0]								RW : 00
0,0Ch	PRT3DR	Data[7:0]								RW : 00
0,0Dh	PRT3IE	Interrupt Enables[7:0]								RW : 00
0,0Eh	PRT3GS	Global Select[7:0]								RW : 00
0,0Fh	PRT3DM2	Drive Mode 2[7:0]								RW : FFh
1,0Ch	PRT3DM0	Drive Mode 0[7:0]								RW : 00
1,0Dh	PRT3DM1	Drive Mode 1[7:0]								RW : FFh
1,0Eh	PRT3IC0	Interrupt Control 0[7:0]								RW : 00
1,0Fh	PRT3IC1	Interrupt Control 1[7:0]								RW : 00
0,10h	PRT4DR	Data[7:0]								RW : 00
0,11h	PRT4IE	Interrupt Enables[7:0]								RW : 00
0,12h	PRT4GS	Global Select[7:0]								RW : 00
0,13h	PRT4DM2	Drive Mode 2[7:0]								RW : FFh
1,10h	PRT4DM0	Drive Mode 0[7:0]								RW : 00
1,11h	PRT4DM1	Drive Mode 1[7:0]								RW : FFh
1,12h	PRT4IC0	Interrupt Control 0[7:0]								RW : 00
1,13h	PRT4IC1	Interrupt Control 1[7:0]								RW : 00
INTERNAL MAIN OSCILLATOR (IMO) REGISTERS (page 82)										
x,FEh	CPU_SCR1	IRESS			SLIMO	ECO EXW	ECO EX		IRAMDIS	# : 00
1,E2h	OSC_CR2	PLLGAIN			SLP_EXTEND	WDR32_SE	EXTCLKEN	RSVD	SYSCLKX2DIS	RW : 00
1,E8h	IMO_TR	Trim[7:0]								W : 00
INTERNAL LOW SPEED OSCILLATOR (ILO) REGISTER (page 85)										
1,E9h	ILO_TR			Bias Trim[1:0]		Freq Trim[3:0]				W : 00
EXTERNAL CRYSTAL OSCILLATOR (ECO) REGISTERS (page 89)										
x,FEh	CPU_SCR1	IRESS			SLIMO	ECO EXW	ECO EX		IRAMDIS	# : 00
1,E0h	OSC_CR0	32k Select	PLL Mode	No Buzz	Sleep[1:0]		CPU Speed[2:0]			RW : 00
1,EBh	ECO_TR	PSSDC[1:0]								W : 00
PHASE-LOCKED LOOP (PLL) REGISTERS (page 93)										
1,E0h	OSC_CR0	32k Select	PLL Mode	No Buzz	Sleep[1:0]		CPU Speed[2:0]			RW : 00
1,E2h	OSC_CR2	PLLGAIN			SLP_EXTEND	WDR32_SE	EXTCLKEN	RSVD	SYSCLKX2DIS	RW : 00

Summary Table of the Core Registers *(continued)*

Address	Name	Bit 7	Bit 6	Bit 5	Bit 4	Bit 3	Bit 2	Bit 1	Bit 0	Access
SLEEP AND WATCHDOG REGISTERS (page 99)										
0,E0h 4 Cols.	INT_MSK0	VC3	Sleep	GPIO	Analog 3	Analog 2	Analog 1	Analog 0	V Monitor	RW : 00
2 Cols.		VC3	Sleep	GPIO			Analog 1	Analog 0	V Monitor	
0,E3h	RES_WDT	WDSL_Clear[7:0]								W : 00
x,FEh	CPU_SCR1	IRESS			SLIMO	ECO EXW	ECO EX		IRAMDIS	# : 00
x,FFh	CPU_SCR0	GIES		WDRS	PORS	Sleep			STOP	# : XX
1,E0h	OSC_CR0	32k Select	PLL Mode	No Buzz	Sleep[1:0]		CPU Speed[2:0]			RW : 00
1,E2h	OSC_CR2	PLLGAIN			SLP_EXTEND	WDR32_SE	EXTCLKEN	RSVD	SYSCLKX2 DIS	RW : 00
1,E9h	ILO_TR			Bias Trim[1:0]		Freq Trim[3:0]				W : 00
1,EBh	ECO_TR	PSSDC[1:0]								W : 00

LEGEND
L The and f, expr; or f, expr; and xor f, expr instructions can be used to modify this register.
Access is bit specific. Refer to the Register Details chapter on page 125 for additional information.
X The value for power on reset is unknown.
x An “x” before the comma in the address field indicates that this register can be accessed or written to no matter what bank is used.
C Clearable register or bit(s).
R Read register or bit(s).
W Write register or bit(s).

2. CPU Core (M8C)

This chapter explains the CPU Core, called M8C, and its associated register. It covers the internal M8C registers, address spaces, ***instruction*** formats, and addressing modes. For additional information concerning the M8C instruction set, refer to the *PSoC ® Designer™ Assembly Language User Guide* available at the Cypress web site (http://www.cypress.com/psoc). For a complete table of the CPU Core registers, refer to the "Summary Table of the Core Registers" on page 36. For a quick reference of all PSoC® registers in address order, refer to the Register Details chapter on page 125.

2.1 Overview

The ***M8C*** is a four MIPS 8-bit Harvard architecture microprocessor. Selectable processor clock speeds from 93.7 kHz to 24 MHz allow the M8C to be tuned to a particular application's performance and power requirements. The M8C supports a rich instruction set which allows for efficient low level language support.

2.2 Internal Registers

The M8C has five internal registers that are used in program execution. The following is a list of these registers.

- Accumulator (A)
- Index (X)
- Program Counter (PC)
- Stack Pointer (SP)
- Flags (F)

All of the internal M8C registers are eight bits in width, except for the PC which is 16 bits wide. Upon ***reset***, A, X, PC, and SP are reset to 00h. The Flag register (F) is reset to 02h, indicating that the Z ***flag*** is ***set***.

With each ***stack*** operation, the SP is automatically incremented or decremented so that it always points to the next stack ***byte*** in RAM. If the last byte in the stack is at address FFh, the ***stack pointer*** will wrap to RAM address 00h. It is the ***firmware*** developer's responsibility to ensure that the stack does not overlap with user-defined variables in RAM.

With the exception of the F register, the M8C internal registers are not accessible via an explicit register address. The internal M8C registers are accessed using the following instructions:

- `MOV A, expr`
- `MOV X, expr`
- `SWAP A, SP`
- `OR F, expr`
- `JMP LABEL`

The F register can be read by using address F7h in either register bank

2.3 Address Spaces

The M8C has three address spaces: ***ROM***, ***RAM***, and registers. The ROM address space includes the supervisory ROM (SROM) and the Flash. The ROM address space is accessed via its own address and ***data bus***.

The ROM address space is composed of the Supervisory ROM and the on-chip Flash program store. Flash is organized into 64-byte blocks. The user need not be concerned with program store page boundaries, as the M8C automatically increments the 16-bit PC on every instruction making the block boundaries invisible to user code. Instructions occurring on a 256-byte Flash page boundary (with the exception of jmp instructions) incur an extra M8C clock cycle, as the upper byte of the PC is incremented.

The register address space is used to configure the PSoC microcontroller's programmable blocks. It consists of two banks of 256 bytes each. To switch between banks, the XIO bit in the Flag register is set or cleared (set for Bank1, cleared for Bank0). The common convention is to leave the bank set to Bank0 (XIO cleared), switch to Bank1 as needed (set XIO), then switch back to Bank0.

2.4 Instruction Set Summary

The instruction set is summarized in both Table 2-1 and Table 2-2 (in numeric and ***mnemonic*** order, respectively), and serves as a quick reference. If more information is needed, the Instruction Set Summary tables are described in detail in the *PSoC Designer Assembly Language User Guide* (refer to the http://www.cypress.com/psoc web site).

Table 2-1. Instruction Set Summary Sorted Numerically by Opcode

Opcode Hex	Cycles	Bytes	Instruction Format	Flags	Opcode Hex	Cycles	Bytes	Instruction Format	Flags	Opcode Hex	Cycles	Bytes	Instruction Format	Flags
00	15	1	SSC		2D	8	2	OR [X+expr], A	Z	5A	5	2	MOV [expr], X	
01	4	2	ADD A, expr	C, Z	2E	9	3	OR [expr], expr	Z	5B	4	1	MOV A, X	Z
02	6	2	ADD A, [expr]	C, Z	2F	10	3	OR [X+expr], expr	Z	5C	4	1	MOV X, A	
03	7	2	ADD A, [X+expr]	C, Z	30	9	1	HALT		5D	6	2	MOV A, reg[expr]	Z
04	7	2	ADD [expr], A	C, Z	31	4	2	XOR A, expr	Z	5E	7	2	MOV A, reg[X+expr]	Z
05	8	2	ADD [X+expr], A	C, Z	32	6	2	XOR A, [expr]	Z	5F	10	3	MOV [expr], [expr]	
06	9	3	ADD [expr], expr	C, Z	33	7	2	XOR A, [X+expr]	Z	60	5	2	MOV reg[expr], A	
07	10	3	ADD [X+expr], expr	C, Z	34	7	2	XOR [expr], A	Z	61	6	2	MOV reg[X+expr], A	
08	4	1	PUSH A		35	8	2	XOR [X+expr], A	Z	62	8	3	MOV reg[expr], expr	
09	4	2	ADC A, expr	C, Z	36	9	3	XOR [expr], expr	Z	63	9	3	MOV reg[X+expr], expr	
0A	6	2	ADC A, [expr]	C, Z	37	10	3	XOR [X+expr], expr	Z	64	4	1	ASL A	C, Z
0B	7	2	ADC A, [X+expr]	C, Z	38	5	2	ADD SP, expr		65	7	2	ASL [expr]	C, Z
0C	7	2	ADC [expr], A	C, Z	39	5	2	CMP A, expr	if (A=B) Z=1 if (A<B) C=1	66	8	2	ASL [X+expr]	C, Z
0D	8	2	ADC [X+expr], A	C, Z	3A	7	2	CMP A, [expr]		67	4	1	ASR A	C, Z
0E	9	3	ADC [expr], expr	C, Z	3B	8	2	CMP A, [X+expr]		68	7	2	ASR [expr]	C, Z
0F	10	3	ADC [X+expr], expr	C, Z	3C	8	3	CMP [expr], expr		69	8	2	ASR [X+expr]	C, Z
10	4	1	PUSH X		3D	9	3	CMP [X+expr], expr		6A	4	1	RLC A	C, Z
11	4	2	SUB A, expr	C, Z	3E	10	2	MVI A, [[expr]++]	Z	6B	7	2	RLC [expr]	C, Z
12	6	2	SUB A, [expr]	C, Z	3F	10	2	MVI [[expr]++], A		6C	8	2	RLC [X+expr]	C, Z
13	7	2	SUB A, [X+expr]	C, Z	40	4	1	NOP		6D	4	1	RRC A	C, Z
14	7	2	SUB [expr], A	C, Z	41	9	3	AND reg[expr], expr	Z	6E	7	2	RRC [expr]	C, Z
15	8	2	SUB [X+expr], A	C, Z	42	10	3	AND reg[X+expr], expr	Z	6F	8	2	RRC [X+expr]	C, Z
16	9	3	SUB [expr], expr	C, Z	43	9	3	OR reg[expr], expr	Z	70	4	2	AND F, expr	C, Z
17	10	3	SUB [X+expr], expr	C, Z	44	10	3	OR reg[X+expr], expr	Z	71	4	2	OR F, expr	C, Z
18	5	1	POP A	Z	45	9	3	XOR reg[expr], expr	Z	72	4	2	XOR F, expr	C, Z
19	4	2	SBB A, expr	C, Z	46	10	3	XOR reg[X+expr], expr	Z	73	4	1	CPL A	Z
1A	6	2	SBB A, [expr]	C, Z	47	8	3	TST [expr], expr	Z	74	4	1	INC A	C, Z
1B	7	2	SBB A, [X+expr]	C, Z	48	9	3	TST [X+expr], expr	Z	75	4	1	INC X	C, Z
1C	7	2	SBB [expr], A	C, Z	49	9	3	TST reg[expr], expr	Z	76	7	2	INC [expr]	C, Z
1D	8	2	SBB [X+expr], A	C, Z	4A	10	3	TST reg[X+expr], expr	Z	77	8	2	INC [X+expr]	C, Z
1E	9	3	SBB [expr], expr	C, Z	4B	5	1	SWAP A, X	Z	78	4	1	DEC A	C, Z
1F	10	3	SBB [X+expr], expr	C, Z	4C	7	2	SWAP A, [expr]	Z	79	4	1	DEC X	C, Z
20	5	1	POP X		4D	7	2	SWAP X, [expr]		7A	7	2	DEC [expr]	C, Z
21	4	2	AND A, expr	Z	4E	5	1	SWAP A, SP	Z	7B	8	2	DEC [X+expr]	C, Z
22	6	2	AND A, [expr]	Z	4F	4	1	MOV X, SP		7C	13	3	LCALL	
23	7	2	AND A, [X+expr]	Z	50	4	2	MOV A, expr	Z	7D	7	3	LJMP	
24	7	2	AND [expr], A	Z	51	5	2	MOV A, [expr]	Z	7E	10	1	RETI	C, Z
25	8	2	AND [X+expr], A	Z	52	6	2	MOV A, [X+expr]	Z	7F	8	1	RET	
26	9	3	AND [expr], expr	Z	53	5	2	MOV [expr], A		8x	5	2	JMP	
27	10	3	AND [X+expr], expr	Z	54	6	2	MOV [X+expr], A		9x	11	2	CALL	
28	11	1	ROMX	Z	55	8	3	MOV [expr], expr		Ax	5	2	JZ	
29	4	2	OR A, expr	Z	56	9	3	MOV [X+expr], expr		Bx	5	2	JNZ	
2A	6	2	OR A, [expr]	Z	57	4	2	MOV X, expr		Cx	5	2	JC	
2B	7	2	OR A, [X+expr]	Z	58	6	2	MOV X, [expr]		Dx	5	2	JNC	
2C	7	2	OR [expr], A	Z	59	7	2	MOV X, [X+expr]		Ex	7	2	JACC	
										Fx	13	2	INDEX	Z

Note 1 Interrupt acknowledge to Interrupt Vector table = 13 cycles.

Note 2 The number of cycles required by an instruction is increased by one for instructions that span 256 byte page boundaries in the Flash memory space.

Table 2-2. Instruction Set Summary Sorted Alphabetically by Mnemonic

Opcode Hex	Cycles	Bytes	Instruction Format	Flags	Opcode Hex	Cycles	Bytes	Instruction Format	Flags	Opcode Hex	Cycles	Bytes	Instruction Format	Flags
09	4	2	ADC A, expr	C, Z	76	7	2	INC [expr]	C, Z	20	5	1	POP X	
0A	6	2	ADC A, [expr]	C, Z	77	8	2	INC [X+expr]	C, Z	18	5	1	POP A	Z
0B	7	2	ADC A, [X+expr]	C, Z	Fx	13	2	INDEX	Z	10	4	1	PUSH X	
0C	7	2	ADC [expr], A	C, Z	Ex	7	2	JACC		08	4	1	PUSH A	
0D	8	2	ADC [X+expr], A	C, Z	Cx	5	2	JC		7E	10	1	RETI	C, Z
0E	9	3	ADC [expr], expr	C, Z	8x	5	2	JMP		7F	8	1	RET	
0F	10	3	ADC [X+expr], expr	C, Z	Dx	5	2	JNC		6A	4	1	RLC A	C, Z
01	4	2	ADD A, expr	C, Z	Bx	5	2	JNZ		6B	7	2	RLC [expr]	C, Z
02	6	2	ADD A, [expr]	C, Z	Ax	5	2	JZ		6C	8	2	RLC [X+expr]	C, Z
03	7	2	ADD A, [X+expr]	C, Z	7C	13	3	LCALL		28	11	1	ROMX	Z
04	7	2	ADD [expr], A	C, Z	7D	7	3	LJMP		6D	4	1	RRC A	C, Z
05	8	2	ADD [X+expr], A	C, Z	4F	4	1	MOV X, SP		6E	7	2	RRC [expr]	C, Z
06	9	3	ADD [expr], expr	C, Z	50	4	2	MOV A, expr	Z	6F	8	2	RRC [X+expr]	C, Z
07	10	3	ADD [X+expr], expr	C, Z	51	5	2	MOV A, [expr]	Z	19	4	2	SBB A, expr	C, Z
38	5	2	ADD SP, expr		52	6	2	MOV A, [X+expr]	Z	1A	6	2	SBB A, [expr]	C, Z
21	4	2	AND A, expr	Z	53	5	2	MOV [expr], A		1B	7	2	SBB A, [X+expr]	C, Z
22	6	2	AND A, [expr]	Z	54	6	2	MOV [X+expr], A		1C	7	2	SBB [expr], A	C, Z
23	7	2	AND A, [X+expr]	Z	55	8	3	MOV [expr], expr		1D	8	2	SBB [X+expr], A	C, Z
24	7	2	AND [expr], A	Z	56	9	3	MOV [X+expr], expr		1E	9	3	SBB [expr], expr	C, Z
25	8	2	AND [X+expr], A	Z	57	4	2	MOV X, expr		1F	10	3	SBB [X+expr], expr	C, Z
26	9	3	AND [expr], expr	Z	58	6	2	MOV X, [expr]		00	15	1	SSC	
27	10	3	AND [X+expr], expr	Z	59	7	2	MOV X, [X+expr]		11	4	2	SUB A, expr	C, Z
70	4	2	AND F, expr	C, Z	5A	5	2	MOV [expr], X		12	6	2	SUB A, [expr]	C, Z
41	9	3	AND reg[expr], expr	Z	5B	4	1	MOV A, X	Z	13	7	2	SUB A, [X+expr]	C, Z
42	10	3	AND reg[X+expr], expr	Z	5C	4	1	MOV X, A		14	7	2	SUB [expr], A	C, Z
64	4	1	ASL A	C, Z	5D	6	2	MOV A, reg[expr]	Z	15	8	2	SUB [X+expr], A	C, Z
65	7	2	ASL [expr]	C, Z	5E	7	2	MOV A, reg[X+expr]	Z	16	9	3	SUB [expr], expr	C, Z
66	8	2	ASL [X+expr]	C, Z	5F	10	3	MOV [expr], [expr]		17	10	3	SUB [X+expr], expr	C, Z
67	4	1	ASR A	C, Z	60	5	2	MOV reg[expr], A		4B	5	1	SWAP A, X	Z
68	7	2	ASR [expr]	C, Z	61	6	2	MOV reg[X+expr], A		4C	7	2	SWAP A, [expr]	Z
69	8	2	ASR [X+expr]	C, Z	62	8	3	MOV reg[expr], expr		4D	7	2	SWAP X, [expr]	
9x	11	2	CALL		63	9	3	MOV reg[X+expr], expr		4E	5	1	SWAP A, SP	Z
39	5	2	CMP A, expr	if (A=B) Z=1 if (A<B) C=1	3E	10	2	MVI A, [[expr]++]	Z	47	8	3	TST [expr], expr	Z
3A	7	2	CMP A, [expr]		3F	10	2	MVI [[expr]++], A		48	9	3	TST [X+expr], expr	Z
3B	8	2	CMP A, [X+expr]		40	4	1	NOP		49	9	3	TST reg[expr], expr	Z
3C	8	3	CMP [expr], expr		29	4	2	OR A, expr	Z	4A	10	3	TST reg[X+expr], expr	Z
3D	9	3	CMP [X+expr], expr		2A	6	2	OR A, [expr]	Z	72	4	2	XOR F, expr	C, Z
73	4	1	CPL A	Z	2B	7	2	OR A, [X+expr]	Z	31	4	2	XOR A, expr	Z
78	4	1	DEC A	C, Z	2C	7	2	OR [expr], A	Z	32	6	2	XOR A, [expr]	Z
79	4	1	DEC X	C, Z	2D	8	2	OR [X+expr], A	Z	33	7	2	XOR A, [X+expr]	Z
7A	7	2	DEC [expr]	C, Z	2E	9	3	OR [expr], expr	Z	34	7	2	XOR [expr], A	Z
7B	8	2	DEC [X+expr]	C, Z	2F	10	3	OR [X+expr], expr	Z	35	8	2	XOR [X+expr], A	Z
30	9	1	HALT		43	9	3	OR reg[expr], expr	Z	36	9	3	XOR [expr], expr	Z
74	4	1	INC A	C, Z	44	10	3	OR reg[X+expr], expr	Z	37	10	3	XOR [X+expr], expr	Z
75	4	1	INC X	C, Z	71	4	2	OR F, expr	C, Z	45	9	3	XOR reg[expr], expr	Z
										46	10	3	XOR reg[X+expr], expr	Z

Note 1 Interrupt acknowledge to Interrupt Vector table = 13 cycles.

Note 2 The number of cycles required by an instruction is increased by one for instructions that span 256 byte page boundaries in the Flash memory space.

2.5 Instruction Formats

The M8C has a total of seven instruction formats which use instruction lengths of one, two, and three bytes. All instruction bytes are fetched from the program memory (Flash), using an address and data bus that are independent from the address and data buses used for register and RAM access.

While examples of instructions are given in this section, refer to the *PSoC Designer Assembly Language User Guide* for detailed information on individual instructions.

2.5.1 One-Byte Instructions

Many instructions, such as some of the MOV instructions, have single-byte forms, because they do not use an address or data as an operand. As shown in Table 2-3, one-byte instructions use an 8-bit opcode. The set of one-byte instructions can be divided into four categories, according to where their results are stored.

Table 2-3. One-Byte Instruction Format

Byte 0
8-Bit Opcode

The first category of one-byte instructions are those that do not update any registers or RAM. Only the one-byte NOP and SSC instructions fit this category. While the ***program counter*** is incremented as these instructions execute, they do not cause any other internal M8C registers to be updated, nor do these instructions directly affect the register space or the RAM address space. The SSC instruction will cause SROM code to run, which will modify RAM and the M8C internal registers.

The second category has only the two PUSH instructions in it. The PUSH instructions are unique, because they are the only one-byte instructions that cause a RAM address to be modified. These instructions automatically increment the SP.

The third category has only the HALT instruction in it. The HALT instruction is unique, because it is the only a one-byte instruction that causes a user register to be modified. The HALT instruction modifies user register space address FFh (CPU_SCR register).

The final category for one-byte instructions are those that cause updates of the internal M8C registers. This category holds the largest number of instructions: ASL, ASR, CPL, DEC, INC, MOV, POP, RET, RETI, RLC, ROMX, RRC, SWAP. These instructions can cause the A, X, and SP registers or SRAM to update.

2.5.2 Two-Byte Instructions

The majority of M8C instructions are two bytes in length. While these instructions can be divided into categories identical to the one-byte instructions, this does not provide a useful distinction between the three two-byte instruction formats that the M8C uses.

Table 2-4. Two-Byte Instruction Formats

Byte 0	Byte 1
4-Bit Opcode	12-Bit Relative Address
8-Bit Opcode	8-Bit Data
8-Bit Opcode	8-Bit Address

The first two-byte instruction format, shown in the first row of Table 2-4, is used by short jumps and calls: `CALL`, `JMP`, `JACC`, `INDEX`, `JC`, `JNC`, `JNZ`, `JZ`. This instruction format uses only four bits for the instruction opcode, leaving 12 bits to store the relative destination address in a two's-complement form. These instructions can change program execution to an address relative to the current address by -2048 or +2047.

The second two-byte instruction format, shown in the second row of Table 2-4, is used by instructions that employ the Source Immediate addressing ***mode*** (see "Source Immediate" on page 43). The destination for these instructions is an internal M8C register, while the source is a constant value. An example of this type of instruction is `ADD A, 7`.

The third two-byte instruction format, shown in the third row of Table 2-4, is used by a wide range of instructions and addressing modes. The following is a list of the addressing modes that use this third two-byte instruction format:

- Source Direct (`ADD A, [7]`)
- Source Indexed (`ADD A, [X+7]`)
- Destination Direct (`ADD [7], A`)
- Destination Indexed (`ADD [X+7], A`)
- Source Indirect Post Increment (`MVI A, [7]`)
- Destination Indirect Post Increment (`MVI [7], A`)

For more information on addressing modes see "Addressing Modes" on page 43.

2.5.3 Three-Byte Instructions

The three-byte instruction formats are the second most prevalent instruction formats. These instructions need three bytes because they either move data between two addresses in the user-accessible address space (registers and RAM) or they hold 16-bit absolute addresses as the destination of a long jump or long call.

Table 2-5. Three-Byte Instruction Formats

Byte 0	Byte 1	Byte 2
8-Bit Opcode	16-Bit Address (MSB, LSB)	
8-Bit Opcode	8-Bit Address	8-Bit Data
8-Bit Opcode	8-Bit Address	8-Bit Address

The first instruction format, shown in the first row of Table 2-5, is used by the LJMP and LCALL instructions. These instructions change program execution unconditionally to an absolute address. The instructions use an 8-bit opcode, leaving room for a 16-bit destination address.

The second three-byte instruction format, shown in the second row of Table 2-5, is used by the following two addressing modes:

- Destination Direct Source Immediate (`ADD [7], 5`)
- Destination Indexed Source Immediate (`ADD [X+7], 5`)

The third three-byte instruction format, shown in the third row of Table 2-5, is for the Destination Direct Source Direct addressing mode, which is used by only one instruction. This instruction format uses an 8-bit opcode followed by two 8-bit addresses. The first address is the destination address in RAM, while the second address is the source address in RAM. The following is an example of this instruction:

```
MOV [7], [5]
```

2.6 Addressing Modes

The M8C has ten addressing modes. These modes are detailed and located on the following pages:

- “Source Immediate” on page 43.
- “Source Direct” on page 44.
- “Source Indexed” on page 44.
- “Destination Direct” on page 45.
- “Destination Indexed” on page 45.
- “Destination Direct Source Immediate” on page 45.
- “Destination Indexed Source Immediate” on page 46.
- “Destination Direct Source Direct” on page 46.
- “Source Indirect Post Increment” on page 47.
- “Destination Indirect Post Increment” on page 47.

2.6.1 Source Immediate

For these instructions, the source value is stored in operand 1 of the instruction. The result of these instructions is placed in either the M8C A, F, or X register as indicated by the instruction’s opcode. All instructions using the Source Immediate addressing mode are two bytes in length.

Table 2-6. Source Immediate

Opcode	Operand 1
Instruction	Immediate Value

Source Immediate Examples:

Source Code	Machine Code	Comments
`ADD A, 7`	`01 07`	The immediate value 7 is added to the Accumulator. The result is placed in the Accumulator.
`MOV X, 8`	`57 08`	The immediate value 8 is moved into the X register.
`AND F, 9`	`70 09`	The immediate value of 9 is logically ANDed with the F register and the result is placed in the F register.

2.6.2 Source Direct

For these instructions, the source address is stored in operand 1 of the instruction. During instruction execution, the address will be used to retrieve the source value from RAM or register address space. The result of these instructions is placed in either the M8C A or X register as indicated by the instruction's opcode. All instructions using the Source Direct addressing mode are two bytes in length.

Table 2-7. Source Direct

Opcode	Operand 1
Instruction	Source Address

Source Direct Examples:

Source Code	Machine Code	Comments
`ADD A, [7]`	`02 07`	The value in memory at address 7 is added to the Accumulator and the result is placed into the Accumulator.
`MOV A, REG[8]`	`5D 08`	The value in the register space at address 8 is moved into the Accumulator.

2.6.3 Source Indexed

For these instructions, the source offset from the X register is stored in operand 1 of the instruction. During instruction execution, the current X register value is added to the signed offset, to determine the address of the source value in RAM or register address space. The result of these instructions is placed in either the M8C A or X register as indicated by the instruction's opcode. All instructions using the Source Indexed addressing mode are two bytes in length.

Table 2-8. Source Indexed

Opcode	Operand 1
Instruction	Source Index

Source Indexed Examples:

Source Code	Machine Code	Comments
`ADD A, [X+7]`	`03 07`	The value in memory at address X+7 is added to the Accumulator. The result is placed in the Accumulator.
`MOV X, [X+8]`	`59 08`	The value in RAM at address X+8 is moved into the X register.

2.6.4 Destination Direct

For these instructions, the destination address is stored in the machine code of the instruction. The source for the operation is either the M8C A or X register as indicated by the instruction's opcode. All instructions using the Destination Direct addressing mode are two bytes in length.

Table 2-9. Destination Direct

Opcode	Operand 1
Instruction	Destination Address

Destination Direct Examples:

Source Code	Machine Code	Comments
`ADD [7], A`	`04 07`	The value in the Accumulator is added to memory at address 7. The result is placed in memory at address 7. The Accumulator is unchanged.
`MOV REG[8], A`	`60 08`	The Accumulator value is moved to register space at address 8. The Accumulator is unchanged.

2.6.5 Destination Indexed

For these instructions, the destination offset from the X register is stored in the machine code for the instruction. The source for the operation is either the M8C A register or an immediate value as indicated by the instruction's opcode. All instructions using the Destination Indexed addressing mode are two bytes in length.

Table 2-10. Destination Indexed

Opcode	Operand 1
Instruction	Destination Index

Destination Indexed Example:

Source Code	Machine Code	Comments
`ADD [X+7], A`	`05 07`	The value in memory at address X+7 is added to the Accumulator. The result is placed in memory at address X+7. The Accumulator is unchanged.

2.6.6 Destination Direct Source Immediate

For these instructions, the destination address is stored in operand 1 of the instruction. The source value is stored in operand 2 of the instruction. All instructions using the Destination Direct Source Immediate addressing mode are three bytes in length.

Table 2-11. Destination Direct Source Immediate

Opcode	Operand 1	Operand 2
Instruction	Destination Address	Immediate Value

Destination Direct Source Immediate Examples:

Source Code	Machine Code	Comments
`ADD [7], 5`	`06 07 05`	The value in memory at address 7 is added to the immediate value 5. The result is placed in memory at address 7.
`MOV REG[8], 6`	`62 08 06`	The immediate value 6 is moved into register space at address 8.

2.6.7 Destination Indexed Source Immediate

For these instructions, the destination offset from the X register is stored in operand 1 of the instruction. The source value is stored in operand 2 of the instruction. All instructions using the Destination Indexed Source Immediate addressing mode are three bytes in length.

Table 2-12. Destination Indexed Source Immediate

Opcode	Operand 1	Operand 2
Instruction	Destination Index	Immediate Value

Destination Indexed Source Immediate Examples:

Source Code	Machine Code	Comments
`ADD [X+7], 5`	`07 07 05`	The value in memory at address X+7 is added to the immediate value 5. The result is placed in memory at address X+7.
`MOV REG[X+8], 6`	`63 08 06`	The immediate value 6 is moved into the register space at address X+8.

2.6.8 Destination Direct Source Direct

Only one instruction uses this addressing mode. The destination address is stored in operand 1 of the instruction. The source address is stored in operand 2 of the instruction. The instruction using the Destination Direct Source Direct addressing mode is three bytes in length.

Table 2-13. Destination Direct Source Direct

Opcode	Operand 1	Operand 2
Instruction	Destination Address	Source Address

Destination Direct Source Direct Example:

Source Code	Machine Code	Comments
`MOV [7], [8]`	`5F 07 08`	The value in memory at address 8 is moved to memory at address 7.

2.6.9 Source Indirect Post Increment

Only one instruction uses this addressing mode. The source address stored in operand 1 is actually the address of a pointer. During instruction execution, the pointer's current value is read to determine the address in RAM where the source value is found. The pointer's value is incremented after the source value is read. For PSoC microcontrollers with more than 256 bytes of RAM, the Data Page Read (MVR_PP) register is used to determine which RAM page to use with the source address. Therefore, values from pages other than the current page can be retrieved without changing the Current Page Pointer (CUR_PP). The pointer is always read from the current RAM page. For information on the MVR_PP and CUR_PP registers, see the Register Details chapter on page 125. The instruction using the Source Indirect Post Increment addressing mode is two bytes in length.

Table 2-14. Source Indirect Post Increment

Opcode	Operand 1
Instruction	Source Address Pointer

Source Indirect Post Increment Example:

Source Code	Machine Code	Comments
`MVI A, [8]`	`3E 08`	The value in memory at address 8 (the indirect address) points to a memory location in RAM. The value at the memory location, pointed to by the indirect address, is moved into the Accumulator. The indirect address, at address 8 in memory, is then incremented.

2.6.10 Destination Indirect Post Increment

Only one instruction uses this addressing mode. The destination address stored in operand 1 is actually the address of a pointer. During instruction execution, the pointer's current value is read to determine the destination address in RAM where the Accumulator's value is stored. The pointer's value is incremented, after the value is written to the destination address. For PSoC microcontrollers with more than 256 bytes of RAM, the Data Page Write (MVW_PP) register is used to determine which RAM page to use with the destination address. Therefore, values can be stored in pages other than the current page without changing the Current Page Pointer (CUR_PP). The pointer is always read from the current RAM page. For information on the MVR_PP and CUR_PP registers, see the Register Details chapter on page 125. The instruction using the Destination Indirect Post Increment addressing mode is two bytes in length.

Table 2-15. Destination Indirect Post Increment

Opcode	Operand 1
Instruction	Destination Address Pointer

Destination Indirect Post Increment Example:

Source Code	Machine Code	Comments
`MVI [8], A`	`3F 08`	The value in memory at address 8 (the indirect address) points to a memory location in RAM. The Accumulator value is moved into the memory location pointed to by the indirect address. The indirect address, at address 8 in memory, is then incremented.

2.7 Register Definitions

The following register is associated with the CPU Core (M8C). The register description has an associated register table showing the bit structure. The bits that are grayed out in the table are reserved bits and are not detailed in the register description that follows. Reserved bits should always be written with a value of ‘0’.

2.7.1 CPU_F Register

Address	Name	Bit 7	Bit 6	Bit 5	Bit 4	Bit 3	Bit 2	Bit 1	Bit 0	Access
x,F7h	CPU_F	PgMode[1:0]			XIO		Carry	Zero	GIE	RL : 02h

LEGEND
L The AND F, expr; OR F, expr; and XOR F, expr flag instructions can be used to modify this register.
x An “x” before the comma in the address field indicates that this register can be read or written to no matter what bank is used.

The M8C Flag Register (CPU_F) provides read access to the M8C flags.

Bits 7 and 6: PgMode[1:0]. PgMode determines how the CUR_PP, STK_PP, and IDX_PP registers are used in forming effective RAM addresses for Direct Address mode and Indexed Address mode operands. PgMode also determines whether the stack page is determined by the STK_PP or IDX_PP register.

Bit 4: XIO. The I/O Bank Select bit, also known as the register bank select bit, is used to select the register bank that is active for a register read or write. This bit allows the PSoC device to have 512 8-bit registers and therefore, can be thought of as the ninth address bit for registers. The address space accessed when the XIO bit is set to ‘0’ is called the ***user space***, while the address space accessed when the XIO bit is set to ‘1’ is called the ***configuration space***.

Bit 2: Carry. The Carry flag bit is set or cleared in response to the result of several instructions. It can also be manipulated by the flag-logic opcodes (for example, OR F, 4). See the *PSoC Designer Assembly Guide User Manual* for more details.

Bit 1: Zero. The Zero flag bit is set or cleared in response to the result of several instructions. It can also be manipulated by the flag-logic opcodes (for example, OR F, 2). See the *PSoC Designer Assembly Guide User Manual* for more details.

Bit 0: GIE. The state of the Global Interrupt Enable bit determines whether interrupts (by way of the interrupt request (IRQ)) will be recognized by the M8C. This bit is set or cleared by the user, using the flag-logic instructions (for example, OR F, 1). GIE is also cleared automatically when an interrupt is processed, after the flag byte has been stored on the stack, preventing nested interrupts. If desired, the bit can be set in an ***interrupt service routine (ISR)***.

For GIE = 1, the M8C samples the IRQ input for each instruction. For GIE = 0, the M8C ignores the IRQ.

For additional information, refer to the CPU_F register on page 214.

3. Supervisory ROM (SROM)

This chapter discusses the Supervisory ROM (SROM) functions. For a quick reference of all PSoC® registers in address order, refer to "Register Reference" on page 109.

3.1 Architectural Description

The SROM holds code that boots the PSoC device, calibrate circuitry, and perform Flash operations. The functions provided by the SROM are called from code stored in the Flash or by device programmers.

The SROM boots the part and provide ***interface*** functions to the Flash banks. (Table 3-1 lists the SROM functions.) The SROM functions are accessed by using the Supervisory System Call instruction (SSC), which has an opcode of 00h. Before executing the SSC, the M8C's ***accumulator*** needs to load with the desired SROM function code from Table 3-1.

Attempting to access undefined functions causes a HALT. The SROM functions execute code with calls; therefore, the functions require stack space. With the exception of Reset, all of the SROM functions have a ***parameter block*** in SRAM that you must configure before executing the SSC.

Table 3-2 lists all possible parameter block variables. The meaning of each ***parameter***, with regards to a specific SROM function, is described later in this chapter. Because the SSC instruction clears the CPU_F PgMode bits, all parameter block variable addresses are in SRAM Page 0. The CPU_F value is automatically restored at the end of the SROM function.

The MVR_PP and the MVW_PP pointers are not disabled by clearing the CPU_F PgMode bits. Therefore, the POINTER parameter is interpreted as an address in the page indicated by the MVI page pointers, when the supervisory operation is called. This allows the data ***buffer*** used in the supervisory operation to be located in any SRAM page. (See the RAM Paging chapter on page 57 for more details regarding the MVR_PP and MVW_PP pointers.)

Table 3-1. List of SROM Functions

Function Code	Function Name	Stack Space Needed	Page
00h	SWBootReset	0	50
01h	ReadBlock	7	51
02h	WriteBlock	10	52
03h	EraseBlock	9	52
06h	TableRead	3	52
07h	CheckSum	3	53
08h	Calibrate0	4	53
09h	Calibrate1	3	54
0Ah	WriteAndVerify	7	54
0Fh	HWBootReset	3	51

Note ProtectBlock (described on page 52) and EraseAll (described on page 53) SROM functions are not listed in the table because they depend upon external programming.

Table 3-2. SROM Function Variables

Variable Name	SRAM Address
KEY1 / RETURN CODE	0,F8h
KEY2	0,F9h
BLOCKID	0,FAh
POINTER	0,FBh
CLOCK	0,FCh
Reserved	0,FDh
DELAY	0,FEh
Reserved	0,FFh

Two important variables that are used for all functions are KEY1 and KEY2. These variables are used to help discriminate between valid SSCs and inadvertent SSCs. KEY1 must always have a value of 3Ah, while KEY2 must have the same value as the stack pointer when the SROM function begins execution. This is the SP (Stack Pointer) value when the SSC opcode is executed, plus three. For all SROM functions except SWBootReset, if either of the keys do not match the expected values, the M8C will halt. The SWBootReset function does not check the key values. It only checks to see if the accumulator's value is 0x00.

The following code example puts the correct value in KEY1 and KEY2. The code is preceded by a HALT, to force the program to jump directly into the setup code and not accidentally run into it.

```
1.        halt
2. SSCOP: mov [KEY1], 3ah
3.        mov X, SP
4.        mov A, X
5.        add A, 3
6.        mov [KEY2], A
```

3.1.1 Additional SROM Feature

The SROM has these feature.

Return Codes: Return codes aid in the determination of success or failure of a particular function. The return code is stored in KEY1's position in the parameter block. The CheckSum and TableRead functions do not have return codes because KEY1's position in the parameter block is used to return other data.

Table 3-3. SROM Return Code Meanings

Return Code Value	Description
00h	Success
01h	Function not allowed due to level of protection on the block.
02h	Software reset without hardware reset.
03h	Fatal error, SROM halted.

Note Read, write, and erase operations may fail if the target block is read or write protected. Block protection levels are set during device programming and cannot be modified from code in the PSoC device.

3.1.2 SROM Function Descriptions

3.1.2.1 SWBootReset Function

The SROM function SWBootReset is responsible for transitioning the device from a reset state to running ***user*** code. See "System Resets" on page 513 for more information on what events causes the SWBootReset function to execute.

The SWBootReset function is executed whenever the SROM is entered with an M8C accumulator value of 00h; the SRAM parameter block is not used as an input to the function. This happens, by design, after a ***hardware*** reset because the M8C's accumulator is reset to 00h or when user code executes the SSC instruction with an accumulator value of 00h.

If the ***checksum*** of the calibration data is valid, the SWBootReset function ends by setting the internal M8C registers to 00h, writing 00h to most SRAM addresses in SRAM Page 0, and then begins to execute user code at address 0000h. (See Table 3-4 and the following paragraphs for more information on which SRAM addresses are modified.) If the checksum is not valid, an internal reset is executed and the boot process starts over. If this condition occurs, the internal reset status bit (IRESS) is set in the CPU_SCR1 register.

In PSoC devices with more than 256 bytes of SRAM, no SRAM is modified by the SWBootReset function in SRAM pages numbered higher than '0'.

Table 3-4 documents the value of all the SRAM addresses in Page 0 after a successful SWBootReset. A value of "xx" indicates that the SRAM address is not modified by the SWBootReset function. A hex value indicates that the address should always have the indicated value after a successful SWBootReset. A "??" indicates that the value, after a SWBootReset, is determined by the value of the IRAMDIS bit in the CPU_SCR1 register. If IRAMDIS is not set, these addresses will be initialized to 00h. If IRAMDIS is set, these addresses will not be modified by a SWBootReset after a watchdog reset.

The IRAMDIS bit allows the preservation of variables even if a watchdog reset (WDR) occurs. The IRAMDIS bit is reset by all system resets except watchdog reset. Therefore, this bit is only useful for watchdog resets and not general resets.

Table 3-4. SRAM Map Post SWBootReset (00h)

Address	0	1	2	3	4	5	6	7
	8	9	A	B	C	D	E	F
0x0_	0x00	0x00	0x00	??	??	??	??	??
	??	??	??	??	??	??	??	??
0x1_	??	??	??	??	??	??	??	??
	??	??	??	??	??	??	??	??
0x2_	??	??	??	??	??	??	??	??
	??	??	??	??	??	??	??	??
0x3_	??	??	??	??	??	??	??	??
	??	??	??	??	??	??	??	??
0x4_	??	??	??	??	??	??	??	??
	??	??	??	??	??	??	??	??
0x5_	??	??	??	??	??	??	??	??
	??	??	??	??	??	??	??	??
0x6_	??	??	??	??	??	??	??	??
	??	??	??	??	??	??	??	??
0x7_	??	??	??	??	??	??	??	??
	??	??	??	??	??	??	??	??
0x8_	??	??	??	??	??	??	??	??
	??	??	??	??	??	??	??	??
0x9_	??	??	??	??	??	??	??	??
	??	??	??	??	??	??	??	??
0xA_	??	??	??	??	??	??	??	??
	??	??	??	??	??	??	??	??
0xB_	??	??	??	??	??	??	??	??
	??	??	??	??	??	??	??	??
0xC_	??	??	??	??	??	??	??	??
	??	??	??	??	??	??	??	??
0xD_	??	??	??	??	??	??	??	??
	0x00	0x00	0x00	0x00	0x00	0x00	0x00	0x00
0xE_	0x00	0x00	0x00	0x00	0x00	0x00	0x00	0x00
	0x00	0x00	0x00	0x00	0x00	0x00	0x00	0x00
0xF_	0x00	0x00	0x00	0x00	0x00	0x00	??	??
	0x00 0x02	xx	0x00	0x00	0xn	xx	0x00	0x00

Address F8h is the return code byte for all SROM functions (except Checksum and TableRead); for this function, the only acceptable values are 00h and 02h. Address FCh is the fail count variable. After POR (Power on Reset), WDR, or XRES (External Reset), the variable is initialized to 00h by the SROM. Each time the checksum fails, the fail count is incremented. Therefore, if it takes two passes through SWBootReset to get a good checksum, the fail count is 01h.

3.1.2.2 HWBootReset Function

The HWBootReset function forces a hardware reset of the PSoC. A hardware rest causes all registers to return to their POR state. Then, the SROM SWBootReset function executes, followed by Flash code execution beginning at address 0x0000.

The HWBootReset function only requires that the CPU_A, KEY1, and KEY2 be setup correctly. As with all other SROM functions, if the setup is incorrect, the SROM executes a HALT. Then, either a POR, XRES, or WDR is needed to clear the HALT. See the System Resets chapter on page 123 for more information.

Table 3-5. HWBootReset Parameters (0Fh)

Name	Address	Type	Description
KEY1	0,F8h	RAM	3Ah
KEY2	0,F9h	RAM	Stack Pointer value+3, when SSC is executed.

3.1.2.3 ReadBlock Function

The ReadBlock function reads 64 contiguous bytes from Flash: a ***block***. The CY8C28xxx PSoC devices have 16 KB of Flash and therefore have 256 64-byte blocks. Valid block IDs are 0x00 to 0xFF.

Table 3-6. Flash Memory Organization

PSoC Device	Amount of Flash	Amount of SRAM	Number of Blocks per Bank	Number of Banks
CY8C28xxx	16 KB	1 KB	128	2

The first thing the ReadBlock function does is to check the protection bits to determine if the desired BLOCKID is readable. If read protection is turned on, the ReadBlock function exits setting the accumulator and KEY2 back to 00h. KEY1 has a value of 01h indicating a read failure.

If read protection is not enabled, the function reads 64 bytes from the Flash using a ROMX instruction and stores the results in SRAM using an MVI instruction. The 64 bytes are stored in SRAM, beginning at the address indicated by the value of the POINTER parameter. When the ReadBlock completes successfully, the accumulator, KEY1, and KEY2 will all have a value of 00h.

Note A MVI [expr], A is used to store the Flash block contents in SRAM; thus, you can the MVW_PP register to indicate which SRAM pages receive the data.

Table 3-7. ReadBlock Parameters (01h)

Name	Address	Type	Description
MVW_PP	0,D5h	Register	MVI write page pointer register
KEY1	0,F8h	RAM	3Ah
KEY2	0,F9h	RAM	Stack Pointer value+3, when SSC is executed.
BLOCKID	0,FAh	RAM	Flash block number
POINTER	0,FBh	RAM	Addresses in SRAM where returned data should be stored.

3.1.2.4 WriteBlock Function

The WriteBlock function stores data in the Flash. Data moves 64 bytes at a time from SRAM to Flash using this function. Before doing a write, you must successfully complete an EraseAll or an EraseBlock.

The first thing the WriteBlock function does is check the protection bits and determine if the desired BLOCKID is writeable. If write protection is turned on, the WriteBlock function will exit, setting the accumulator and KEY2 back to 00h. KEY1 will have a value of 01h, indicating a write failure. Write protection is set when the PSoC device is programmed externally and cannot be changed through the SSC function.

The BLOCKID of the ***Flash block***, where the data is stored, must be determined and stored at SRAM address FAh. Valid block IDs are 0x00 to 0xFF.

An MVI A, [expr] instruction is used to move data from SRAM into Flash. Therefore, the MVI read pointer (MVR_PP register) can be used to specify which SRAM page data is pulled from. Using the MVI read pointer and the parameter blocks POINTER value allows the SROM WriteBlock function to move data from any SRAM page into any Flash block.

The SRAM address, of the first of the 64 bytes to be stored in Flash, must be indicated using the POINTER variable in the parameter block (SRAM address FBh).

Finally, the CLOCK and DELAY value must be set correctly. The CLOCK value determines the length of the write ***pulse*** that will be used to store the data in the Flash. The CLOCK and DELAY values are dependent on the CPU speed and must be set correctly. Refer to "Clocking Strategy" on page 56 for additional information.

Table 3-8. WriteBlock Parameters (02h)

Name	Address	Type	Description
MVR_PP	0,D4h	Register	MVI read page pointer register.
KEY1	0,F8h	RAM	3Ah
KEY2	0,F9h	RAM	Stack Pointer value+3, when SSC is executed.
BLOCKID	0,FAh	RAM	Flash block number
POINTER	0,FBh	RAM	First of 64 addresses in SRAM, where the data to be stored in Flash is located prior to calling WriteBlock.
CLOCK	0,FCh	RAM	Clock divider used to set the write pulse width.
DELAY	0,FEh	RAM	For a CPU speed of 12 MHz set to 56h.

The CPU must be less than or equal to 12 MHz for the operation to work correctly.

3.1.2.5 EraseBlock Function

The EraseBlock function is used to erase a block of 64 contiguous bytes in Flash.

The first thing the EraseBlock function does is check the protection bits and determine if the desired BLOCKID is writeable. If write protection is turned on, the EraseBlock function exits, setting the accumulator and KEY2 back to 00h. KEY1 has a value of 01h, indicating a write failure.

To set up the parameter block for the EraseBlock function, store the correct key values in KEY1 and KEY2. The block number to erased must be stored in the BLOCKID variable, and the CLOCK and DELAY values must be set based on the current CPU speed. For more information on setting the CLOCK and DELAY values, see "Clocking Strategy" on page 56.

Table 3-9. EraseBlock Parameters (03h)

Name	Address	Type	Description
KEY1	0,F8h	RAM	3Ah
KEY2	0,F9h	RAM	Stack Pointer value+3, when SSC is executed.
BLOCKID	0,FAh	RAM	Flash block number
CLOCK	0,FCh	RAM	Clock divider used to set the erase pulse width.
DELAY	0,FEh	RAM	For a CPU speed of 12 MHz set to 56h.

The CPU must be less than or equal to 12 MHz for the operation to work correctly.

3.1.2.6 ProtectBlock Function

The PSoC devices offer Flash protection on a block-by-block basis. Table 3-10 lists the protection modes available. In the table, ER and EW are used to indicate the ability to perform external reads and writes (that is, by an external programmer). For internal writes, IW is used. Internal reading is always permitted by way of the ROMX instruction. The ability to read by way of the SROM ReadBlock function is indicated by SR.

In this table, note that all protection is removed by EraseAll.

Table 3-10. Protect Block Modes

Mode	Settings	Description	In PSoC Designer
00b	SR ER EW IW	Unprotected	U = Unprotected
01b	$\overline{\text{SR}}$ $\overline{\text{ER}}$ EW IW	Read protect	F = Factory upgrade
10b	$\overline{\text{SR}}$ $\overline{\text{ER}}$ $\overline{\text{EW}}$ IW	Disable external write	R = Field upgrade
11b	$\overline{\text{SR}}$ $\overline{\text{ER}}$ $\overline{\text{EW}}$ $\overline{\text{IW}}$	Disable internal write	W = Full protection

3.1.2.7 TableRead Function

The TableRead function gives the user access to part-specific data stored in the Flash during manufacturing. The Flash for these tables is separate from the program Flash and is not directly accessible.

One of the uses of the TableRead function is to retrieve the values needed to optimize Flash programming for temperature. More information about how to use these values is in the section titled “Clocking Strategy” on page 56.

3.1.2.8 EraseAll Function

The EraseAll function performs a series of steps that destroys the user data in the Flash banks and resets the protection block in each Flash bank to all zeros (the unprotected state). This function is only executed by an external programmer. If EraseAll is executed from code, the M8C will HALT without touching the Flash or protections. See Table 3-11.

Table 3-11. Flash Tables with Assigned Values in Flash Bank 0

	F8h	F9h	FAh	FBh	FCh	FDh	FEh	FFh
Table 0	Silicon ID							
Table 1	Voltage Reference Trim for 3.3 V reg[1,EA]	IMO Trim for 3.3 V reg[1,E8]	Room Temperature Calibration for 3.3 V	Hot Temperature Calibration for 3.3 V	Voltage Reference Trim for 5 V reg[1,EA]	IMO Trim for 5 V reg[1,E8]	Room Temperature Calibration for 5 V	Hot Temperature Calibration for 5 V
Table 2					IMO Slow Trim 6 MHz Vdd = 3.3 V		IMO Slow Trim 6 MHz Vdd = 5.0 V	
Table 3	M (cold)	B (cold)	Mult (cold)	M (hot)	B (hot)	Mult (hot)	00h	01h

3.1.2.9 Checksum Function

The Checksum function calculates a 16-bit checksum over a user specifiable number of blocks, within a single ***Flash bank*** starting at block zero. The BLOCKID parameter is used to pass in the number of blocks to checksum. A BLOCKID value of '1' calculates the checksum of only block 0, a BLOCKID of '2' calculates the checksum of block 0 and block 1, and so on. A BLOCKID value of '0' calculates the checksum of the entire flash bank. Note that if the BLOCKID is greater than the number of blocks that the device has in a flash bank, the function calculates the checksum for the entire flash bank and repeats the process of checksum again from block 0 in that flash bank. For example, if the BLOCKID is equal to 150, the function calculates the checksum for block 0 to block 127 and again for block 0 to block 21.

The 16-bit checksum is returned in KEY1 and KEY2. The parameter KEY1 holds the lower 8 bits of the checksum and the parameter KEY2 holds the upper 8 bits of the checksum.

Table 3-12. Checksum Parameters (07h)

Name	Address	Type	Description
KEY1	0,F8h	RAM	3Ah
KEY2	0,F9h	RAM	Stack Pointer value+3, when SSC is executed.
BLOCKID	0,FAh	RAM	Number of Flash blocks to calculate checksum on.

3.1.2.10 Calibrate0 Function

The Calibrate0 function transfers the calibration values stored in a special area of the Flash to their appropriate registers. This function may be executed at any time to set all calibration values back to their 5-V values. However, it is unnecessary to call this function. This function is simply documented for completeness. 3.3-V calibration values are accessed by way of the TableRead function, which is described in the section titled “TableRead Function” on page 52.

Table 3-13. Calibrate0 Parameters (08h)

Name	Address	Type	Description
KEY1	0,F8h	RAM	3Ah
KEY2	0,F9h	RAM	Stack Pointer value+3, when SSC is executed.

3.1.2.11 Calibrate1 Function

While the Calibrate1 function is a completely separate function from Calibrate0, they perform the same task, which is to transfer the calibration values stored in a special area of the Flash to their appropriate registers. What is unique about Calibrate1 is that it calculates a checksum of the calibration data and, if that checksum is determined as invalid, Calibrate1 causes a ***hardware reset*** by generating an internal reset. If this occurs, it is indicated by setting the Internal Reset Status bit (IRESS) in the CPU_SCR1 register.

The Calibrate1 function uses SRAM to calculate a checksum of the calibration data. The POINTER value is used to indicate the address of a 30-byte buffer used by this function. When the function completes, the 30 bytes are set to 00h.

An MVI A, [expr] and an MVI [expr], A instruction are used to move data between SRAM and Flash. Therefore, the MVI write pointer (MVW_PP) and the MVI read pointer (MVR_PP) must be specified to the same SRAM page to control the page of RAM used for the operations.

Calibrate1 was created as a subfunction of SWBootReset and the Calibrate1 function code was added to provide ***direct access***. For more information on how Calibrate1 works, see the “SWBootReset Function” on page 50.

This function may be executed at any time to set all calibration values back to their 5-V values. However, it is unnecessary to call this function. This function is simply documented for completeness. This function has no argument to select between 5-V and 3.3-V calibration values; therefore, it always defaults to 5-V values. 3.3-V calibration values are accessed by way of the TableRead function, which is described in the section titled “TableRead Function” on page 52.

Table 3-14. Calibrate1 Parameters (09h)

Name	Address	Type	Description
KEY1	0,F8h	RAM	3Ah
KEY2	0,F9h	RAM	Stack Pointer value+3, when SSC is executed.
POINTER	0,FBh	RAM	First of 30 SRAM addresses used by this function.
MVR_PP	0,D4h	Register	MVI write page pointer
MVW_PP	0,D5h	Register	MVI read page pointer

3.1.2.12 WriteAndVerify Function

The WriteAndVerify function works exactly the same as the WriteBlock function with one exception. When the write operation has completed, the SROM will then read back the contents of Flash and compare those values against the values in SRAM thus verifying that the write was successful. The write and verify is one SROM operation; therefore, the SROM is not exited until the verify is completed.

The parameters for this block are identical to the WriteBlock (see “WriteBlock Parameters (02h)” on page 52). If the verify operation fails, the 0x04 error code is returned at SRAM address 0xF8. If the write fails, the 0x01 error code returns at SRAM address 0xF8.

Table 3-15. WriteAndVerify Parameters (0Ah)

Name	Address	Type	Description
KEY1	0,F8h	RAM	3Ah
KEY2	0,F9h	RAM	Stack Pointer value+3, when SSC is executed.
BLOCKID	0,FAh	RAM	Flash block number.
POINTER	0,FBh	RAM	First of 64 addresses in SRAM, where the data to be stored in Flash is located prior to calling WriteBlock.
CLOCK	0,FCh	RAM	Clock divider used to set the write pulse width.
DELAY	0,FEh	RAM	For a CPU speed of 12 MHz set to 56h.

3.2 Register Definitions

3.2.1 FLS_PR1 Register

Address	Name	Bit 7	Bit 6	Bit 5	Bit 4	Bit 3	Bit 2	Bit 1	Bit 0	Access
1,FAh	FLS_PR1								Bank	RW : 00

The Flash Program Register 1 (FLS_PR1) is used to specify which Flash bank should be used for SROM operations.

Note This register has no effect on products with one Flash bank. Refer to the table titled “Flash Memory Organization”

on page 51 to determine the number of Flash banks in PSoC devices.

Bit 0: Bank. The Bank bit in this register indicates which Flash bank the SROM Flash functions should operate on. The default value for the Bank bit is zero. Flash bank 0 holds up to the first 8K of user code, as well as the cal table. The optional Flash bank 1 holds additional user code.

For additional information, refer to the FLS_PR1 register on page 308.

3.2.2 Related Registers

- "STK_PP Register" on page 61.
- "MVR_PP Register" on page 61.
- "MVW_PP Register" on page 62.
- "CPU_SCR1 Register" on page 514.

3.3 Clocking Strategy

Successful programming and erase operations, on the Flash, require you to set the CLOCK and DELAY parameters correctly. To determine the proper value for the DELAY parameter only, you must consider CPU speed. Use three factors to determine the proper value for CLOCK: operating temperature, CPU speed, and characteristics of the individual device. Equations and additional information on calculating the DELAY and CLOCK values follow.

3.3.1 DELAY Parameter

To determine the proper value for the DELAY parameter, you must consider CPU speed during a Flash operation. Equation 1 displays the equation for calculating DELAY based on a CPU speed value. In this equation the units for CPU are hertz (Hz).

$$DELAY = \frac{100 \times 10^{-6} \cdot CPU - 80}{13}, \qquad \textbf{Equation 1}$$

$$3MHz \le CPU \le 12MHz$$

Equation 2 shows the calculation of the DELAY value for a CPU speed of 12 MHz. The numerical result of this calculation should be rounded to the nearest whole number. In the case of a 12 MHz CPU speed, the correct value for DELAY is 86 (0x56).

$$DELAY = \frac{100 \times 10^{-6} \cdot 12 \times 10^{6} - 80}{13} \qquad \textbf{Equation 2}$$

3.3.2 CLOCK Parameter

The CLOCK parameter must be calculated using different equations for erase and write operations. The erase value for CLOCK must be calculated first. In Equation 3, the erase CLOCK value is indicated by a subscript E after the word CLOCK. In Equation 5, the write CLOCK value is indicated by a subscript W after the word CLOCK.

Before either CLOCK value can be calculated, the values for M, B, and Mult must be determined. These are device specific values that are stored in the Flash Table 3 and are accessed by way of the TableRead SROM function (see the “TableRead Function” on page 52). If the operating temperature is at or below 0°C, use the cold values. For operating temperatures at or above 0°C, use the hot values. See Table 3-11 for more information.

Equations for calculating the correct value of CLOCK for write operations are first introduced with the assumption that the CPU speed is 12 MHz. The equation for calculating the CLOCK value for an erase Flash operation is shown in Equation 3. In this equation the T has units of °C.

$$CLOCK_E = B - \frac{2M \cdot T}{256} \qquad \textbf{Equation 3}$$

Using the correct values for B, M, and T, in the Equation 3, is required to achieve the endurance specifications of the Flash. However, for device programmers where this calculation is difficult to perform, the equation is simplified by setting T to 0°C and using the hot value for B and M. This simplification is acceptable only if the total number of erase write cycles are kept to less than 10 and the operation is performed near room temperature. When T is set to ‘0’, Equation 3 simplifies to.

$$CLOCK_E = B \qquad \textbf{Equation 4}$$

When a value for the erase CLOCK value is determined, the write CLOCK value can be calculated. The equation to calculate the CLOCK value for a write is.

$$CLOCK_W = \frac{CLOCK_E \cdot Mult}{64} \qquad \textbf{Equation 5}$$

In this equation, the correct value for Mult must be determined, based upon temperature, in the same way that the B and M values were determined for Equation 3.

4. RAM Paging

This chapter explains the PSoC® device's use of RAM Paging and its associated registers. For a complete table of the RAM Paging registers, refer to the "Summary Table of the Core Registers" on page 36. For a quick reference of all PSoC registers in address order, refer to the Register Details chapter on page 125.

4.1 Architectural Description

The M8C is an 8-bit CPU with an 8-bit address bus. The 8-bit memory address bus allows the M8C to access up to 256 bytes of SRAM, to increase the amount of available SRAM and preserve the M8C ***assembly*** language. PSoC devices with more than 256 bytes of SRAM have a paged memory architecture. The CY8C28xxx devices have 1 KB of RAM; thus, they have four pages.

To take full advantage of the paged memory architecture of the PSoC device, several registers must be used and two CPU_F register bits must be managed. However, the Power On Reset (POR) value for all of the paging registers and CPU_F bits is zero. This places the PSoC device in a mode identical to PSoC devices with only 256 bytes of SRAM. It is not necessary to understand all of the Paging registers to take advantage of the additional SRAM available in some devices. Very simple modifications to the reset state of the memory paging logic can be made, to begin to take advantage of the additional SRAM pages.

The memory paging architecture consists of five areas:

- Stack Operations
- Interrupts
- MVI Instructions
- Current Page Pointer
- Indexed Memory Page Pointer

The first three of these areas have no dependency on the CPU_F register's PgMode bits and are covered in the next subsections after Basic Paging. The function of the last two depend on the CPU_F PgMode bits and will be covered last.

4.1.1 Basic Paging

The M8C is an 8-bit CPU with an 8-bit memory address bus. The memory address bus allows the M8C to access up to 256 bytes of SRAM. To increase the amount of SRAM, the M8C accesses memory page bits. The memory page bits are located in the CUR_PP register and allow for selection of one of eight SRAM pages. In addition to setting the page bits, Page mode must be enabled by setting the CPU_F[7] bit. If Page mode is not enabled, the page bits are ignored and all non-stack memory access is directed to Page 0.

After Page mode is enabled and the page bits are set, all instructions that operate on memory access the SRAM page indicated by the page bits. The exceptions to this are the instructions that operate on the stack and the MVI instructions: PUSH, POP, LCALL, RETI, RET, CALL, and MVI. See the description of "Stack Operations" on page 58 and see "MVI Instructions" on page 58 for a more detailed discussion.

Figure 4-1. Data Memory Organization

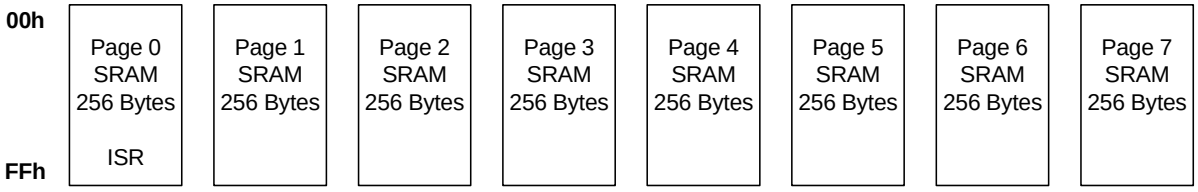

4.1.2 Stack Operations

As mentioned previously, the paging architecture's reset state puts the PSoC in a mode that is identical to that of a 256 byte PSoC device. Therefore, upon rest, all memory accesses will be to Page 0. The SRAM page that stack operations will use is determined by the value of the three least significant bits of the stack page pointer register (STK_PP). Stack operations have no dependency on the PgMode bits in the CPU_F register. Stack operations are those that use the Stack Pointer (SP) to calculate their affected address. Refer to the *PSoC Designer Assembly Language User Guide* for more information on all M8C instructions.

Stack memory accesses must be treated as a special case. If they are not, the stack can be fragmented across several pages. To prevent the stack from becoming fragmented, all instructions that operate on the stack automatically use the page indicated by the STK_PP register. Therefore, if a CALL is encountered in the program, the PSoC device will automatically push the program counter onto the stack page indicated by STK_PP. When the program counter is pushed, the SRAM paging mode automatically switches back to the pre-call mode. All other stack operations, such as RET and POP, follow the same rule as CALL. The stack is confined to a single SRAM page and the Stack Pointer will wrap from 00h to FFh and FFh to 00h. The user code must ensure that the stack is not damaged due to stack wrapping.

Because the value of the STK_PP register can be changed at any time, it is theoretically possible to manage the stack in such a way as to allow it to grow beyond one SRAM page or manage multiple stacks. However, the only supported use of the STK_PP register is when its value is set prior to the first stack operation and not changed again.

4.1.3 Interrupts

Interrupts, in a multi-page SRAM PSoC device, operate the same as interrupts in a 256 byte PSoC device. However, because the CPU_F register is automatically set to 0x00 on an interrupt and because of the non-linear nature of interrupts in a system, other parts of the PSoC memory paging architecture can be affected.

Interrupts are an abrupt change in program flow. If no special action is taken on interrupts by the PSoC device, the ***interrupt service routine (ISR)*** could be thrown into any SRAM page. To prevent this problem, the special addressing modes for all memory accesses, except for stack and MVI, are disabled when an ISR is entered. The special addressing modes are disabled when the CUP_F register is cleared. At the end of the ISR, the previous SRAM addressing mode is restored when the CPU_F register value is restored by the RETI instruction.

Therefore, all interrupt service ***routine*** code will start execution in SRAM Page 0. If it is necessary for the ISR to change to another SRAM page, it can be accomplished by changing the values of the CPU_F[7:6] bits to enable the special SRAM addressing modes. However, any change made to the CUR_PP, IDX_PP, or STK_PP registers will persist after the ISR returns. Therefore, the ISR should save the current value of any paging register it modifies and restore its value before the ISR returns.

4.1.4 MVI Instructions

MVI instructions use data page pointers of their own (MVR_PP and MVW_PP). This allows a data buffer to be located away from other program variables, but accessible without changing the Current Page Pointer (CUR_PP).

An MVI instruction performs three memory operations. Both forms of the MVI instruction access an address in SRAM that holds the data pointer (a memory read 1st access), incrementing that value and then storing it back in SRAM (a memory write 2nd access). This pointer value must reside in the current page, just as all other non-stack and non-indexed operations on memory must. However, the third memory operation uses the MVx_PP register. This third memory access can be either a read or a write, depending on which MVI instruction is used. The MVR_PP pointer is used for the MVI instruction that moves data into the accumulator. The MVW_PP pointer is used for the MVI instruction that moves data from the accumulator into SRAM. The MVI pointers are always enabled, regardless of the state of the Flag register page bits (CPU_F register).

4.1.5 Current Page Pointer

The Current Page Pointer is used to determine which SRAM page should be used for all memory accesses. Normal memory accesses are those not covered by other pointers including all non-stack, non-MVI, and non-indexed memory access instructions. The normal memory access instructions have the SRAM page they operate on determined by the value of the CUR_PP register. By default, the CUR_PP register has no affect on the SRAM page that will be used for normal memory access, because all normal memory access is forced to SRAM Page 0.

The upper bit of the PgMode bits in the CPU_F register determine whether or not the CUR_PP register affects normal memory access. When the upper bit of the PgMode bits is set to ‘0’, all normal memory access is forced to SRAM Page 0. This mode is automatically enabled when an Interrupt Service Routine (ISR) is entered. This is because, before the ISR is entered, the M8C pushes the current value of the CPU_F register onto the stack and then clears the CPU_F register. Therefore, by default, any normal memory access in an ISR is guaranteed to occur in SRAM Page 0.

When the RETI instruction is executed, to end the ISR, the previous value of the CPU_F register is restored, restoring the previous page mode. Note that this ISR behavior is the default and that the PgMode bits in the CPU_F register can be changed while in an ISR. If the PgMode bits are changed while in an ISR, the pre-ISR value is still restored by the

RETI; but if the CUR_PP register is changed in the ISR, the ISR is also required to restore the value before executing the RETI instruction.

When the upper bit of the PgMode bits is set to '1', all normal memory access is forced to the SRAM page indicated by the value of the CUR_PP register. Table 4-1 gives a summary of the PgMode bit values and the corresponding Memory Paging mode.

4.1.6 Index Memory Page Pointer

The source indexed and destination indexed addressing modes to SRAM are treated as a unique addressing mode in a PSoC device, with more than one page of SRAM. An example of an indexed addressing mode is the MOV A, [X+expr] instruction. Note that register access also has indexed addressing; however, those instructions are not affected by the SRAM paging architecture.

Important Note If you are not using assembly to program a PSoC device, be aware that the ***compiler*** writer may restrict the use of some memory paging modes. Review the conventions in your compiler's user guide for more information on restrictions or conventions associated with memory paging modes.

Indexed SRAM accesses operate in one of three modes:

- Index memory access modes are forced to SRAM Page 0.
- Index memory access modes are directed to the SRAM page indicated by the value in the STK_PP register.
- Index memory access is forced to the SRAM page indicated by the value in the IDX_PP register.

The mode is determined by the value of the PgMode bits in the CPU_F register. However, the final SRAM page that is used also requires setting either the Stack Page Pointer (STK_PP) register or the Index Page Pointer (IDX_PP) register. Table 4-1 shows the three indexed memory access modes. The third column of the table is provided for reference only.

Table 4-1. CPU_F PgMode Bit Modes

CPU_F PgMode Bits	Current SRAM Page	Indexed SRAM Page	Typical Use
00b	0	0	ISR*
01b	0	STK_PP	ISR with variables on stack
10b	CUR_PP	IDX_PP	
11b	CUR_PP	STK_PP	

* Mode used by SROM functions initiated by the SSC instruction.

After reset, the PgMode bits are set to 00b. In this mode, index memory accesses are forced to SRAM Page 0, just as they are in a PSoC device with only 256 bytes of SRAM. This mode is also automatically enabled when an interrupt occurs in a PSoC device and is therefore considered the default ISR mode. This is because before the ISR is entered, the M8C pushes the current value of the CPU_F register on to the stack and then clears the CPU_F register. Therefore, by default, any indexed memory access in an ISR is guaranteed to occur in SRAM Page 0. When the RETI instruction is executed to end the ISR, the previous value of the CPU_F register is restored and the previous page mode is then also restored. Note that this ISR behavior is the default and that the PgMode bits in the CPU_F register may be changed while in an ISR. If the PgMode bits are changed while in an ISR, the pre-ISR value is still restored by the RETI; but if the STK_PP or IDX_PP registers are changed in the ISR, the ISR is also required to restore the values before executing the RETI instruction.

The most likely PgMode bit change, while in an ISR, is from the default value of 00b to 01b. In the 01b mode, indexed memory access is directed to the SRAM page indicated by the value of the STK_PP register. By using the PgMode, the value of the STK_PP register is not required to be modified. The STK_PP register is the register that determines which SRAM page the stack is located on. The 01b paging mode is intended to provide easy access to the stack, while in an ISR, by setting the CPU_X register (just X in the instruction format) equal to the value of SP using the MOV X, SP instruction.

The two previous paragraphs covered two of the three indexed memory access modes: STK_PP and forced to SRAM Page 0. Note, as shown in Table 4-1, that the STK_PP mode for indexed memory access is available under two PgMode settings. The 01b mode is intended for ISR use and the 11b mode is intended for non-ISR use. The third indexed memory access mode requires the PgMode bits to be set to 10b. In this mode indexed memory access is forced to the SRAM page indicated by the value of the IDX_PP register.

4.2 Register Definitions

The following registers are associated with RAM Paging and are listed in address order. The register descriptions have an associated register table showing the bit structure for that register. The bits in the tables that are grayed out are reserved bits and are not detailed in the register descriptions that follow. Reserved bits should always be written with a value of '0'. For a complete table of RAM Paging registers, refer to the "Summary Table of the Core Registers" on page 36.

4.2.1 TMP_DRx Registers

Address	Name	Bit 7	Bit 6	Bit 5	Bit 4	Bit 3	Bit 2	Bit 1	Bit 0	Access
x,6xh	TMP_DRx	Data[7:0]								RW : 00

LEGEND

x An 'x' before the comma in the address field indicates that this register can be read or written to no matter what bank is used. An "x" after the comma in the address field indicates that there are multiple instances of the register.

The Temporary Data Registers (TMP_DR0, TMP_DR1, TMP_DR2, and TMP_DR3) are used to enhance the performance in multiple SRAM page PSoC devices.

These registers have no pre-defined function (for example, the compiler and hardware do not use these registers) and exist for the user to use as desired.

Bits 7 to 0: Data[7:0]. Due to the paged SRAM architecture of PSoC devices with more than 256 bytes of SRAM, a value in SRAM may not always be accessible without first changing the current page. The TMP_DRx registers are readable and writeable registers that are provided to improve the performance of multiple SRAM page PSoC devices, by supplying some register space for data that is always accessible.

For an expanded listing of the TMP_DRx registers, refer to the "Summary Table of the Core Registers" on page 36. For additional information, refer to the TMP_DRx register on page 155.

4.2.2 CUR_PP Register

Address	Name	Bit 7	Bit 6	Bit 5	Bit 4	Bit 3	Bit 2	Bit 1	Bit 0	Access
0,D0h	CUR_PP						Page Bits[2:0]			RW : 00

The Current Page Pointer Register (CUR_PP) is used to set the effective SRAM page for normal memory accesses in a multi-SRAM page PSoC device.

Bits 2 to 0: Page Bits[2:0]. These bits affect the SRAM page that is accessed by an instruction when the CPU_F[7:0] bits have a value of either 10b or 11b. Source indexed and destination indexed addressing modes, as well as stack instructions, are never affected by the value of the CUR_PP register. (See the STK_PP and IDX_PP registers for more information.)

The source indirect post increment and destination indirect post increment addressing modes, better know as MVI, are only partially affected by the value of the CUR_PP register. For MVI instructions, the pointer address is in the SRAM page indicated by CUR_PP, but the address pointed to may be in another SRAM page. See the MVR_PP and MVW_PP register descriptions for more information.

For additional information, refer to the CUR_PP register on page 189.

4.2.3 STK_PP Register

Address	Name	Bit 7	Bit 6	Bit 5	Bit 4	Bit 3	Bit 2	Bit 1	Bit 0	Access
0,D1h	STK_PP						Page Bits[2:0]			RW : 00

The Stack Page Pointer Register (STK_PP) is used to set the effective SRAM page for stack memory accesses in a multi-SRAM page PSoC device.

Bits 2 to 0: Page Bits[2:0]. These bits have the potential to affect two types of memory access.

The purpose of this register is to determine which SRAM page the stack will be stored on. In the reset state, this register's value will be 0x00 and the stack will therefore be in SRAM Page 0. However, if the STK_PP register value is changed, the next stack operation will occur on the SRAM page indicated by the new STK_PP value. Therefore, the value of this register should be set early in the program and never be changed. If the program changes the STK_PP value after the stack has grown, the program must ensure that the STK_PP value is restored when needed.

Note that the impact that the STK_PP register has on the stack is independent of the SRAM Paging bits in the CPU_F register.

The second type of memory accesses that the STK_PP register affects are indexed memory accesses when the CPU_F[7:6] bits are set to 11b. In this mode, source indexed and destination indexed memory accesses are directed to the stack SRAM page, rather than the SRAM page indicated by the IDX_PP register or SRAM Page 0.

For additional information, refer to the STK_PP register on page 190.

4.2.4 IDX_PP Register

Address	Name	Bit 7	Bit 6	Bit 5	Bit 4	Bit 3	Bit 2	Bit 1	Bit 0	Access
0,D3h	IDX_PP						Page Bits[2:0]			RW : 00

The Index Page Pointer Register (IDX_PP) is used to set the effective SRAM page for indexed memory accesses in a multi-SRAM page PSoC device.

Bits 2 to 0: Page Bits[2:0]. These bits allow instructions, which use the source indexed and destination indexed address modes, to operate on an SRAM page that is not equal to the current SRAM page. However, the effect this register has on indexed addressing modes is only enabled when the CPU_F[7:6] is set to 10b.

When CPU_F[7:6] is set to 10b and an indexed memory access is made, the access is directed to the SRAM page indicated by the value of the IDX_PP register.

See the STK_PP register description for more information on other indexed memory access modes.

For additional information, refer to the IDX_PP register on page 191.

4.2.5 MVR_PP Register

Address	Name	Bit 7	Bit 6	Bit 5	Bit 4	Bit 3	Bit 2	Bit 1	Bit 0	Access
0,D4h	MVR_PP						Page Bits[2:0]			RW : 00

The MVI Read Page Pointer Register (MVR_PP) is used to set the effective SRAM page for MVI read memory accesses in a multi-SRAM page PSoC device.

Bits 2 to 0: Page Bits[2:0]. These bits are only used by the MVI A, [expr] instruction, not to be confused with the MVI [expr], A instruction covered by the MVW_PP register. This instruction is considered a read because data is transferred from SRAM to the microprocessor's A register (CPU_A).

When an MVI A, [expr] instruction is executed in a device with more than one page of SRAM, the SRAM address that is read by the instruction is determined by the value of the least significant bits in this register. However, the pointer for the MVI A, [expr] instruction is always located in the current SRAM page. See the *PSoC Designer Assembly Language User Guide* for more information on the MVI A, [expr] instruction.

The function of this register and the MVI instructions are independent of the SRAM Paging bits in the CPU_F register. For additional information, refer to the MVR_PP register on page 192.

4.2.6 MVW_PP Register

Address	Name	Bit 7	Bit 6	Bit 5	Bit 4	Bit 3	Bit 2	Bit 1	Bit 0	Access
0,D5h	MVW_PP						Page Bits[2:0]			RW : 00

The MVI Write Page Pointer Register (MVW_PP) is used to set the effective SRAM page for MVI write memory accesses in a multi-SRAM page PSoC device.

Bits 2 to 0: Page Bits[2:0]. These bits are only used by the MVI [expr], A instruction, not to be confused with the MVI A, [expr] instruction covered by the MVR_PP register. This instruction is considered a write because data is transferred from the microprocessor's A register (CPU_A) to SRAM.

When an MVI [expr], A instruction is executed in a device with more than one page of SRAM, the SRAM address that is written by the instruction is determined by the value of the least significant bits in this register. However, the pointer for the MVI [expr], A instruction is always located in the current SRAM page. See the *PSoC Designer Assembly Language User Guide* for more information on the MVI [expr], A instruction.

The function of this register and the MVI instructions are independent of the SRAM Paging bits in the CPU_F register. For additional information, refer to the MVW_PP register on page 193.

4.2.7 CPU_F Register

Address	Name	Bit 7	Bit 6	Bit 5	Bit 4	Bit 3	Bit 2	Bit 1	Bit 0	Access
x,F7h	CPU_F	PgMode[1:0]			XIO		Carry	Zero	GIE	RL : 02

LEGEND

L The AND F, expr; OR F, expr; and XOR F, expr flag instructions can be used to modify this register.
x An 'x' before the comma in the address field indicates that this register can be read or written to no matter what bank is used.

The M8C Flag Register (CPU_F) provides read access to the M8C flags.

Bits 7 and 6: PgMode[1:0]. PgMode determines how the CUR_PP and IDX_PP registers are used in forming effective RAM addresses for Direct Address mode and Indexed Address mode operands.

Bit 4: XIO. The I/O Bank Select bit, also know as the register bank select bit, is used to select the register bank that is active for a register read or write. This bit allows the PSoC device to have 512 8-bit registers and therefore, can be thought of as the ninth address bit for registers. The address space accessed when the XIO bit is set to '0' is called the ***user space***, while the address space accessed when the XIO bit is set to '1' is called the ***configuration space***.

Bit 2: Carry. The Carry Flag bit is set or cleared in response to the result of several instructions. It can also be manipulated by the flag-logic opcodes (for example, OR F, 4). See the *PSoC Designer Assembly Guide User Manual* for more details.

Bit 1: Zero. The Zero Flag bit is set or cleared in response to the result of several instructions. It can also be manipulated by the flag-logic opcodes (for exam

4.2.8 MVR_PP Register

Address	Name	Bit 7	Bit 6	Bit 5	Bit 4	Bit 3	Bit 2	Bit 1	Bit 0	Access
0,D4h	MVR_PP						Page Bits[2:0]			RW : 00

The MVI Read Page Pointer Register (MVR_PP) is used to set the effective SRAM page for MVI read memory accesses in a multi-SRAM page PSoC device.

Bits 2 to 0: Page Bits[2:0]. These bits are only used by the MVI A, [expr] instruction, not to be confused with the MVI [expr], A instruction covered by the MVW_PP register. This instruction is considered a read because data is transferred from SRAM to the microprocessor's A register (CPU_A).

When an MVI A, [expr] instruction is executed in a device with more than one page of SRAM, the SRAM address that is read by the instruction is determined by the value of the least significant bits in this register. However, the pointer for the MVI A, [expr] instruction is always located in the current SRAM page. See the *PSoC Designer Assembly Language*

User Guide for more information on the MVI A, [expr] instruction.

The function of this register and the MVI instructions are independent of the SRAM Paging bits in the CPU_F register. For additional information, refer to the MVR_PP register on page 192.

4.2.9 MVW_PP Register

Address	Name	Bit 7	Bit 6	Bit 5	Bit 4	Bit 3	Bit 2	Bit 1	Bit 0	Access
0,D5h	MVW_PP						Page Bits[2:0]			RW : 00

The MVI Write Page Pointer Register (MVW_PP) is used to set the effective SRAM page for MVI write memory accesses in a multi-SRAM page PSoC device.

Bits 2 to 0: Page Bits[2:0]. These bits are only used by the MVI [expr], A instruction, not to be confused with the MVI A, [expr] instruction covered by the MVR_PP register. This instruction is considered a write because data is transferred from the microprocessor's A register (CPU_A) to SRAM.

When an MVI [expr], A instruction is executed in a device with more than one page of SRAM, the SRAM address that is written by the instruction is determined by the value of the least significant bits in this register. However, the pointer for the MVI [expr], A instruction is always located in the current SRAM page. See the *PSoC Designer Assembly Language User Guide* for more information on the MVI [expr], A instruction.

The function of this register and the MVI instructions are independent of the SRAM Paging bits in the CPU_F register. For additional information, refer to the MVW_PP register on page 193.

4.2.10 CPU_F Register

Address	Name	Bit 7	Bit 6	Bit 5	Bit 4	Bit 3	Bit 2	Bit 1	Bit 0	Access
x,F7h	CPU_F	PgMode[1:0]			XIO		Carry	Zero	GIE	RL : 02

LEGEND

L The AND F, expr; OR F, expr; and XOR F, expr flag instructions can be used to modify this register.

x An 'x' before the comma in the address field indicates that this register can be read or written to no matter what bank is used.

The M8C Flag Register (CPU_F) provides read access to the M8C flags.

Bits 7 and 6: PgMode[1:0]. PgMode determines how the CUR_PP and IDX_PP registers are used in forming effective RAM addresses for Direct Address mode and Indexed Address mode operands.

Bit 4: XIO. The I/O Bank Select bit, also know as the register bank select bit, is used to select the register bank that is active for a register read or write. This bit allows the PSoC device to have 512 8-bit registers and therefore, can be thought of as the ninth address bit for registers. The address space accessed when the XIO bit is set to '0' is called the ***user space***, while the address space accessed when the XIO bit is set to '1' is called the ***configuration space***.

Bit 2: Carry. The Carry Flag bit is set or cleared in response to the result of several instructions. It can also be manipulated by the flag-logic opcodes (for example, OR F, 4). See the *PSoC Designer Assembly Guide User Manual* for more details.

Bit 1: Zero. The Zero Flag bit is set or cleared in response to the result of several instructions. It can also be manipulated by the flag-logic opcodes (for example, OR F, 2). See the *PSoC Designer Assembly Guide User Manual* for more details.

Bit 0: GIE. The state of the Global Interrupt Enable bit determines whether interrupts (by way of the IRQ) will be recognized by the M8C. This bit is set or cleared by the user, using the flag-logic instructions (for example, OR F, 1). GIE is also cleared automatically by the M8C upon entering the interrupt service routine (ISR), after the flag byte has been stored on the stack, preventing nested interrupts. Note that the bit can be set in an ISR if desired.

For GIE = 1, the M8C samples the IRQ input for each instruction. For GIE = 0, the M8C ignores the IRQ. For additional information, refer to the CPU_F register on page 214.

5. Interrupt Controller

This chapter presents the Interrupt Controller and its associated registers. The interrupt controller provides a mechanism for a hardware resource in PSoC® devices, to change program execution to a new address without regard to the current task being performed by the code being executed. For a complete table of the Interrupt Controller registers, refer to the "Summary Table of the Core Registers" on page 36. For a quick reference of all PSoC registers in address order, refer to the Register Details chapter on page 125.

5.1 Architectural Description

A block diagram of the PSoC Interrupt Controller is shown in Figure 5-1, illustrating the concepts of ***posted interrupts*** and ***pending interrupts***.

Figure 5-1. Interrupt Controller Block Diagram

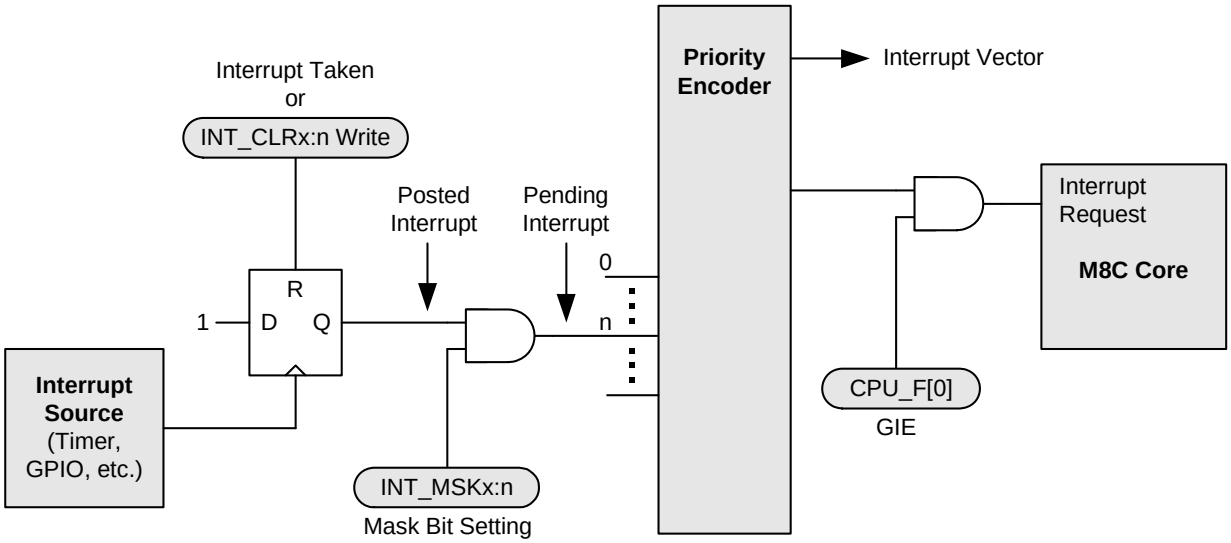

The sequence of events that occur during interrupt processing is as follows.

1. An interrupt becomes active, either because (a) the interrupt condition occurs (for example, a timer expires), (b) a previously posted interrupt is enabled through an update of an interrupt ***mask*** register, or (c) an interrupt is pending and GIE is set from '0' to '1' in the CPU Flag register.
2. The current executing instruction finishes.
3. The internal interrupt routine executes, taking 13 cycles. During this time, the following actions occur:
   a. The PCH, PCL, and Flag register (CPU_F) are pushed onto the stack (in that order).
   b. The CPU_F register is then cleared. Because this clears the GIE bit to 0, additional interrupts are temporarily disabled.
   c. The PCH (PC[15:8]) is cleared to zero.
   d. The interrupt vector is read from the interrupt controller and its value is placed into PCL (PC[7:0]). This sets the program counter to point to the appropriate address in the interrupt table (for example, 001Ch for the GPIO interrupt).

4. Program execution vectors to the interrupt table. Typically, a LJMP instruction in the interrupt table sends execution to the user's interrupt service routine (ISR) for this interrupt. (See “Instruction Set Summary” on page 40.)
5. The ISR executes. Note that interrupts are disabled because GIE = 0. In the ISR, interrupts can be re-enabled if desired, by setting GIE = 1 (take care to avoid stack overflow in this case).
6. The ISR ends with a RETI instruction. This pops the Flag register, PCL, and PCH from the stack, restoring those registers. The restored Flag register re-enables interrupts, because GIE = 1 again.
7. Execution resumes at the next instruction, after the one that occurred before the interrupt. However, if there are more pending interrupts, the subsequent interrupts will be processed before the next normal program instruction.

Interrupt Latency. The time between the assertion of an enabled interrupt and the start of its ISR can be calculated using the following equation:

$$\begin{aligned} Latency = \quad & \text{Equation 1} \\ & \textit{Time for current instruction to finish} + \\ & \textit{Time for M8C to change program counter to interrupt address} + \\ & \textit{Time for LJMP instruction in interrupt table to execute.} \end{aligned}$$

For example, if the 5-cycle JMP instruction is executing when an interrupt becomes active, the total number of CPU clock cycles before the ISR begins is as follows:

$$\begin{aligned} & \textit{(1 to 5 cycles for JMP to finish)} + \quad \text{Equation 2} \\ & \textit{(13 cycles for interrupt routine)} + \\ & \textit{(7 cycles for LJMP)} = \textit{21 to 25 cycles.} \end{aligned}$$

In the example above, at 24 MHz, 25 clock cycles take 1.042 µs.

Interrupt Priority. The priorities of the interrupts only come into consideration if more than one interrupt is pending during the same instruction cycle. In this case, the priority encoder (see Figure 5-1) generates an interrupt vector for the highest priority interrupt that is pending.

5.1.1 Posted versus Pending Interrupts

An interrupt is posted when its interrupt conditions occur. This results in the flip-flop in Figure 5-1 clocking in a ‘1’. The interrupt will remain posted until the interrupt is taken or until it is cleared by writing to the appropriate INT_CLRx register.

A posted interrupt is not pending unless it is enabled by setting its interrupt mask bit (in the appropriate INT_MSKx register). All pending interrupts are processed by the Priority Encoder to determine the highest priority interrupt which will be taken by the M8C if the Global Interrupt Enable bit is set in the CPU_F register.

Disabling an interrupt by clearing its interrupt mask bit (in the INT_MSKx register) does not clear a posted interrupt, nor does it prevent an interrupt from being posted. It simply prevents a posted interrupt from becoming pending.

It is especially important to understand the functionality of clearing posted interrupts, if the configuration of the PSoC device is changed by the application.

For example, if a digital PSoC block is configured as a counter and has posted an interrupt but is later reconfigured to a serial communications receiver, the posted interrupt from the counter will remain. Therefore, if the digital PSoC block's INT_MSKx bit is set after configuring the block as a serial communications receiver, a pending interrupt is generated immediately. To prevent the carryover of posted interrupts from one configuration to the next, the INT_CLRx registers should be used to clear posted interrupts prior to enabling the digital PSoC block.

5.2 Application Description

The interrupt controller and its associated registers allow the user's code to respond to an interrupt from almost every functional block in the PSoC devices. Interrupts for all the digital blocks and each of the analog columns are available, as well as interrupts for supply voltage, sleep, variable clocks, and a general GPIO (pin) interrupt.

The registers associated with the interrupt controller allow interrupts to be disabled either globally or individually. The registers also provide a mechanism by which a user can clear all pending and posted interrupts, or clear individual posted or pending interrupts. A software mechanism is provided to set individual interrupts. Setting an interrupt by way of software is very useful during code development, when one may not have the complete hardware system necessary to generate a real interrupt.

The following table lists the interrupts for all CY8C28xxx devices and the priorities that are available in each CY8C28xxx device.

Table 5-1. Device Interrupts and Priorities

Interrupt Priority	Interrupt Address	CY8C28x03	CY8C28x13	CY8C28x23	CY8C28x33	CY8C28x43	CY8C28x45	CY8C28x52	Interrupt Name
0 (Highest)	0000h	✓	✓	✓	✓	✓	✓	✓	Reset
1	0004h	✓	✓	✓	✓	✓	✓	✓	Supply Voltage Monitor
2	0008h			✓	✓	✓	✓	✓	Analog Column 0/Decimator0
3	000Ch			✓	✓	✓	✓	✓	Analog Column 1/Decimator1
4	0010h					✓	✓	✓	Analog Column 2/Decimator2
5	0014h					✓	✓	✓	Analog Column 3/Decimator3
6	0018h	✓	✓	✓	✓	✓	✓	✓	VC3
7	001Ch	✓	✓	✓	✓	✓	✓	✓	GPIO
8	0020h	✓	✓	✓	✓	✓	✓	✓	PSoC Block DBC00
9	0024h	✓	✓	✓	✓	✓	✓	✓	PSoC Block DBC01
10	0028h	✓	✓	✓	✓	✓	✓	✓	PSoC Block DCC02
11	002Ch	✓	✓	✓	✓	✓	✓	✓	PSoC Block DCC03
12	0030h	✓	✓	✓	✓	✓	✓	✓	PSoC Block DBC10
13	0034h	✓	✓	✓	✓	✓	✓	✓	PSoC Block DBC11
14	0038h	✓	✓	✓	✓	✓	✓	✓	PSoC Block DCC12
15	003Ch	✓	✓	✓	✓	✓	✓	✓	PSoC Block DCC13
16	0040h	✓	✓	✓	✓	✓	✓		PSoC Block DBC20
17	0044h	✓	✓	✓	✓	✓	✓		PSoC Block DBC21
18	0048h	✓	✓	✓	✓	✓	✓		PSoC Block DCC22
19	004Ch	✓	✓	✓	✓	✓	✓		PSoC Block DCC23
20	0050h								Reserved
21	0054h								Reserved
22	0058h								Reserved
23	005Ch								Reserved
24	0060h	✓	✓	✓	✓	✓	✓	✓	I2C0
25	0064h	✓		✓		✓	✓		I2C1
26	0068h	✓	✓		✓	✓	✓		SAR ADC
27	006Ch	✓	✓	✓	✓	✓	✓	✓	RTC
28	0070h		✓		✓		✓	✓	Analog Column 4
29	0074h		✓		✓		✓	✓	Analog Column 5
30	0078h								Reserved
31 (Lowest)	007Ch	✓	✓	✓	✓	✓	✓	✓	Sleep Timer

5.3 Register Definitions

The following registers are associated with the Interrupt Controller and are listed in address order. The register descriptions have an associated register table showing the bit structure for that register. The bits in the tables that are grayed out are reserved bits and are not detailed in the register descriptions that follow. Reserved bits should always be written with a value of '0'. For a complete table of Interrupt Controller registers, refer to the "Summary Table of the Core Registers" on page 36.

Depending on the CY8C28xxx device you have, only certain bits are accessible to be read or written. See Table 5-1 on page 67 for the interrupt availability by subfamily.

5.3.1 INT_CLRx Registers

Address	Name	Bit 7	Bit 6	Bit 5	Bit 4	Bit 3	Bit 2	Bit 1	Bit 0	Access
0,DAh	INT_CLR0	VC3	Sleep	GPIO	Analog 3	Analog 2	Analog 1	Analog 0	V Monitor	RW : 00
0,DBh	INT_CLR1	DCC13	DCC12	DBC11	DBC10	DCC03	DCC02	DBC01	DBC00	RW : 00
0,DCh	INT_CLR2					DCC23	DCC22	DBC21	DBC20	RW : 00
0,DDh	INT_CLR3			Analog 5	Analog 4	RTC	SARADC	I2C1	I2C0	RW : 00

The Interrupt Clear Registers (INT_CLRx) are used to enable the individual interrupt sources' ability to clear posted interrupts.

There are four interrupt clear registers (INT_CLR0, INT_CLR1, INT_CLR2, and INT_CLR3) which may be referred to in general as INT_CLRx.The INT_CLRx registers are similar to the INT_MSKx registers in that they hold a bit for each interrupt source. Functionally the INT_CLRx registers are similar to the INT_VC register, although their operation is completely independent. When an INT_CLRx register is read, any bits that are set indicates an interrupt has been posted for that hardware resource. Therefore, reading these registers gives the user the ability to determine all posted interrupts.

The Enable Software Interrupt (ENSWINT) bit in INT_MSK3[7] determines the way an individual bit value written to an INT_CLR0 register is interpreted. When ENSWINT is cleared (the default state), writing 1's to an INT_CLRx register has no effect. However, writing 0's to an INT_CLRx register, when ENSWINT is cleared, will cause the corresponding interrupt to clear. If the ENSWINT bit is set, any 0's written to the INT_CLRx registers are ignored. However, 1's written to an INT_CLRx register, while ENSWINT is set, will cause an interrupt to post for the corresponding interrupt.

Note When using the INT_CLRx register to post an interrupt, the hardware interrupt source, such as a digital clock, must not have its interrupt output high. Therefore, it may be difficult to use software interrupts with interrupt sources that do not have enables such as VC3.

Software interrupts can aid in debugging interrupt service routines by eliminating the need to create system level interactions that are sometimes necessary to create a hardware-only interrupt.

5.3.1.1 INT_CLR0 Register

Depending on the analog column configuration of your PSoC device (see the table titled "CY8C28xxx Device Characteristics" on page 24), some bits may not be available in the INT_CLR0 register.

Bit 7: VC3. This bit allows posted VC3 interrupts to be read, cleared, or set.

Bit 6: Sleep. This bit allows posted sleep interrupts to be read, cleared, or set.

Bit 5: GPIO. This bit allows posted GPIO interrupts to be read, cleared, or set.

Bit 4: Analog 3. This bit allows posted analog column 3 interrupts to be read, cleared, or set.

Bit 3: Analog 2. This bit allows posted analog column 2 interrupts to be read, cleared, or set.

Bit 2: Analog 1. This bit allows posted analog column 1 interrupts to be read, cleared, or set.

Bit 1: Analog 0. This bit allows posted analog column 0 interrupts to be read, cleared, or set.

Bit 0: V Monitor. This bit allows posted V monitor interrupts to be read, cleared, or set.

For additional information, refer to the INT_CLR0 register on page 199.

5.3.1.2 INT_CLR1 Register

Depending on the digital row configuration of your PSoC device (see the table titled “CY8C28xxx Device Characteristics” on page 24), some bits may not be available in the INT_CLR1 register.

Bit 7: DCC13. This bit allows posted DCC13 interrupts to be read, cleared, or set for row 1 block 3.

Bit 6: DCC12. This bit allows posted DCC12 interrupts to be read, cleared, or set for row 1 block 2.

Bit 5: DBC11. This bit allows posted DBC11 interrupts to be read, cleared, or set for row 1 block 1.

Bit 4: DBC10. This bit allows posted DBC10 interrupts to be read, cleared, or set for row 1 block 0.

Bit 3: DCC03. This bit allows posted DCC03 interrupts to be read, cleared, or set for row 0 block 3.

Bit 2: DCC02. This bit allows posted DCC02 interrupts to be read, cleared, or set for row 0 block 2.

Bit 1: DBC01. This bit allows posted DBC01 interrupts to be read, cleared, or set for row 0 block 1.

Bit 0: DBC00. This bit allows posted DBC00 interrupts to be read, cleared, or set for row 0 block 0.

For additional information, refer to the INT_CLR1 register on page 201.

5.3.1.3 INT_CLR2 Register

Bit 3: DCC23. This bit allows posted DCC23 interrupts to be read, cleared, or set for row 2 block 3.

Bit 2: DCC22. This bit allows posted DCC22 interrupts to be read, cleared, or set for row 2 block 2.

Bit 1: DBC21. This bit allows posted DBC21 interrupts to be read, cleared, or set for row 2 block 1.

Bit 0: DBC20. This bit allows posted DBC20 interrupts to be read, cleared, or set for row 2 block 0.

For additional information, refer to the INT_CLR2 register on page 203.

5.3.1.4 INT_CLR3 Register

Bit 5: Analog 5. This bit allows posted analog column 5 interrupts to be read, cleared, or set.

Bit 4: Analog 4. This bit allows posted analog column 4 interrupts to be read, cleared, or set.

Bit 3: RTC. This bit allows posted RTC interrupts to be read, cleared, or set.

Bit 2: SARADC. This bit allows posted SARADC interrupts to be read, cleared, or set.

Bit 1: I2C1. This bit allows posted I2C1 interrupts to be read, cleared, or set.

Bit 0: I2C0. This bit allows posted I2C0 interrupts to be read, cleared, or set.

For additional information, refer to the INT_CLR3 register on page 204.

5.3.2 INT_MSKx Registers

Address	Name	Bit 7	Bit 6	Bit 5	Bit 4	Bit 3	Bit 2	Bit 1	Bit 0	Access
0,DEh	INT_MSK3	ENSWINT		Analog 5	Analog 4	RTC	SARADC	I2C1	I2C0	RW : 00
0,DFh	INT_MSK2					DCC23	DCC22	DBC21	DBC20	RW : 00
0,E0h	INT_MSK0	VC3	Sleep	GPIO	Analog 3	Analog 2	Analog 1	Analog 0	V Monitor	RW : 00
0,E1h	INT_MSK1	DCC13	DCC12	DBC11	DBC10	DCC03	DCC02	DBC01	DBC00	RW : 00

The Interrupt Mask Registers (INT_MSKx) are used to enable the individual interrupt sources' ability to create pending interrupts.

There are four interrupt ***mask*** registers (INT_MSK0, INT_MSK1, INT_MSK2, and INT_MSK3) which may be referred to in general as INT_MSKx. If cleared, each bit in an INT_MSKx register prevents a posted interrupt from becoming a pending interrupt (input to the priority encoder). However, an interrupt can still post even if its mask bit is zero. All INT_MSKx bits are independent of all other INT_MSKx bits.

If an INT_MSKx bit is set, the interrupt source associated with that mask bit may generate an interrupt that will become a pending interrupt. For example, if INT_MSK0[5] is set and at least one GPIO pin is configured to generate an interrupt, the interrupt controller will allow a GPIO interrupt request to post and become a pending interrupt for the M8C to respond to. If a higher priority interrupt is generated before the M8C responds to the GPIO interrupt, the higher priority interrupt will be responded to and not the GPIO interrupt.

Each interrupt source may require configuration at a block level. Refer to the other chapters in this manual for information on how to configure an individual interrupt source.

5.3.2.1 INT_MSK3 Register

Bit 7: ENSWINT. This bit is a special non-mask bit that controls the behavior of the INT_CLRx registers. See the INT_CLRx register in this section for more information.

Bit 5: Analog 5. This bit allows posted analog column 5 interrupts to be read, masked, or set.

Bit 4: Analog 4. This bit allows posted analog column 4 interrupts to be read, masked, or set.

Bit 3: RTC. This bit allows posted RTC interrupts to be read, masked, or set.

Bit 2: SARADC. This bit allows posted SARADC interrupts to be read, masked, or set.

Bit 1: I2C1. This bit allows posted I2C1 interrupts to be read, masked, or set.

Bit 0: I2C0. This bit allows posted I2C0 interrupts to be read, masked, or set.

For additional information, refer to the INT_MSK3 register on page 206.

5.3.2.2 INT_MSK2 Register

Depending on the digital row characteristics of your PSoC device (see the table titled "CY8C28xxx Device Characteristics" on page 24), you may not be able to use this register. The bits in this register are only for PSoC devices with 4 and 3 digital rows.

Bit 3: DCC23. This bit allows posted DCC23 interrupts to be read, masked, or set for row 2 block 3.

Bit 2: DCC22. This bit allows posted DCC22 interrupts to be read, masked, or set for row 2 block 2.

Bit 1: DBC21. This bit allows posted DBC21 interrupts to be read, masked, or set for row 2 block 1.

Bit 0: DBC20. This bit allows posted DBC20 interrupts to be read, masked, or set for row 2 block 0.

For additional information, refer to the INT_MSK2 register on page 207.

5.3.2.3 INT_MSK0 Register

Depending on the analog column characteristics of your PSoC device (see the table titled "CY8C28xxx Device Characteristics" on page 24), some bits may not be available in the INT_MSK0 register.

Bit 7: VC3. This bit allows posted VC3 interrupts to be read, masked, or set.

Bit 6: Sleep. This bit allows posted sleep interrupts to be read, masked, or set.

Bit 5: GPIO. This bit allows posted GPIO interrupts to be read, masked, or set.

Bit 4: Analog 3. This bit allows posted analog column 3 interrupts to be read, masked, or set.

Bit 3: Analog 2. This bit allows posted analog column 2 interrupts to be read, masked, or set.

Bit 2: Analog 1. This bit allows posted analog column 1 interrupts to be read, masked, or set.

Bit 1: Analog 0. This bit allows posted analog column 0 interrupts to be read, masked, or set.

Bit 0: V Monitor. This bit allows posted V monitor interrupts to be read, masked, or set.

For additional information, refer to the INT_MSK0 register on page 208.

5.3.2.4 INT_MSK1 Register

Depending on the digital row characteristics of your PSoC device (see the table titled "CY8C28xxx Device Characteristics" on page 24), some bits may not be available in the INT_MSK1 register. The bits in this register are available for all PSoC devices, with the exception of one digital row devices.

Bit 7: DCC13. This bit allows posted DCC13 interrupts to be read, masked, or set for row 1 block 3.

Bit 6: DCC12. This bit allows posted DCC12 interrupts to be read, masked, or set for row 1 block 2.

Bit 5: DBC11. This bit allows posted DBC11 interrupts to be read, masked, or set for row 1 block 1.

Bit 4: DBC10. This bit allows posted DBC10 interrupts to be read, masked, or set for row 1 block 0.

Bit 3: DCC03. This bit allows posted DCC03 interrupts to be read, masked, or set for row 0 block 3.

Bit 2: DCC02. This bit allows posted DCC02 interrupts to be read, masked, or set for row 0 block 2.

Bit 1: DBC01. This bit allows posted DBC01 interrupts to be read, masked, or set for row 0 block 1.

Bit 0: DBC00. This bit allows posted DBC00 interrupts to be read, masked, or set for row 0 block 0.

For additional information, refer to the INT_MSK1 register on page 209.

5.3.3 INT_VC Register

Address	Name	Bit 7	Bit 6	Bit 5	Bit 4	Bit 3	Bit 2	Bit 1	Bit 0	Access
0,E2h	INT_VC	Pending Interrupt[7:0]								RC : 00

LEGEND
C Clearable register or bits.

The Interrupt Vector Clear Register (INT_VC) returns the next pending interrupt and clears all pending interrupts when written.

Bits 7 to 0: Pending Interrupt[7:0]. When the register is read, the ***least significant byte (LSB)***, of the highest priority pending interrupt, is returned. For example, if the GPIO and I^2C interrupts were pending and the INT_VC register was read, the value 1Ch will be read. However, if no interrupt were pending, the value 00h will be returned. This is the reset vector in the interrupt table; however, reading 00h from the INT_VC register should not be considered an indication that a system reset is pending. Rather, reading 00h from the INT_VC register simply indicates that there are no pending interrupts. The highest priority interrupt, indicated by the value returned by a read of the INT_VC register, is removed from the list of pending interrupts when the M8C services an interrupt.

Reading the INT_VC register has limited usefulness. If interrupts are enabled, a read to the INT_VC register cannot determine that an interrupt was pending before the interrupt was actually taken. However, while in an interrupt, a user may wish to read the INT_VC register to see what the next interrupt will be. When the INT_VC register is written, with any value, all pending and posted interrupts are cleared by asserting the clear line for each interrupt.

For additional information, refer to the INT_VC register on page 210.

5.3.4 CPU_F Register

Address	Name	Bit 7	Bit 6	Bit 5	Bit 4	Bit 3	Bit 2	Bit 1	Bit 0	Access
x,F7h	CPU_F	PgMode[1:0]			XIO		Carry	Zero	GIE	RL : 02

LEGEND
L The AND F, expr; OR F, expr; and XOR F, expr flag instructions can be used to modify this register.
x An “x” before the comma in the address field indicates that this register can be read or written to no matter what bank is used.

The M8C Flag Register (CPU_F) provides read access to the M8C flags. Note that only the GIE (Global Interrupt Enable) bit is related to the interrupt controller.

Bits 7 to 1. The CPU_F register holds bits that are used by different resources. For information on the other bits in this register, refer to the CPU Core (M8C) chapter on page 39.

Bit 0: GIE. The state of the Global Interrupt Enable bit determines whether interrupts (by way of the IRQ) will be recognized by the M8C. This bit is set or cleared by the user, using the flag-logic instructions (for example, OR F, 1). GIE is also cleared automatically by the M8C upon entering the interrupt service routine (ISR), after the flag byte has been stored on the stack, preventing nested interrupts. Note that the bit can be set in an ISR if desired.

For GIE = 1, the M8C samples the IRQ input for each instruction. For GIE = 0, the M8C ignores the IRQ.

For additional information, refer to the CPU_F register on page 214.

6. General Purpose I/O (GPIO)

This chapter discusses the General Purpose I/O (GPIO) and its associated registers, which is the circuit responsible for interfacing to the I/O pins of a PSoC® device. The GPIO blocks provide the interface between the M8C core and the outside world. They offer a large number of configurations to support several types of ***input/output (I/O)*** operations for both digital and analog systems. For a complete table of the GPIO registers, refer to the "Summary Table of the Core Registers" on page 36. For a quick reference of all PSoC registers in address order, refer to the Register Details chapter on page 125.

6.1 Architectural Description

The GPIO contains input buffers, output drivers, register bit storage, and configuration logic for connecting the PSoC device to the outside world.

I/O Ports are arranged with (up to) 8 bits per port. Each full port contains eight identical GPIO blocks, with connections to identify a unique address and register bit number for each block. Each GPIO block can be used for the following types of I/O:

- Digital I/O (digital input and output controlled by software)
- Global I/O (digital PSoC block input and output)
- Analog I/O (analog PSoC block input and output)

Each I/O pin also has several drive modes, as well as interrupt capabilities. While all GPIO pins are identical and provide digital I/O, some pins may not connect internally to analog functions.

The main block diagram for the GPIO block is shown in Figure 6-1. Note that some pins do not have all of the functionality shown, depending on internal connections.

The CY8C28x13, CY8C28x33, CY8C28x43, CY8C28x45, and CY8C28x52 PSoC devices contain an enhanced capability to connect any GPIO to an internal analog bus. This is described in detail in the I/O Analog Multiplexer chapter on page 525.

6.1.1 Digital I/O

One of the basic operations of the GPIO ports is to allow the M8C to send information out of the PSoC device and get information into the M8C from outside the PSoC device. This is accomplished by way of the port data register (PRTxDR). Writes from the M8C to the PRTxDR register store the data state, one bit per GPIO. In the standard non-bypass mode, the pin drivers drive the pin in response to this data bit, with a drive strength determined by the Drive mode setting (see Figure 6-1). The actual voltage on the pin depends on the Drive mode and the external ***load***.

The M8C can read the value of a port by reading the PRTxDR register address. When the M8C reads the PRTxDR register address, the current value of the pin voltage is translated into a logic value and returned to the M8C. Note that the pin voltage can represent a different logic value than the last value written to the PRTxDR register. This is an important distinction to remember in situations such as the use of a read modify write to a PRTxDR register. Examples of read modify write instructions include ***AND***, ***OR***, and ***XOR***.

The following is an example of how a read modify write, to a PRTxDR register, can have an unexpected and even indeterminate result in certain systems. Consider a scenario where all bits of Port 1 on the PSoC device are in the strong 1 resistive 0 drive mode; so that in some cases, the system the PSoC is in may pull up one of the bits.

```
mov   reg[PRT1DR], 0x00
or    reg[PRT1DR], 0x80
```

In the first line of code above, writing a 0x00 to the port will not affect any bits that happen to be driven by the system the PSoC is in. However, in the second line of code, it can not guarantee that only bit 7 will be the one set to a strong 1. Because the OR instruction will first read the port, any bits that are in the pull up state will be read as a '1'. These ones will then be written back to the port. When this happens, the pin will go in to a strong 1 state; therefore, if the pull up condition ends in the system, the PSoC will keep the pin value at a logic 1.

6.1.2 Global I/O

The GPIO ports are also used to interconnect signals to and from the digital PSoC blocks, as global inputs or outputs.

The global I/O feature of each GPIO (port pin) is off by default. To access the feature, two parameters must be changed. To configure a GPIO as a global input, the port global select bit must be set for the desired GPIO using the PRTxGS register. This sets BYP = 1 in Figure 6-1 and disconnects the output of the PRTxDR register from the pin. Also, the Drive mode for the GPIO must be set to the digital High-Z state. (Refer to the "PRTxDMx Registers" on page 77 for more information.) To configure a GPIO as a global output, the port global select bit must again be set. But in this case, the drive state must be set to any of the non-High-Z states.

6.1.3 Analog Input

Analog signals can pass into the PSoC device core from PSoC device pins through the block's AOUT pin. This provides a resistive ***path*** (~300 ohms) directly through the GPIO block. For analog modes, the GPIO block is typically configured into a High ***impedance*** Analog Drive mode (High-Z). The mode turns off the Schmitt trigger on the input path, which may reduce power consumption and decrease internal switching noise when using a particular I/O as an analog input. Refer to the Electrical Specifications chapter in the individual PSoC device data sheet.

Figure 6-1. GPIO Block Diagram

Drive Modes

DM2	DM1	DM0	Drive Mode	Diagram Number	Data = 0	Data = 1
0	0	0	Resistive Pull Down	0	Resistive	Strong
0	0	1	Strong Drive	1	Strong	Strong
0	1	0	High Impedance	2	Hi-Z	Hi-Z
0	1	1	Resistive Pull Up	3	Strong	Resistive
1	0	0	Open Drain, Drives High	4	Hi-Z	Strong (Slow)
1	0	1	Slow Strong Drive	5	Strong (Slow)	Strong (Slow)
1	1	0	High Impedance Analog	6	Hi-Z	Hi-Z
1	1	1	Open Drain, Drives Low	7	Strong (Slow)	Hi-Z

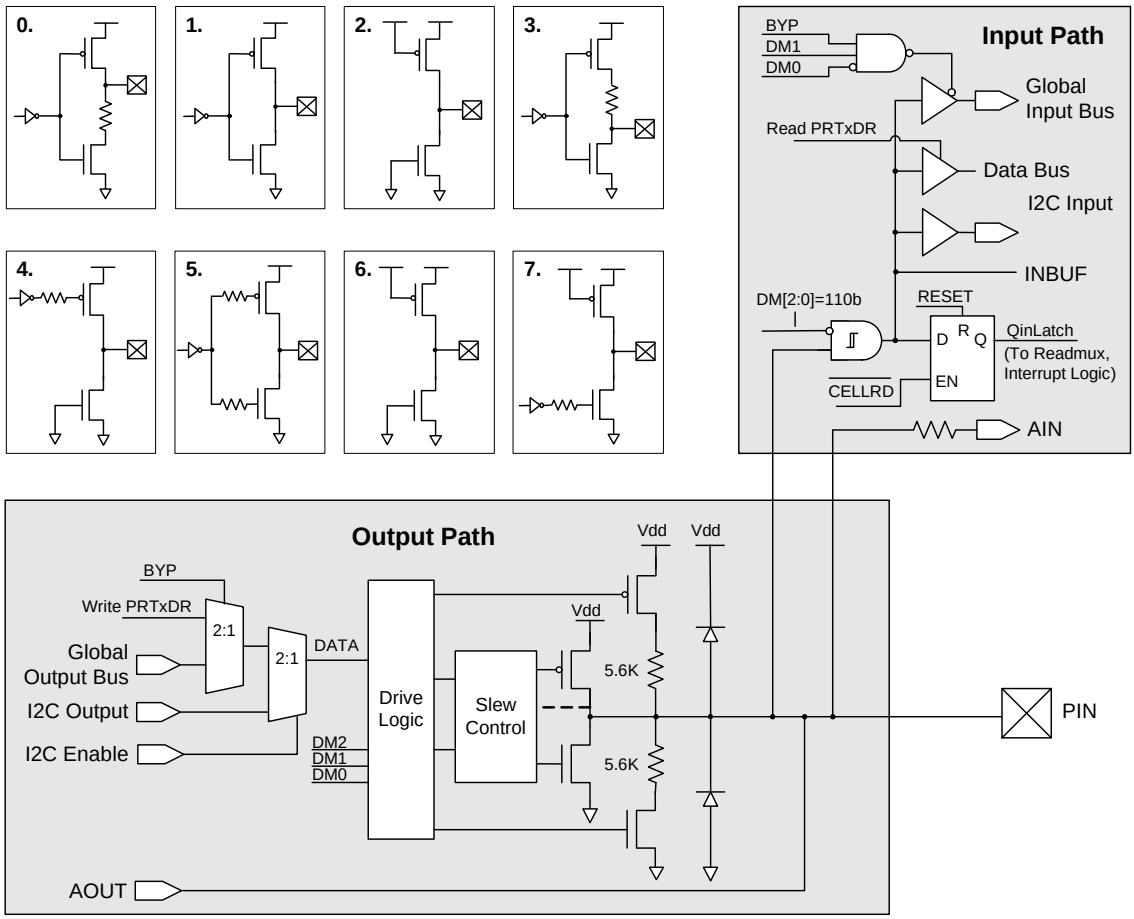

6.1.4 GPIO Block Interrupts

Each GPIO block can be individually configured for interrupt capability. Blocks are configured by pin interrupt enables and also by selection of the interrupt state. Blocks can be set to interrupt when the pin is high, low, or when it changes from the last time it was read. The block provides an open-drain interrupt output (INTO) that is connected to other GPIO blocks in a wire-OR fashion.

All pin interrupts that are wire-ORed together are tied to the same system GPIO interrupt. Therefore, if interrupts are enabled on multiple pins, the user's interrupt service routine must provide a mechanism to determine which pin was the source of the interrupt.

Using a GPIO interrupt requires the following steps:

1. Set the Interrupt mode in the GPIO pin block.
2. Enable the bit interrupt in the GPIO block.
3. Set the mask bit for the (global) GPIO interrupt.
4. Assert the overall Global Interrupt Enable.

The first two steps, bit interrupt enable and Interrupt mode, are set at the GPIO block level (that is, at each port pin), by way of the block's configuration registers.

The last two steps are common to all interrupts and are described in the Interrupt Controller chapter on page 65.

At the GPIO block level, asserting the INTO line depends only on the bit interrupt enable and the state of the pin relative to the chosen Interrupt mode. At the PSoC device level, due to their wire-OR nature, the GPIO interrupts are neither true edge-sensitive interrupts nor true level-sensitive interrupts. They are considered edge-sensitive for asserting, but level-sensitive for release of the wire-OR interrupt line.

If no GPIO interrupts are asserting, a GPIO interrupt will occur whenever a GPIO pin interrupt enable is set and the GPIO pin transitions, if not already transitioned, appropriately high or low, to match the interrupt mode configuration. When this happens, the INTO line will pull low to assert the GPIO interrupt. This assumes the other system-level enables are on, such as setting the global GPIO interrupt enable and the Global Interrupt Enable. Setting the pin interrupt enable may immediately assert INTO, if the Interrupt mode conditions are already being met at the pin.

After INTO pulls low, it will continue to hold INTO low until one of these conditions changes.

- The pin interrupt enable is cleared
- The voltage at pin transitions to the opposite state
- In interrupt-on-change mode, the GPIO data register is read, thus setting the local interrupt level to the opposite state
- The Interrupt mode is changed so that the current pin state does not create an interrupt

When one of these conditions is met, the INTO releases. At this point, another GPIO pin (or this pin again) can assert its INTO pin, pulling the common line low to assert a new interrupt.

Note that the GPIO data register state is latched during read operation. Interrupt-on-change may not behave as expected if the input signal changes during the metastability time of the latch, that is, when the GPIO is being read.

Note the following behavior from this level-release feature. If one pin is asserting INTO and then a second pin asserts its INTO, when the first pin releases its INTO, the second pin is already driving INTO and thus no change is seen (that is, no new interrupt is asserted on the GPIO interrupt). Care must be taken, using polling or the states of the GPIO pin and Global Interrupt Enables, to catch all interrupts among a set of wire-OR GPIO blocks.

Figure 6-2 shows the interrupt logic portion of the block.

Figure 6-2. GPIO Interrupt Logic Diagram

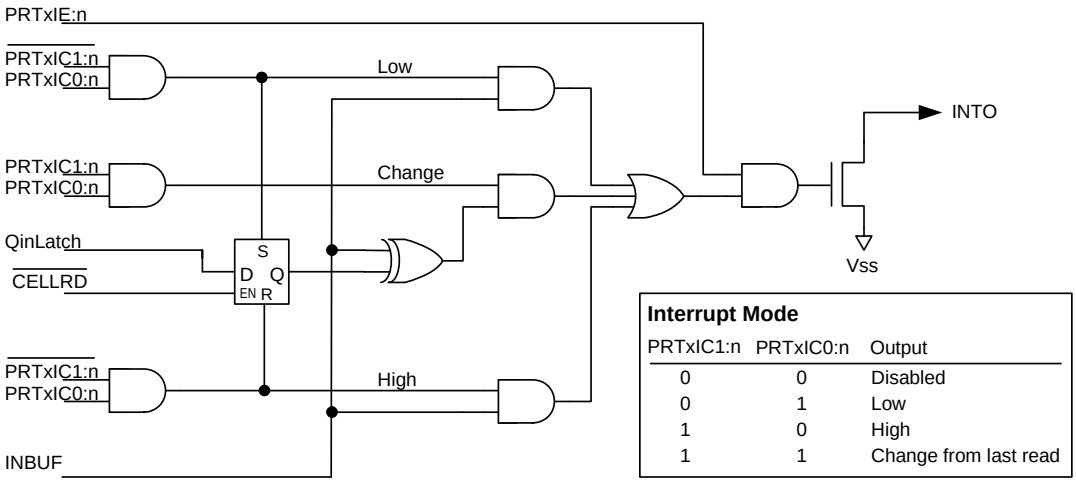

Interrupt Mode

PRTxIC1:n	PRTxIC0:n	Output
0	0	Disabled
0	1	Low
1	0	High
1	1	Change from last read

6.2 Register Definitions

The following registers are associated with the General Purpose I/O (GPIO) and are listed in address order. The register descriptions in this section have an associated register table showing the bit structure for that register. For a complete table of GPIO registers, refer to the "Summary Table of the Core Registers" on page 36.

For a selected GPIO block, the individual registers are addressed in the Summary Table of the Core Registers. In the register names, the 'x' is the port number, configured at the PSoC device level (x = 0 to 7 typically). All register values are readable, except for the PRTxDR register; reads of this register return the pin state instead of the register bit state.

6.2.1 PRTxDR Registers

Address	Name	Bit 7	Bit 6	Bit 5	Bit 4	Bit 3	Bit 2	Bit 1	Bit 0	Access
0,xxh	PRTxDR	Data[7:0]								RW : 00

LEGEND
xx An "x" after the comma in the address field indicates that there are multiple instances of the register. For an expanded address listing of these registers, refer to the "Core Register Summary" on page 36.

The Port Data Register (PRTxDR) allows for write or read access of the current logical equivalent of the voltage on the pin.

Bits 7 to 0: Data[7:0]. Writing the PRTxDR register bits set the output drive state for the pin to high (for DR = 1) or low (DR = 0), unless a bypass mode is selected (either I^2C Enable = 1 or the global select register written high).

Reading the PRTxDR register returns the actual pin state, as seen by the input buffer. This may not be the same as the expected output state, if the load pulls the pin more strongly than the pin's configured output drive. See "Digital I/O" on page 73 for a detailed discussion of digital I/O.

For additional information, refer to the PRTxDR register on page 127.

6.2.2 PRTxIE Registers

Address	Name	Bit 7	Bit 6	Bit 5	Bit 4	Bit 3	Bit 2	Bit 1	Bit 0	Access
0,xxh	PRTxIE	Interrupt Enables[7:0]								RW : 00

LEGEND
xx An "x" after the comma in the address field indicates that there are multiple instances of the register. For an expanded address listing of these registers, refer to the "Core Register Summary" on page 36.

The Port Interrupt Enable Register (PRTxIE) is used to enable/disable the interrupt enable internal to the GPIO block.

Bits 7 to 0: Interrupt Enables[7:0]. A '1' enables the INTO output at the block and a '0' disables INTO so it is only High-Z.

For additional information, refer to the PRTxIE register on page 128.

6.2.3 PRTxGS Registers

Address	Name	Bit 7	Bit 6	Bit 5	Bit 4	Bit 3	Bit 2	Bit 1	Bit 0	Access
0,xxh	PRTxGS	Global Select[7:0]								RW : 00

LEGEND
xx An "x" after the comma in the address field indicates that there are multiple instances of the register. For an expanded address listing of these registers, refer to the "Core Register Summary" on page 36.

The Port Global Select Register (PRTxGS) is used to select the block for connection to global inputs or outputs.

Bits 7 to 0: Global Select[7:0]. Writing this register high enables the global bypass (BYP = 1 in Figure 6-1). If the Drive mode is set to digital High-Z (DM[2:0] = 010b), then the pin is selected for global input (PIN drives to the Global Input Bus). In non-High-Z modes, the block is selected for global output (the Global Output Bus drives to PIN), bypassing the data register value (assuming I^2C Enable = 0).

If the PRTxGS register is written to zero, the global in/out function is disabled for the pin and the pin reflects the value of PRT_DR.

For additional information, refer to the PRTxGS register on page 129.

6.2.4 PRTxDMx Registers

Address	Name	Bit 7	Bit 6	Bit 5	Bit 4	Bit 3	Bit 2	Bit 1	Bit 0	Access
0,xxh	PRTxDM2	Drive Mode 2[7:0]								RW : FFh
1,xxh	PRTxDM0	Drive Mode 0[7:0]								RW : 00
1,xxh	PRTxDM1	Drive Mode 1[7:0]								RW : FFh

LEGEND
xx An "x" after the comma in the address field indicates that there are multiple instances of the register. For an expanded address listing of these registers, refer to the "Core Register Summary" on page 36.

The Port Drive Mode Bit Registers (PRTxDMx) are used to specify the Drive mode for GPIO pins.

Bits 7 to 0: Drive Mode x[7:0]. In the PRTxDMx registers there are eight possible drive modes for each port pin. Three mode bits are required to select one of these modes, and these three bits are spread into three different registers (PRTxDM0, PRTxDM1, and PRTxDM2). The bit position of the effected port pin (for example, Pin[2] in Port 0) is the same as the bit position of each of the three drive mode register bits that control the Drive mode for that pin (for example, bit[2] in PRT0DM0, bit[2] in PRT0DM1, and bit[2] in PRT0DM2). The three bits from the three registers are treated as a group. These are referred to as DM2, DM1, and DM0, or together as DM[2:0]. Drive modes are shown in Table 6-1.

For analog I/O, the Drive mode should be set to one of the High-Z modes, either 010b or 110b. The 110b mode has the advantage that the block's digital input buffer is disabled, so no ***crowbar*** current flows even when the analog input is not close to either power rail. When digital inputs are needed on the same pin as analog inputs, the 010b Drive mode should be used. If the 110b Drive mode is used, the pin will always be read as a zero by the CPU and the pin will not be able to generate a useful interrupt. (It is not strictly required that a High-Z mode be selected for analog operation.)

For global input modes, the Drive mode must be set to 010b.

Table 6-1. Pin Drive Modes

Drive Modes			Pin State	Description
DM2	DM1	DM0		
0	0	0	Resistive pull down	Strong high, resistive low
0	0	1	Strong drive	Strong high, strong low
0	1	0	High impedance	High-Z high and low, digital input enabled
0	1	1	Resistive pull up	Resistive high, strong low
1	0	0	Open drain high	Slow strong high, High-Z low
1	0	1	Slow strong drive	Slow strong high, slow strong low
1	1	0	High impedance, analog (**reset state**)	High-Z high and low, digital input disabled (for zero power) (**reset state**)
1	1	1	Open drain low	Slow strong low, High-Z high

The GPIO provides a default Drive mode of high impedance, analog (High-Z). This is achieved by forcing the reset state of all PRTxDM1 and PRTxDM2 registers to FFh.

The resistive drive modes place a ***resistance*** in series with the output, for low outputs (mode 000b) or high outputs (mode 011b). Strong Drive mode 001b gives the fastest edges at high DC drive strength. Mode 101b gives the same drive strength but with slower edges. The open-drain modes (100b and 111b) also use the slower edge rate drive. These modes enable open-drain functions such as I^2C mode 111b (although the slow edge rate is not slow enough to meet the I^2C fast mode specification).

For additional information, refer to the PRTxDM2 register on page 130, the PRTxDM0 register on page 218, and the PRTxDM1 register on page 219.

6.2.5 PRTxICx Registers

Address	Name	Bit 7	Bit 6	Bit 5	Bit 4	Bit 3	Bit 2	Bit 1	Bit 0	Access
1,xxh	PRTxIC0	Interrupt Control 0[7:0]								RW : 00
1,xxh	PRTxIC1	Interrupt Control 1[7:0]								RW : 00

LEGEND
xx An "x" after the comma in the address field indicates that there are multiple instances of the register. For an expanded address listing of these registers, refer to the "Core Register Summary" on page 36.

The Port Interrupt Control Registers (PRTxIC1 and PRTxIC0) are used to specify the Interrupt mode for GPIO pins.

Bits 7 to 0: Interrupt Control x[7:0]. In the PRTxICx registers, the Interrupt mode for the pin is determined by bits in these two registers. These are referred to as IC1 and IC0, or together as IC[1:0].

There are four possible interrupt modes for each port pin. Two mode bits are required to select one of these modes and these two bits are spread into two different registers (PRTxIC0 and PRTxIC1). The bit position of the effected port pin (for example, Pin[2] in Port 0) is the same as the bit position of each of the interrupt control register bits that control the Interrupt mode for that pin (for example, bit[2] in PRT0IC0 and bit[2] in PRT0IC1). The two bits from the two registers are treated as a group.

The Interrupt mode must be set to one of the non-zero modes listed in Table 6-2, to get an interrupt from the pin.

The GPIO Interrupt mode “disabled” (00b) disables interrupts from the pin, even if the GPIO’s bit interrupt enable is on (from the PRTxIE register).

Interrupt mode 01b means that the block will assert the interrupt line (INTO) when the pin voltage is low, providing the block’s bit interrupt enable line is set (high).

Interrupt mode 10b means that the block will assert the interrupt line (INTO) when the pin voltage is high, providing the block’s bit interrupt enable line is set (high).

Interrupt mode 11b means that the block will assert the interrupt line (INTO) when the pin voltage is the opposite of the last state read from the pin, providing the block’s bit interrupt enable line is set high. This mode switches between low mode and high mode, depending on the last value that was read from the port during reads of the data register (PRTxDR). If the last value read from the GPIO was ‘0’, the GPIO will subsequently be in Interrupt High mode. If the last value read from the GPIO was ‘1’, the GPIO will then be in Interrupt Low mode.

Table 6-2. GPIO Interrupt Modes

Interrupt Modes		Description
IC1	IC0	
0	0	Bit interrupt disabled, INTO deasserted
0	1	Assert INTO when PIN = low
1	0	Assert INTO when PIN = high
1	1	Assert INTO when PIN = change from last read

Figure 6-3. GPIO Interrupt Mode 11b

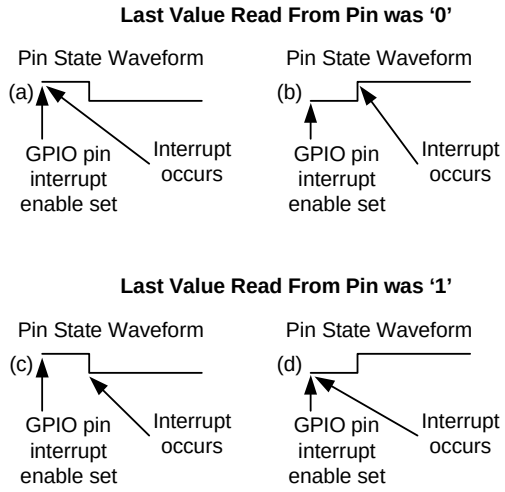

Figure 6-3 assumes that the GIE is set, GPIO interrupt mask is set, and that the GPIO Interrupt mode has been set to 11b. The Change Interrupt mode is different from the other modes, in that it relies on the value of the GPIO’s read latch to determine if the pin state has changed. Therefore, the port that contains the GPIO in question must be read during every interrupt service routine. If the port is not read, the Interrupt mode will act as if it is in high mode when the latch value is ‘0’ and low mode when the latch value is ‘1’.

For additional information, refer to the PRTxIC0 register on page 220 and the PRTxIC1 register on page 221.

7. Analog Output Drivers

This chapter presents the Analog Output Drivers and their associated register. The analog output drivers provide a means for driving analog signals off the PSoC® device. For a quick reference of all PSoC registers in address order, refer to the Register Details chapter on page 125. For information on the analog system, refer to the "Analog System" on page 383.

7.1 Architectural Description

Depending on which PSoC device you have (see Table 7-1), the PSoC device has up to four analog drivers used to output analog values on port pins. Note that there are no analog output drivers for the CY8C28x13 and CY8C28x03 devices.

Table 7-1. PSoC Analog Output Drivers

Port Pin	CY8C28x03	CY8C28x13	CY8C28x23	CY8C28x33	CY8C28x43	CY8C28x45	CY8C28x52
P0[5]			✓	✓	✓	✓	✓
P0[4]					✓	✓	✓
P0[3]			✓	✓	✓	✓	✓
P0[2]					✓	✓	✓

Each of these drivers is a resource available to all the ***analog blocks*** in a particular analog column. Therefore, the number of analog output drivers will match the number of analog columns in a device. The user must select no more than one analog block per column to drive a signal on its analog output bus (ABUS), to serve as the input to the analog driver for that column. The output from the analog output driver for each column can be enabled and disabled using the Analog Output Driver register ABF_CR0. If the analog output driver is enabled, then it must have an analog block driving the ABUS for that column. Otherwise, the analog output driver can enter a high current consumption mode.

Figure 7-1 illustrates the drivers and their relationship within the analog array. For a detailed drawing of the analog output drivers in relation to the analog system, refer to the Analog Input Configuration chapter on page 417.

Figure 7-1. Analog Output Drivers

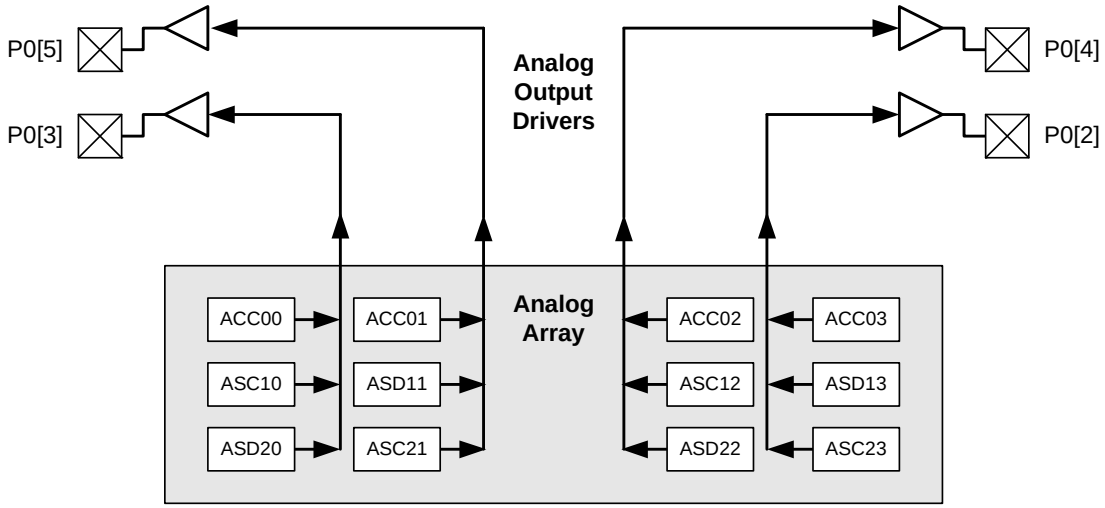

7.2 Register Definitions

The following register is associated with the Analog Output Drivers. The register description has an associated register table showing the bit structure of the register. The bits that are grayed out in the following table are reserved bits and are not detailed in the register description that follows. Reserved bits should always be written with a value of '0'. Depending on the number of analog columns your PSoC device has (see the Cols. column in the register table), some bits may be reserved (refer to the table titled "CY8C28xxx Device Characteristics" on page 24).

7.2.1 ABF_CR0 Register

Add.	Name	Cols.	Bit 7	Bit 6	Bit 5	Bit 4	Bit 3	Bit 2	Bit 1	Bit 0	Access
1,62h	ABF_CR0	4	ACol1Mux	ACol2Mux	ABUF1EN	ABUF2EN	ABUF0EN	ABUF3EN	Bypass	PWR	RW : 00
		2	ACol1Mux		ABUF1EN		ABUF0EN		Bypass	PWR	

The Analog Output Buffer Control Register 0 (ABF_CR0) controls analog input muxes from Port 0 and the output buffer amplifiers that drive column outputs to device pins.

For more information on bits 7 and 6, see the Analog Input Configuration chapter on page 417.

Bit 7: ACol1MUX. A mux selects the output of column 0 input mux or column 1 input mux. When set, this bit sets the column 1 input to column 0 input mux output.

Bit 6: ACol2MUX. A mux selects the output of column 2 input mux or column 3 input mux. When set, this bit sets the column 2 input to column 3 input mux output.

Bits 5 to 2: ABUFxEN. These bits enable or disable the column output amplifiers.

Bit 1: Bypass. Bypass mode connects the analog output driver input directly to the output. When this bit is set, all analog output drivers will be in bypass mode. This is a high impedance connection used primarily for measurement and calibration of internal references. Use of this feature is not recommended for customer designs.

Bit 0: PWR. This bit is used to set the power level of the analog output drivers. When this bit is set, all of the analog output drivers will be in a High Power mode.

For additional information, refer to the ABF_CR0 register on page 238.

8. Internal Main Oscillator (IMO)

This chapter presents the Internal Main Oscillator (IMO) and its associated registers. The IMO produces clock signals of 24 MHz and 48 MHz. For a complete table of the IMO registers, refer to the "Summary Table of the Core Registers" on page 36. For a quick reference of all PSoC® registers in address order, refer to the Register Details chapter on page 125.

8.1 Architectural Description

The Internal Main Oscillator (IMO) outputs two clocks: a SYSCLK, which can be the internal 24 MHz clock or an external clock, and a SYSCLKX2 that is always twice the SYSCLK frequency. In the absence of a high-precision input source from the 32.768 kHz ***crystal oscillator***, the accuracy of the internal 24/48 MHz clocks will be ±2.5% over temperature variation and two voltage ranges (3.3 V ± 0.3 V and 5.0 V ± 0.25 V). No external components are required to achieve this level of accuracy.

There is an option to phase lock this oscillator to the External Crystal Oscillator (ECO). The choice of crystal and its inherent accuracy will determine the overall accuracy of the oscillator. The ECO must be stable prior to locking the frequency of the IMO to this reference source.

The ***frequency*** doubler circuit, which produces SYSCLKX2, can be disabled to save power. On CY8C28xxx PSoC devices, lower frequency SYSCLK settings are available by setting the slow IMO (SLIMO) bit in the CPU_SCR1 register. With this bit set and the corresponding factory trim value applied to the IMO_TR register, SYSCLK can be lowered to 6 MHz. This offers lower device power consumption for systems that can operate with the reduced system clock. Slow IMO mode is discussed further in the "Application Description" on page 81.

8.2 Application Description

To save power, the IMO frequency can be reduced from 24 MHz to 6 MHz using the SLIMO bit in the CPU_SCR1 register, in conjunction with the Trim values in the IMO_TR register. How to do this is described in the sections that follow.

8.2.1 Trimming the IMO

An 8-bit register (IMO_TR) is used to trim the IMO. Bit 0 is the LSB and bit 7 is the MSB. The trim step size is approximately 80 kHz.

A factory trim setting is loaded into the IMO_TR register at boot time for 5 V ± 0.25 V operation,. For operation in the voltage ranges of 3.3 V ± 0.3 V, user code must modify the contents of this register with values stored in Flash bank 0 as shown in Table 3-11 on page 53. This is done with a Table Read command to the Supervisory ROM.

8.2.2 Engaging Slow IMO

Forcing CPU_SCR1 register bit 4 high engages the Slow IMO feature. The IMO will immediately drop to a lower frequency. Factory trim settings are stored in Flash bank 0 as shown in Table 3-11 on page 53 for the following voltage/frequency combinations.

Voltage	Normal IMO Frequency	Slow IMO Frequency
5.0 V ± 0.25 V	24 MHz	6 MHz
3.3 V ± 0.3 V	24 MHz	6 MHz

A Table Read command to the Supervisory ROM is performed to set the IMO to the different frequencies.

8.3 Register Definitions

The following registers are associated with the Internal Main Oscillator (IMO). The register descriptions have an associated register table showing the bit structure for that register. The bits in the tables that are grayed out are reserved bits and are not detailed in the register descriptions that follow. Reserved bits should always be written with a value of '0'. For a complete table showing all oscillator registers, refer to the "Summary Table of the Core Registers" on page 36.

8.3.1 CPU_SCR1 Register

Address	Name	Bit 7	Bit 6	Bit 5	Bit 4	Bit 3	Bit 2	Bit 1	Bit 0	Access
x,FEh	CPU_SCR1	IRESS			SLIMO	ECO EXW	ECO EX		IRAMDIS	# : 00

LEGEND
x An "x" before the comma in the address field indicates that this register can be read or written to no matter what bank is used.
Access is bit specific. Refer to the Register Details chapter on page 125 for additional information.

The System Status and Control Register 1 (CPU_SCR1) is used to convey the status and control of events related to internal resets and watchdog reset.

Bit 7: IRESS. The Internal Reset Status bit is a read only bit that may be used to determine if the booting process occurred more than once.

When this bit is set, it indicates that the SROM SWBootReset code was executed more than once. If this bit is not set, the SWBootReset was executed only once. In either case, the SWBootReset code will not allow execution from code stored in Flash until the M8C Core is in a safe operating mode with respect to supply voltage and Flash operation. There is no need for concern when this bit is set. It is provided for systems which may be sensitive to boot time, so that they can determine if the normal one-pass boot time was exceeded. For more information on the SWBootReest code see the Supervisory ROM (SROM) chapter on page 49.

Bit 4: SLIMO. When set, the Slow IMO bit allows the active power dissipation of the PSoC device to be reduced by slowing down the IMO from 24 MHz to 6 MHz. The IMO trim value must also be changed when SLIMO is set (see "Engaging Slow IMO" on page 81). When not in external clocking mode, the IMO is the source for SYSCLK; therefore, when the speed of the IMO changes, so will SYSCLK.

Bit 3: ECO EXW. The ECO Exists Written bit is used as a status bit to indicate that the ECO EX bit has been previously written to. It is read only. When this bit is a '1', this indicates that the CPU_SCR1 register has been written to and is now locked. When this bit is a '0', the register has not been written to since the last reset event.

Bit 2: ECO EX. The ECO Exists bit serves as a flag to the hardware, to indicate that an external crystal ***oscillator*** exists in the system. Just after boot, it may be written *only once* to a value of '1' (crystal exists) or '0' (crystal does not exist). If the bit is '0', a switch-over to the ECO is locked out by hardware. If the bit is '1', hardware allows the firmware to freely switch between the ECO and ILO. It should be written as early as possible after a ***Power On Reset (POR)*** or ***External Reset (XRES)*** event, where it is assumed that program execution integrity is high.

Bit 0: IRAMDIS. The Initialize RAM Disable bit is a control bit that is readable and writeable. The ***default value*** for this bit is '0', which indicates that the maximum amount of SRAM should be initialized on watchdog reset to a value of 00h. When the bit is '1', the minimum amount of SRAM is initialized after a watchdog reset. For more information on this bit, see the "SROM Function Descriptions" on page 50.

For additional information, refer to the CPU_SCR1 register on page 216.

8.3.2 OSC_CR2 Register

Address	Name	Bit 7	Bit 6	Bit 5	Bit 4	Bit 3	Bit 2	Bit 1	Bit 0	Access
1,E2h	OSC_CR2	PLLGAIN			SLP_EXTEND	WDR32_SE	EXTCLKEN	RSVD	SYSCLKX2DIS	RW : 00

The Oscillator Control Register 2 (OSC_CR2) is used to configure various features of internal clock sources and clock nets.

Bit 7: PLLGAIN. This is the only bit in the OSC_CR2 register that directly influences the PLL. When set, this bit keeps the PLL in Low Gain mode. If this bit is held low, the lock time is less than 10 ms. If this bit is held high, the lock time is

on the order of 50 ms. After lock is achieved, it is recommended that this bit be forced high to decrease the jitter on the output. If longer lock time is tolerable, the PLLGAIN bit can be held high all the time.

Bit 4: SLP_EXTEND. This bit allows for extended sleep intervals, up to 16s.

Bit 3: WDR32_SE. If an external 32 kHz crystal is used, this bit allows a choice between the ECO or the ILO as the source of the watchdog timer and sleep timer

Bit 2: EXTCLKEN. When the EXTCLKEN bit is set, the external clock becomes the source for the internal clock tree, SYSCLK, which drives most PSoC device clocking functions. All external and internal signals, including the 32-kHz clock, whether derived from the Internal Low Speed Oscillator (ILO) or the crystal oscillator, are synchronized to this clock source. If an external clock is enabled, PLL mode should be off. The external clock input is located on port P1[4]. When using this input, the pin drive mode should be set to High-Z (not High-Z analog).

Bit 1: RSVD. Reserved bit - This bit should always be 0.

Bit 0: SYSCLKX2DIS. When SYSCLKX2DIS is set, the IMO's doubler is disabled. This will result in a reduction of overall device power, on the order of 1 mA. It is advised that any application that does not require this doubled clock should have it turned off.

For additional information, refer to the OSC_CR2 register on page 298.

8.3.3 IMO_TR Register

Address	Name	Bit 7	Bit 6	Bit 5	Bit 4	Bit 3	Bit 2	Bit 1	Bit 0	Access
1,E8h	IMO_TR	Trim[7:0]								RW : 00

The Internal Main Oscillator Trim Register (IMO_TR) is used to manually center the oscillator's output to a target frequency.

The PSoC device specific value for 5-V operation is loaded into the Internal Main Oscillator Trim register (IMO_TR) at boot time. The Internal Main Oscillator will operate within specified tolerance over a voltage range of 4.75 V to 5.25 V, with no modification of this register. If the PSoC device is operated at a lower voltage, user code must modify the contents of this register. For operation in the voltage range of 3.3 V ± 0.3 V, this is accomplished with a Table Read command to the Supervisory ROM, which will supply a trim value for operation in this range. For operation between these voltage ranges, user code can interpolate the best value using both available factory trim values.

It is strongly recommended that the user not alter the register value, unless Slow IMO mode is used.

Bits 7 to 0: Trim[7:0]. These bits are used to trim the Internal Main Oscillator. A larger value in this register will increase the speed of the oscillator.

For additional information, refer to the IMO_TR register on page 303.

8.3.4 IMO_TR1 Register

Address	Name	Bit 7	Bit 6	Bit 5	Bit 4	Bit 3	Bit 2	Bit 1	Bit 0	Access
1,EFh	IMO_TR1							CATA_Trim[1:0]		RW : 0

The Internal Main Oscillator Trim 1 Register (IMO_TR1) is used to tune CATA current.

Bits 1 to 0: CATA_Trim[1:0]. These bits are used to tune CATA current.

'00' is for largest CATA current (default value).

...

'11' is for smallest CATA current.

For additional information, refer to the IMO_TR1 register on page 307.

9. Internal Low Speed Oscillator (ILO)

This chapter briefly explains the Internal Low Speed Oscillator (ILO) and its associated register. The Internal Low Speed Oscillator produces a 32 kHz clock. For a quick reference of all PSoC® registers in address order, refer to the Register Details chapter on page 125.

9.1 Architectural Description

The Internal Low Speed Oscillator (ILO) is an oscillator with a nominal frequency of 32 kHz. It is used to generate Sleep Wakeup interrupts and watchdog resets. This oscillator can also be used as a clocking source for the digital PSoC blocks.

The oscillator operates in three modes: normal power, low power, and off. The Normal Power mode consumes more current to produce a more accurate frequency. The Low Power mode is always used when the part is in a power down (sleep) state.

9.2 Register Definitions

The following register is associated with the Internal Low Speed Oscillator (ILO). The register description has an associated register table showing the bit structure. The bits in the table that are grayed out are reserved bits and are not detailed in the register description that follows. Note that reserved bits should always be written with a value of ‘0’.

9.2.1 ILO_TR Register

Address	Name	Bit 7	Bit 6	Bit 5	Bit 4	Bit 3	Bit 2	Bit 1	Bit 0	Access
1,E9h	ILO_TR			Bias Trim[1:0]		Freq Trim[3:0]				RW : 00

The Internal Low Speed Oscillator Trim Register (ILO_TR) sets the adjustment for the internal low speed oscillator.

The device specific value, placed in the trim bits of this register at boot time, is based on factory testing. ***It is strongly recommended that the user not alter the values in the register***.

Bits 5 and 4: Bias Trim[1:0]. These two bits are used to set the bias current in the PTAT Current Source. Bit 5 gets inverted, so that a medium bias is selected when both bits are ‘0’. The ***bias current*** is set according to Table 9-1.

Table 9-1. Bias Current in PTAT

Bias Current	Bias Trim [1:0]
Medium Bias	00b
Maximum Bias	01b
Minimum Bias	10b
Reserved	11b

Bits 3 to 0: Freq Trim[3:0]. These four bits are used to trim the frequency. Bit 0 is the LSb and bit 3 is the MSb. Bit 3 gets inverted inside the register.

For additional information, refer to the ILO_TR register on page 304.

10. External Crystal Oscillator (ECO)

This chapter briefly explains the External Crystal Oscillator (ECO) and its associated registers. The 32.768 kHz external crystal oscillator circuit allows the user to replace the internal low speed oscillator with a more precise time source at low cost and low power. For a complete table of the External Crystal Oscillator registers, refer to the "Summary Table of the Core Registers" on page 36. For a quick reference of all PSoC® registers in address order, refer to the Register Details chapter on page 125.

10.1 Architectural Description

The External Crystal Oscillator (ECO) circuit uses an inexpensive watch crystal and two small value capacitors as external components, with all other components being on the PSoC device. The crystal oscillator may be configured to provide a reference to the Internal Main Oscillator (IMO) in PLL mode, for generating a 24 MHz system clock.

The XTALIn and XTALOut pins support connection of a 32.768 kHz watch crystal. To use the external crystal, bit 7 of the Oscillator Control 0 register (OSC_CR0) must be set (the default is off). The only external components needed are the crystal and the two capacitors that connect to Vdd. Note that transitions between the internal and external oscillator domains may produce glitches on the clock bus.

During the process of activating the ECO, there must be a hold-off period before using it as the 32.768 kHz source. This hold-off period is partially implemented in hardware using the sleep timer. Firmware must set up a sleep period of one second (maximum ECO ***settling time***), and then enable the ECO in the OSC_CR0 register. At the one second time-out (the sleep interrupt), the switch is made by hardware to the ECO. If the ECO is subsequently deactivated, the Internal Low Speed Oscillator (ILO) will again be activated and the switch is made back to the ILO immediately.

The ECO Exists bit (ECO EX, bit 2 in the CPU_SCR1 register) is used to control whether the switch-over is allowed or locked. This is a write once bit. It is written early in code execution after a Power On Reset (POR) or external reset (XRES) event. A '1' in this bit indicates to the hardware that a crystal exists in the system, and firmware is allowed to switch back and forth between ECO and ILO operation. If the bit is '0', switch-over to the ECO is locked out. The ECO Exists Written bit (ECO EXW, bit 3 in the CPU_SCR1 register) is read only and is set on the first write to this register. When this bit is '1', it indicates that the state of ECO EX is locked. This is illustrated in Figure 10-1.

Figure 10-1. State Transition Between ECO and ILO Operation

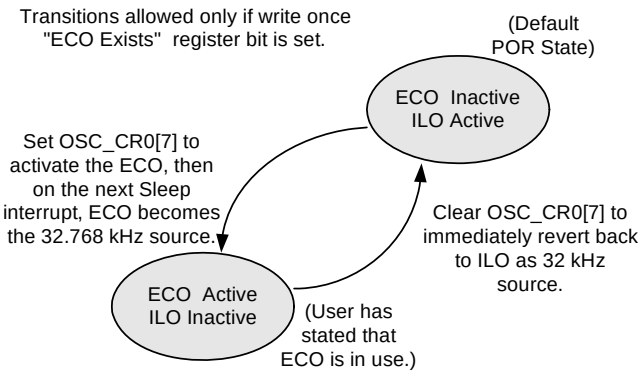

The firmware steps involved in switching between the Internal Low Speed Oscillator (ILO) to the 32.768 kHz External Crystal Oscillator (ECO) are as follows.

1. At reset, the PSoC device begins operation, using the ILO.
2. Set the ECO EX bit to allow crystal operation.
3. Select a sleep interval of one second, using bits[4:3] in the Oscillator Control 0 register (OSC_CR0), as the oscillator stabilization interval.
4. Enable the ECO by setting bit [7] in Oscillator Control 0 register (OSC_CR0) to '1'.
5. The ECO becomes the selected source at the end of the one-second interval on the edge created by the Sleep Interrupt logic. The one-second interval gives the oscillator time to stabilize before it becomes the active source. The sleep interrupt need not be enabled for the switch-over to occur. Reset the sleep timer (if this does not interfere with any ongoing real-time clock operation), to guarantee the interval length. Note that the ILO continues to run until the oscillator is automatically switched over by the sleep timer interrupt.

6. It is strongly advised to wait the one-second stabilization period prior to engaging the PLL mode to lock the IMO frequency to the ECO frequency.

Note 1 The ILO switches back instantaneously by writing the 32 kHz Select Control bit to '0'.

Note 2 If the proper settings are selected in PSoC Designer, these steps are automatically done in *boot.asm*.

Note 3 Transitions between oscillator domains may produce glitches on the 32 kHz clock bus. Functions that require accuracy on the 32 kHz clock should be enabled after the transition in oscillator domains.

10.1.1 ECO External Components

The external component connections and selections of the External Crystal Oscillator are illustrated in Figure 10-2.

- Crystal – 32.768 kHz watch crystal such as Epson C-002RX.
- Capacitors – C1, C2 use NPO ceramic caps.

Use the following equation if you do not employ PLL mode.

$$C1 = C2 = 25\ pF - (Package\ Capacitance) - (Board\ Parasitic\ Capacitance)$$

An error of 1 pF in C1 and C2 gives about a 3 ppm error in frequency.

Figure 10-2. 20-Pin PSoC Example of the ECO External Connections

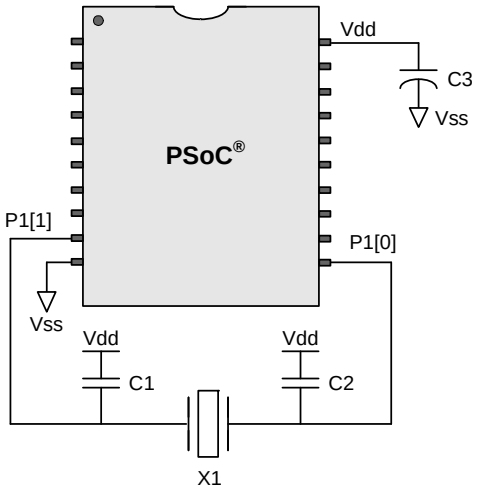

Refer to the PSoC devices' data sheets, in the packaging chapter, for typical package capacitances on crystal pins.

10.2 Register Definitions

The following registers are associated with the External Crystal Oscillator and are listed in address order. Each register description has an associated register table showing the bit structure for that register. The bits that are grayed out in the tables below are reserved bits and are not detailed in the register descriptions. Note that reserved bits should always be written with a value of '0'. For a complete table of external crystal oscillator registers, refer to the "Summary Table of the Core Registers" on page 36.

10.2.1 CPU_SCR1 Register

Address	Name	Bit 7	Bit 6	Bit 5	Bit 4	Bit 3	Bit 2	Bit 1	Bit 0	Access
x,FEh	CPU_SCR1	IRESS			SLIMO	ECO EXW	ECO EX		IRAMDIS	# : 00

LEGEND
x An "x" before the comma in the address field indicates that this register can be read or written to no matter what bank is used.
Access is bit specific. Refer to the Register Details chapter on page 125 for additional information.

The System Status and Control Register 1 (CPU_SCR1) is used to convey the status and control of events related to internal resets and watchdog reset.

Bit 7: IRESS. The Internal Reset Status bit is a read only bit that may be used to determine if the booting process occurred more than once.

When this bit is set, it indicates that the SROM SWBootReset code was executed more than once. If this bit is not set, the SWBootReset was executed only once. In either case, the SWBootReset code will not allow execution from code stored in Flash until the M8C Core is in a safe operating mode with respect to supply voltage and Flash operation. There is no need for concern when this bit is set. It is provided for systems which may be sensitive to boot time, so that they can determine if the normal one-pass boot time was exceeded. For more information on the SWBootReest code see the Supervisory ROM (SROM) chapter on page 49.

Bit 4: SLIMO. When set, the Slow IMO bit allows the active power dissipation of the PSoC device to be reduced by slowing down the IMO from 24 MHz to 6 MHz. The IMO trim value must also be changed when SLIMO is set (see "Engaging Slow IMO" on page 81). When not in external clocking mode, the IMO is the source for SYSCLK; therefore, when the speed of the IMO changes, so will SYSCLK.

Bit 3: ECO EXW. The ECO Exists Written bit is used as a status bit to indicate that the ECO EX bit has been previously written to. It is read only. When this bit is a '1', this indicates that the CPU_SCR1 register has been written to and is now locked. When this bit is a '0', the register has not been written to since the last reset event.

Bit 2: ECO EX. The ECO Exists bit serves as a flag to the hardware, to indicate that an external crystal ***oscillator*** exists in the system. Just after boot, it may be written *only once* to a value of '1' (crystal exists) or '0' (crystal does not exist). If the bit is '0', a switch-over to the ECO is locked out by hardware. If the bit is '1', hardware allows the firmware to freely switch between the ECO and ILO. It should be written as early as possible after a ***Power On Reset (POR)*** or ***External Reset (XRES)*** event, where it is assumed that program execution integrity is high.

Bit 0: IRAMDIS. The Initialize RAM Disable bit is a control bit that is readable and writeable. The ***default value*** for this bit is '0', which indicates that the maximum amount of SRAM should be initialized on watchdog reset to a value of 00h. When the bit is '1', the minimum amount of SRAM is initialized after a watchdog reset. For more information on this bit, see the "SROM Function Descriptions" on page 50.

For additional information, refer to the CPU_SCR1 register on page 216.

10.2.2 OSC_CR0 Register

Address	Name	Bit 7	Bit 6	Bit 5	Bit 4	Bit 3	Bit 2	Bit 1	Bit 0	Access
1,E0h	OSC_CR0	32k Select	PLL Mode	No Buzz	Sleep[1:0]		CPU Speed[2:0]			RW : 00

The Oscillator Control Register 0 (OSC_CR0) is used to configure various features of internal clock sources and clock nets.

Bit 7: 32k Select. By default, the 32 kHz clock source is the Internal Low Speed Oscillator (ILO). Optionally, the 32.768 kHz External Crystal Oscillator (ECO) may be selected.

Bit 6: PLL Mode. This is the only bit in the OSC_CR0 register that directly influences the Phase Locked Loop (PLL). When set, this bit enables the PLL. The EXTCLKEN bit in the OSC_CR2 register should be set low during PLL operation. For information on the PLL, refer to the Phase-Locked Loop (PLL) chapter on page 93.

Bit 5: No Buzz. Normally, when the Sleep bit is set in the CPU_SCR register, all PSoC device systems are powered down, including the bandgap reference. However, to facilitate the detection of ***POR*** and ***LVD*** events at a rate higher than the sleep interval, the bandgap circuit is powered up periodically for about 60 µs at the Sleep System Duty Cycle (set in ECO_TR), which is independent of the sleep interval and typically higher. When the No Buzz bit is set, the Sleep System Duty Cycle value is overridden and the bandgap circuit is forced to be on during sleep. This results in a faster response to an LVD or POR event (continuous detection as opposed to periodic detection), at the expense of higher average sleep current.

Bits 4 and 3: Sleep[1:0]. The available sleep interval selections are shown in Table 10-1. It must be remembered that when the ILO is the selected 32 kHz clock source, sleep intervals are approximate.

Table 10-1. Sleep Interval Selections

OSC_CR2[4]	Sleep Interval OSC_CR0[4:3]	Sleep Timer Clocks	Sleep Period (nominal)	Watchdog Period (nominal)
0	00b (default)	64	1.95 ms	6 ms
0	01b	512	15.6 ms	47 ms
0	10b	4,096	125 ms	375 ms
0	11b	32,768	1 sec	3 sec
1	00b (default)	65,536	2 sec	6 sec
1	01b	131,072	4 sec	12 sec
1	10b	262,144	8 sec	24 sec
1	11b	524,288	16 sec	48 sec

Bits 2 to 0: CPU Speed[2:0]. The PSoC M8C may operate over a range of CPU clock speeds (see Table 10-2), allowing the M8C's performance and power requirements to be tailored to the application.

The reset value for the CPU Speed bits is zero; therefore, the default CPU speed is one-eighth of the clock source. The Internal Main Oscillator (IMO) is the default clock source for the CPU speed circuit; therefore, the default CPU speed is 3 MHz.

The CPU frequency is changed with a write to the OSC_CR0 register. There are eight frequencies generated from a power-of-2 divide circuit, which are selected by a 3-bit code. At any given time, the CPU 8-to-1 clock mux is selecting one of the available frequencies, which is resynchronized to the 24 MHz master clock at the output.

Regardless of the CPU Speed bit's setting, if the actual CPU speed is greater than 12 MHz, the 24 MHz operating requirements apply. An example of this scenario is a device that is configured to use an external clock, which is supplying a frequency of 20 MHz. If the CPU speed register's value is 0b011, the CPU clock will be 20 MHz. Therefore, the supply voltage requirements for the device are the same as if the part was operating at 24 MHz off of the IMO. The operating voltage requirements are not relaxed until the CPU speed is at 12 MHz or less.

Table 10-2. OSC_CR0[2:0] Bits: CPU Speed

Bits	Internal Main Oscillator	External Clock
000b	3 MHz	EXTCLK/ 8
001b	6 MHz	EXTCLK/ 4
010b	12 MHz	EXTCLK/ 2
011b	24 MHz	EXTCLK/ 1
100b	1.5 MHz	EXTCLK/ 16
101b	750 kHz	EXTCLK/ 32
110b	187.5 kHz	EXTCLK/ 128
111b	93.7 kHz	EXTCLK/ 256

For additional information, refer to the OSC_CR0 register on page 296.

10.2.3 OSC_CR2 Register

Address	Name	Bit 7	Bit 6	Bit 5	Bit 4	Bit 3	Bit 2	Bit 1	Bit 0	Access
1,E2h	OSC_CR2	PLLGAIN			SLP_EXTEND	WDR32_SE	EXTCLKEN	RSVD	SYSCLKX2DIS	RW : 00

The Oscillator Control Register 2 (OSC_CR2) is used to configure various features of internal clock sources and clock nets.

Bit 7: PLLGAIN. This is the only bit in the OSC_CR2 register that directly influences the PLL. When set, this bit keeps the PLL in a Low Gain mode. If this bit is held low, the lock time is less than 10 ms. If this bit is held high, the lock time is on the order of 50 ms. After lock is achieved, it is recommended that this bit be forced high to decrease the jitter on the output. If longer lock time is tolerable, the PLLGAIN bit can be held high all the time.

Bit 4: SLP_EXTEND. This bit allows for extended sleep intervals, up to 16s.

Bit 3: WDR32_SE. If an external 32 kHz crystal is used, this bit allows a choice between the ECO or the ILO as the source of the watchdog timer and sleep timer

Bit 2: EXTCLKEN. When the EXTCLKEN bit is set, the external clock becomes the source for the internal clock tree, SYSCLK, which drives most PSoC device clocking functions. All external and internal signals, including the 32 kHz clock, whether derived from the internal low speed oscillator (ILO) or the crystal oscillator, are synchronized to this clock source. If an external clock is enabled, PLL mode should be off. The external clock input is located on port P1[4]. When using this input, the pin drive mode should be set to High-Z (not High-Z analog).

Bit 1: RSVD. Reserved bit - This bit should always be 0.

Bit 0: SYSCLKX2DIS. When set, the Internal Main Oscillator's doubler is disabled. This results in a reduction of overall device power, on the order of 1 mA. It is advised that any application that does not require this doubled clock should have it turned off.

For additional information, refer to the OSC_CR2 register on page 298.

10.2.4 ECO_TR Register

Address	Name	Bit 7	Bit 6	Bit 5	Bit 4	Bit 3	Bit 2	Bit 1	Bit 0	Access
1,EBh	ECO_TR	PSSDC[1:0]								RW : 00

The External Crystal Oscillator Trim Register (ECO_TR) sets the adjustment for the 32.768 kHz External Crystal Oscillator.

The device specific value placed in this register at boot time is based on factory testing. This register does not adjust the frequency of the external crystal oscillator.

It is strongly recommended that the user not alter the register value.

Bits 7 and 6: PSSDC[1:0]. These bits are used to set the sleep ***duty cycle***. These bits should not be altered.

For additional information, refer to the ECO_TR register on page 306.

11. Phase-Locked Loop (PLL)

This chapter presents the Phase-Locked Loop (PLL) and its associated registers. For a complete table of the PLL registers, refer to the "Summary Table of the Core Registers" on page 36. For a quick reference of all PSoC® registers in address order, refer to the Register Details chapter on page 125.

11.1 Architectural Description

A ***Phase-Locked Loop (PLL)*** function generates the system clock with crystal accuracy. It is designed to provide a 23.986 MHz oscillator, when utilized with an external 32.768 kHz crystal.

Although the PLL tracks crystal accuracy, it requires time to lock onto the reference frequency when first starting. The length of time depends on the PLLGAIN controlled by bit 7 of the OSC_CR2 register. If this bit is held low, the lock time is less than 10 ms. If this bit is held high, the lock time is on the order of 50 ms. After lock is achieved, it is recommended that this bit be forced high to decrease the ***jitter*** on the output. If longer lock time is tolerable, the PLLGAIN bit can be held high all the time.

After the 32.768 kHz External Crystal Oscillator (ECO) has been selected and enabled, the following procedure should be followed to enable the PLL and allow for proper frequency lock.

- Select a CPU frequency of 3 MHz or less.
- Enable the PLL.
- Wait between 10 and 50 ms, depending on bit 7 of the OSC_CR2 register.
- Set the CPU to a faster frequency, if desired. To do this, write the CPU Speed[2:0] bits in the OSC_CR0 register. The CPU frequency will immediately change when these bits are set.

Note If the proper settings are selected in ***PSoC Designer™***, these steps are automatically done in *boot.asm*.

11.2 Register Definitions

The following registers are associated with the Phase Locked Loop (PLL) and are listed in address order. Each register description has an associated register table showing the bit structure for that register. The bits that are grayed out in the tables below are reserved bits and are not detailed in the register descriptions. Note that reserved bits should always be written with a value of '0'. For a complete table of the PLL registers, refer to the "Summary Table of the Core Registers" on page 36.

11.2.1 OSC_CR0 Register

Address	Name	Bit 7	Bit 6	Bit 5	Bit 4	Bit 3	Bit 2	Bit 1	Bit 0	Access
1,E0h	OSC_CR0	32k Select	PLL Mode	No Buzz	Sleep[1:0]		CPU Speed[2:0]			RW : 00

The Oscillator Control Register 0 (OSC_CR0) is used to configure various features of internal clock sources and clock nets.

Bit 7: 32k Select. By default, the 32 kHz clock source is the Internal Low Speed Oscillator (ILO). Optionally, the 32.768 kHz External Crystal Oscillator (ECO) may be selected.

Bit 6: PLL Mode. This is the only bit in the OSC_CR0 register that directly influences the Phase Locked Loop (PLL). When set, this bit enables the PLL. The EXTCLKEN bit in the OSC_CR2 register should be set low during PLL operation.

Bit 5: No Buzz. Normally, when the Sleep bit is set in the CPU_SCR register, all PSoC device systems are powered down, including the bandgap reference. However, to facilitate the detection of ***POR*** and ***LVD*** events at a rate higher than the sleep interval, the bandgap circuit is powered up periodically for about 60 µs at the Sleep System Duty Cycle (set in ECO_TR), which is independent of the sleep interval and typically higher. When the No Buzz bit is set, the Sleep System Duty Cycle value is overridden and the bandgap circuit is forced to be on during sleep. This results in a faster response to an LVD or POR event (continuous detection as opposed to periodic detection), at the expense of slightly higher average sleep current.

Bits 4 and 3: Sleep[1:0]. The available sleep interval selections are shown in Table 11-1. It must be remembered that when the ILO is the selected 32 kHz clock source, sleep intervals are approximate.

Table 11-1. Sleep Interval Selections

OSC_CR2[4]	Sleep Interval OSC_CR0[4:3]	Sleep Timer Clocks	Sleep Period (nominal)	Watchdog Period (nominal)
0	00b (default)	64	1.95 ms	6 ms
0	01b	512	15.6 ms	47 ms
0	10b	4,096	125 ms	375 ms
0	11b	32,768	1 sec	3 sec
1	00b (default)	65,536	2 sec	6 sec
1	01b	131,072	4 sec	12 sec
1	10b	262,144	8 sec	24 sec
1	11b	524,288	16 sec	48 sec

Bits 2 to 0: CPU Speed[2:0]. The PSoC M8C may operate over a range of CPU clock speeds (see Table 11-2), allowing the M8C's performance and power requirements to be tailored to the application.

The reset value for the CPU Speed bits is zero; therefore, the default CPU speed is one-eighth of the clock source. The Internal Main Oscillator (IMO) is the default clock source for the CPU speed circuit; therefore, the default CPU speed is 3 MHz.

The CPU frequency is changed with a write to the OSC_CR0 register. There are eight frequencies generated from a power-of-2 divide circuit, which are selected by a 3-bit code. At any given time, the CPU 8-to-1 clock mux is selecting one of the available frequencies, which is resynchronized to the 24 MHz master clock at the output.

Regardless of the CPU Speed bit's setting, if the actual CPU speed is greater than 12 MHz, the 24 MHz operating requirements apply. An example of this scenario is a device that is configured to use an external clock, which is supplying a frequency of 20 MHz. If the CPU speed register's value is 0b011, the CPU clock will be 20 MHz. Therefore, the supply voltage requirements for the device are the same as if the part was operating at 24 MHz off of the IMO. The operating voltage requirements are not relaxed until the CPU speed is at 12 MHz or less.

Some devices support the slow IMO option, as discussed in the IMO chapter in the "Architectural Description" on page 81. This offers an option to lower both system and CPU clock speed to save power.

An automatic protection mechanism is available for systems that need to run at peak CPU clock speed but cannot guarantee a high enough supply voltage for that clock speed. See the LVDTBEN bit in the "VLT_CR Register" on page 523 for more information.

Table 11-2. OSC_CR0[2:0] Bits: CPU Speed

Bits	6 MHz Internal Main Oscillator *	24 MHz Internal Main Oscillator	External Clock
000b	750 kHz	3 MHz	EXTCLK/ 8
001b	1.5 MHz	6 MHz	EXTCLK/ 4
010b	3 MHz	12 MHz	EXTCLK/ 2
011b	6 MHz	24 MHz	EXTCLK/ 1
100b	375 kHz	1.5 MHz	EXTCLK/ 16
101b	187.5 kHz	750 kHz	EXTCLK/ 32
110b	93.7 kHz	187.5 kHz	EXTCLK/ 128
111b	46.9 kHz	93.7 kHz	EXTCLK/ 256

* For PSoC devices that support the slow IMO option, see the "Architectural Description" on page 81.

For additional information, refer to the OSC_CR0 register on page 296.

11.2.2 OSC_CR2 Register

Address	Name	Bit 7	Bit 6	Bit 5	Bit 4	Bit 3	Bit 2	Bit 1	Bit 0	Access
1,E2h	OSC_CR2	PLLGAIN			SLP_EXTEND	WDR32_SE	EXTCLKEN	RSVD	SYSCLKX2DIS	RW : 00

The Oscillator Control Register 2 (OSC_CR2) is used to configure various features of internal clock sources and clock nets.

Bit 7: PLLGAIN. This is the only bit in the OSC_CR2 register that directly influences the PLL. When set, this bit keeps the PLL in Low Gain mode.

If this bit is held low, the lock time is less than 10 ms. If this bit is held high, the lock time is on the order of 50 ms. After lock is achieved, it is recommended that this bit be forced high to decrease the jitter on the output. If longer lock time is tolerable, the PLLGAIN bit can be held high all the time.

Bit 4: SLP_EXTEND. This bit allows for extended sleep intervals, up to 16s.

Bit 3: WDR32_SE. If an external 32 kHz crystal is used, this bit allows a choice between the ECO or the ILO as the source of the watchdog timer and sleep timer

Bit 2: EXTCLKEN. When the EXTCLKEN bit is set, the external clock becomes the source for the internal clock tree, SYSCLK, which drives most PSoC device clocking functions. All external and internal signals, including the 32 kHz clock, whether derived from the Internal Low Speed Oscillator (ILO) or the crystal oscillator, are synchronized to this clock source. If an external clock is enabled, PLL mode should be off. The external clock input is located on port P1[4]. When using this input, the pin drive mode should be set to High-Z (not High-Z analog).

Bit 1: RSVD. Reserved bit - This bit should always be 0.

Bit 0: SYSCLKX2DIS. When SYSCLKX2DIS is set, the IMO's doubler is disabled. This will result in a reduction of overall device power, on the order of 1 mA. It is advised that any application that does not require this doubled clock should have it turned off. During emulation with the In-Circuit Emulator (ICE), the IMO's doubler is always active regardless of the status of SYSCLKX2DIS.

For additional information, refer to the OSC_CR2 register on page 298.

12. Sleep and Watchdog

This chapter discusses the Sleep and Watchdog operations and their associated registers. For a complete table of the Sleep and Watchdog registers, refer to the "Summary Table of the Core Registers" on page 36. For a quick reference of all PSoC® registers in address order, refer to the Register Details chapter on page 125.

12.1 Architectural Description

Device components that are involved in Sleep and Watchdog operation are the selected 32 kHz clock (external crystal or internal), the sleep timer, the Sleep bit in the CPU_SCR0 register, the sleep circuit (to sequence going into and coming out of sleep), the bandgap refresh circuit (to periodically refresh the reference voltage during sleep), and the ***watchdog timer***.

The goal of Sleep operation is to reduce average power consumption as much as possible. The system has a sleep state that can be initiated under firmware control. In this state, the CPU is stopped at an instruction boundary and the 24/48 MHz oscillator (IMO), the Flash memory module, and bandgap voltage reference are powered down. The only blocks that remain in operation are the 32 kHz oscillator (external crystal or internal), ***PSoC blocks*** clocked from the 32 kHz clock selection, and the supply voltage monitor circuit.

Analog PSoC blocks have individual power down settings that are controlled by firmware, independently of the sleep state. Continuous time analog blocks may remain in operation, because they do not require a clock source. Typically, switched capacitor analog blocks will not operate, because the internal sources of clocking for these blocks are stopped.

The system can only wake up from sleep as a result of an interrupt or reset event. The sleep timer can provide periodic interrupts to allow the system to wake up, poll peripherals, or do real-time functions, and then go to sleep again. The GPIO (pin) interrupt, supply monitor interrupt, analog column interrupts, and timers clocked externally or from the 32 kHz clock are examples of ***asynchronous*** interrupts that can also be used to wake the system up.

The Watchdog Timer (WDT) circuit is designed to assert a ***hardware reset*** to the device after a pre-programmed interval, unless it is periodically serviced in firmware. In the event that an unexpected execution path is taken through the code, this functionality serves to reboot the system. It can also restart the system from the CPU halt state.

When the WDT is enabled, it can only be disabled by an External Reset (XRES) or a Power On Reset (POR). A WDT reset will leave the WDT enabled. Therefore, if the WDT is used in an application, all code (including initialization code) must be written as though the WDT is enabled.

12.1.1 32 kHz Clock Selection

By default, the 32 kHz clock source is the Internal Low Speed Oscillator (ILO). Optionally, the 32.768 kHz External Crystal Oscillator (ECO) may be activated. This selection is made in bit 7 of the OSC_CR0 register. Selecting the ECO as the source for the 32 kHz clock allows the sleep timer and sleep interrupt to be used in real-time clock applications. Regardless of the clock source selected, the 32 kHz clock plays a key role in sleep functionality. It runs continuously and is used to sequence system wakeup. It is also used to periodically refresh the bandgap voltage during sleep.

Refer to the External Crystal Oscillator (ECO) chapter on page 87, for details on activating an external crystal oscillator.

12.1.2 Sleep Timer

The sleep timer is a 15-bit up counter clocked by the currently selected 32 kHz clock source, either the ILO or ECO. This timer is always enabled. The exception to this is within an ***ICE*** (in-circuit ***emulator***) in ***debugger*** mode and when the Stop bit in the CPU_SCR0 is set; the sleep timer is disabled, so that the user will not get continual watchdog resets when a breakpoint is hit in the debugger environment.

If the associated sleep timer interrupt is enabled, a periodic interrupt to the CPU is generated based on the sleep interval selected from the OSC_CR0 register. The sleep timer functionality does not need to be directly associated with the sleep state. It can be used as a general purpose timer interrupt regardless of sleep state.

The reset state of the sleep timer is a count value of all zeros. There are two ways to reset the sleep timer. Any hardware reset, (that is, POR, XRES, or Watchdog Reset (WDR) will reset the sleep timer. There is also a method that allows the user to reset the sleep timer in firmware. A write of 38h to the RES_WDT register clears the sleep timer.

Note Any write to the RES_WDT register also clears the watchdog timer.

Clearing the sleep timer may be done at anytime to synchronize the sleep timer operation to CPU processing. A good example of this is after POR. The CPU hold-off, due to voltage ramp and others, may be significant. In addition, a significant amount of program initialization may be required. However, the sleep timer starts counting immediately after POR and will be at an arbitrary count when user code begins execution. In this case, it may be desirable to clear the sleep timer before enabling the sleep interrupt initially, to ensure that the first sleep period is a full interval.

12.2 Application Description

The following are notes regarding sleep as it relates to firmware and application issues.

Note 1 If an interrupt is pending, enabled, and scheduled to be taken at the instruction boundary after the write to the sleep bit, the system will not go to sleep. The instruction will still execute, but it will not be able to set the SLEEP bit in the CPU_SCR0 register. Instead, the interrupt will be taken and the effect of the sleep instruction is ignored.

Note 2 The Global Interrupt Enable (CPU_F register) does not need to be enabled to wake the system out of sleep state. Individual interrupt enables, as set in the interrupt mask registers, are sufficient. If the Global Interrupt Enable is not set, the CPU will not service the ISR associated with that interrupt. However, the system will wake up and continue executing instructions from the point at which it went to sleep. In this case, the user must manually clear the pending interrupt or subsequently enable the Global Interrupt Enable bit and let the CPU take the ISR. If a pending interrupt is not cleared, it will be continuously asserted. Although the sleep bit may be written and the sleep sequence executed as soon as the device enters Sleep mode, the Sleep bit is cleared by the pending interrupt and Sleep mode is exited immediately.

Note 3 On wakeup, the instruction immediately after the sleep instruction is executed before the interrupt service routine (if enabled). The instruction after the sleep instruction is pre-fetched, before the system actually goes to sleep. Therefore, when an interrupt occurs to wake the system up, the pre-fetched instruction is executed and then the interrupt service routine is executed. (If the Global Interrupt Enable is not set, instruction execution will just continue where it left off before sleep.)

Note 4 If PLL mode is enabled, CPU frequency must be reduced to 3 MHz before going to sleep. The PLL will overshoot as it attempts to re-lock after wakeup; therefore, the CPU frequency must be relatively low. It is recommended to wait 10 ms after wakeup, before normal CPU operating frequency may be restored.

Note 5 Analog power must be turned off by firmware before going to sleep, to achieve the smallest sleep current. The system sleep state does not control the analog array. There are individual power controls for each analog block and global power controls in the reference block. These power controls must be manipulated by firmware.

Note 6 If the Global Interrupt Enable bit is disabled, it can be safely enabled just before the instruction that writes the sleep bit. It is usually undesirable to get an interrupt on the instruction boundary, just before writing the sleep bit. This means that on the return from interrupt, the sleep command will be executed, possibly bypassing any firmware preparations that must be made to go to sleep. To prevent this, disable interrupts before preparations are made. After sleep preparations, enable global interrupts and write the sleep bit with the two consecutive instructions as follows.

```
and f,~01h // disable global interrupts
// (prepare for sleep, could
// be many instructions)
or f,01h // enable global interrupts
mov reg[ffh],08h // Set the sleep bit
```

Due to the timing of the Global Interrupt Enable instruction, it is not possible for an interrupt to occur immediately after that instruction. The earliest the interrupt can occur is after the next instruction (write to the Sleep bit) has been executed. Therefore, if an interrupt is pending, the sleep instruction is executed; but as described in Note 1, the sleep instruction will be ignored. The first instruction executed after the ISR is the instruction after sleep.

12.3 Register Definitions

The following registers are associated with Sleep and Watchdog and are listed in address order. Each register description has an associated register table showing the bit structure for that register. The bits that are grayed out in the tables below are reserved bits and are not detailed in the register descriptions. Note that reserved bits should always be written with a value of '0'. For a complete table of the Sleep and Watchdog registers, refer to the "Summary Table of the Core Registers" on page 36.

12.3.1 INT_MSK0 Register

Address	Name	Bit 7	Bit 6	Bit 5	Bit 4	Bit 3	Bit 2	Bit 1	Bit 0	Access
0,E0h 4 Cols.	INT_MSK0	VC3	Sleep	GPIO	Analog 3	Analog 2	Analog 1	Analog 0	V Monitor	RW : 00
2 Cols.		VC3	Sleep	GPIO			Analog 1	Analog 0	V Monitor	

The Interrupt Mask Register 0 (INT_MSK0) is used to enable the individual sources' ability to create pending interrupts.

Depending on your PSoC device's characteristics, only certain bits are accessible to be read or written in the analog column dependent INT_MSK0 register. (Refer to the table titled "CY8C28xxx Device Characteristics" on page 24.) In the table, the analog column numbers are listed to the right in the Address column.

Bits 7 and 5 to 0. The INT_MSK0 register holds bits that are used by several different resources. For a full discussion of the INT_MSK0 register, see the Interrupt Controller chapter on page 65.

Bit 6: Sleep. This bit controls the sleep interrupt enable.

For additional information, refer to the INT_MSK0 register on page 208.

12.3.2 RES_WDT Register

Address	Name	Bit 7	Bit 6	Bit 5	Bit 4	Bit 3	Bit 2	Bit 1	Bit 0	Access
0,E3h	RES_WDT	WDSL_Clear[7:0]								W : 00

The Reset Watchdog Timer Register (RES_WDT) is used to clear the watchdog timer (a write of any value) and clear both the watchdog timer and the sleep timer (a write of 38h).

Bits 7 to 0: WDSL_Clear[7:0]. The Watchdog Timer (WDT) write-only register is designed to timeout at three rollover events of the sleep timer. Therefore, if only the WDT is cleared, the next Watchdog Reset (WDR) will occur anywhere from two to three times the current sleep interval setting. If the sleep timer is near the beginning of its count, the watchdog timeout will be closer to three times. However, if the sleep timer is very close to its ***terminal count***, the watchdog timeout will be closer to two times. To ensure a full three times timeout, both the WDT and the sleep timer may be cleared. In applications that need a real-time clock, and thus cannot reset the sleep timer when clearing the WDT, the duty cycle at which the WDT must be cleared should be no greater than two times the sleep interval.

For additional information, refer to the RES_WDT register on page 211.

12.3.3 CPU_SCR1 Register

Address	Name	Bit 7	Bit 6	Bit 5	Bit 4	Bit 3	Bit 2	Bit 1	Bit 0	Access
x,FEh	CPU_SCR1	IRESS			SLIMO	ECO EXW	ECO EX		IRAMDIS	# : 00

LEGEND
x An "x" before the comma in the address field indicates that this register can be read or written to no matter what bank is used.
Access is bit specific. Refer to the Register Details chapter on page 125 for additional information.

The System Status and Control Register 1 (CPU_SCR1) is used to convey the status and control of events related to internal resets and watchdog reset.

Bit 7: IRESS. The Internal Reset Status bit is a read only bit that may be used to determine if the booting process occurred more than once.

When this bit is set, it indicates that the SROM SWBootReset code was executed more than once. If this bit is not set, the SWBootReset was executed only once. In either case, the SWBootReset code will not allow execution from code stored in Flash until the M8C Core is in a safe operating mode with respect to supply voltage and Flash operation. There is no need for concern when this bit is set. It is provided for systems which may be sensitive to boot time, so that they can determine if the normal one-pass boot time was exceeded. For more information on the SWBootReest code see the Supervisory ROM (SROM) chapter on page 49.

Bit 4: SLIMO. When set, the Slow IMO bit allows the active power dissipation of the PSoC device to be reduced by slowing down the IMO from 24 MHz to 6 MHz. The IMO trim value must also be changed when SLIMO is set (see "Engaging Slow IMO" on page 81). When not in external clocking mode, the IMO is the source for SYSCLK; therefore, when the speed of the IMO changes, so will SYSCLK.

Bit 3: ECO EXW. The ECO Exists Written bit is used as a status bit to indicate that the ECO EX bit has been previously written to. It is read only. When this bit is a '1', this indicates that the CPU_SCR1 register has been written to and is now locked. When this bit is a '0', the register has not been written to since the last reset event.

Bit 2: ECO EX. The ECO Exists bit serves as a flag to the hardware, to indicate that an external crystal ***oscillator*** exists in the system. Just after boot, it may be written *only once* to a value of '1' (crystal exists) or '0' (crystal does not exist). If the bit is '0', a switch-over to the ECO is locked out by hardware. If the bit is '1', hardware allows the firmware to freely switch between the ECO and ILO. It should be written as early as possible after a ***Power On Reset (POR)*** or ***External Reset (XRES)*** event, where it is assumed that program execution integrity is high.

Bit 0: IRAMDIS. The Initialize RAM Disable bit is a control bit that is readable and writeable. The ***default value*** for this bit is '0', which indicates that the maximum amount of SRAM should be initialized on watchdog reset to a value of 00h. When the bit is '1', the minimum amount of SRAM is initialized after a watchdog reset. For more information on this bit, see the "SROM Function Descriptions" on page 50.

For additional information, refer to the CPU_SCR1 register on page 216.

12.3.4 CPU_SCR0 Register

Address	Name	Bit 7	Bit 6	Bit 5	Bit 4	Bit 3	Bit 2	Bit 1	Bit 0	Access
x,FFh	CPU_SCR0	GIES		WDRS	PORS	Sleep			STOP	# : XX

LEGEND
X The value for power on reset is unknown.
x An “x” before the comma in the address field indicates that this register can be read or written to no matter what bank is used.
Access is bit specific. Refer to the Register Details chapter on page 125 for additional information.

The System Status and Control Register 0 (CPU_SCR0) is used to convey the status and control of events for various functions of a PSoC device.

Bit 7: GIES. The Global Interrupt Enable Status bit is a read only status bit and its use is discouraged. The GIES bit is a legacy bit which was used to provide the ability to read the GIE bit of the CPU_F register. However, the CPU_F register is now readable. When this bit is set, it indicates that the GIE bit in the CPU_F register is also set which, in turn, indicates that the microprocessor will service interrupts.

Bit 5: WDRS. The WatchDog Reset Status bit may not be set. It is normally ‘0’ and automatically set whenever a watchdog reset occurs. The bit is readable and clearable by writing a zero to its bit position in the CPU_SCR0 register.

Bit 4: PORS. The Power On Reset Status (PORS) bit, which is the watchdog enable bit, is set automatically by a POR or External Reset (XRES). If the bit is cleared by user code, the watchdog timer is enabled. When cleared, the only way to reset the PORS bit is to go through a POR or XRES. Thus, there is no way to disable the watchdog timer, other than to go through a POR or XRES.

Bit 3: Sleep. The Sleep bit is used to enter Low Power Sleep mode when set. To wake up the system, this register bit is cleared asynchronously by any enabled interrupt. There are two special features of this register bit that ensures proper Sleep operation. First, the write to set the register bit is blocked, if an interrupt is about to be taken on that instruction boundary (immediately after the write). Second, there is a hardware interlock to ensure that, when set, the sleep bit may not be cleared by an incoming interrupt until the sleep circuit has finished performing the sleep sequence and the system-wide power down signal has been asserted. This prevents the sleep circuit from being interrupted in the middle of the process of system power down, possibly leaving the system in an indeterminate state.

Bit 0: STOP. The STOP bit is readable and writeable. When set, the PSoC M8C will stop executing code until a reset event occurs. This can be either a POR, WDR, or XRES. If an application wants to stop code execution until a reset, the preferred method is to use the HALT instruction rather than a register write to this bit.

For additional information, refer to the CPU_SCR0 register on page 217.

12.3.5 OSC_CR0 Register

Address	Name	Bit 7	Bit 6	Bit 5	Bit 4	Bit 3	Bit 2	Bit 1	Bit 0	Access
1,E0h	OSC_CR0	32k Select	PLL Mode	No Buzz	Sleep[1:0]		CPU Speed[2:0]			RW : 00

The Oscillator Control Register 0 (OSC_CR0) is used to configure various features of internal clock sources and clock nets.

Bit 7: 32k Select. By default, the 32 kHz clock source is the Internal Low Speed Oscillator (ILO). Optionally, the 32.768 kHz External Crystal Oscillator (ECO) may be selected.

Bit 6: PLL Mode. This is the only bit in the OSC_CR0 register that directly influences the Phase Locked Loop (PLL). When set, this bit enables the PLL. The EXTCLKEN bit in the OSC_CR2 register should be set low during PLL operation. For information on the PLL, refer to the Phase-Locked Loop (PLL) chapter on page 93.

Bit 5: No Buzz. Normally, when the Sleep bit is set in the CPU_SCR register, all PSoC device systems are powered down, including the bandgap reference. However, to facilitate the detection of ***POR*** and ***LVD*** events at a rate higher than the sleep interval, the bandgap circuit is powered up periodically for about 60 µs at the Sleep System Duty Cycle (set in ECO_TR), which is independent of the sleep interval and typically higher. When the No Buzz bit is set, the Sleep System Duty Cycle value is overridden and the bandgap circuit is forced to be on during sleep. This results in a faster response to an LVD or POR event (continuous detection as opposed to periodic detection), at the expense of slightly higher average sleep current.

Bits 4 and 3: Sleep[1:0]. The available sleep interval selections are shown in Table 12-1. The accuracy of the sleep intervals are dependent on the accuracy of the oscillator used.

Table 12-1. Sleep Interval Selections

OSC_CR2[4]	Sleep Interval OSC_CR0[4:3]	Sleep Timer Clocks	Sleep Period (nominal)	Watchdog Period (nominal)
0	00b (default)	64	1.95 ms	6 ms
0	01b	512	15.6 ms	47 ms
0	10b	4,096	125 ms	375 ms
0	11b	32,768	1 sec	3 sec
1	00b (default)	65,536	2 sec	6 sec
1	01b	131,072	4 sec	12 sec
1	10b	262,144	8 sec	24 sec
1	11b	524,288	16 sec	48 sec

Bits 2 to 0: CPU Speed[2:0]. The PSoC M8C may operate over a range of CPU clock speeds (see Table 12-2), allowing the M8C's performance and power requirements to be tailored to the application.

The reset value for the CPU Speed bits is zero; therefore, the default CPU speed is one-eighth of the clock source. The Internal Main Oscillator (IMO) is the default clock source for the CPU speed circuit; therefore, the default CPU speed is 3 MHz.

The CPU frequency is changed with a write to the OSC_CR0 register. There are eight frequencies generated from a power-of-2 divide circuit, which are selected by a 3-bit code. At any given time, the CPU 8-to-1 clock mux is selecting one of the available frequencies, which is resynchronized to the 24 MHz master clock at the output.

Regardless of the CPU Speed bit's setting, if the actual CPU speed is greater than 12 MHz, the 24 MHz operating requirements apply. An example of this scenario is a device that is configured to use an external clock, which is supplying a frequency of 20 MHz. If the CPU speed register's value is 011b, the CPU clock will be 20 MHz. Therefore, the supply voltage requirements for the device are the same as if the part was operating at 24 MHz off of the IMO. The operating voltage requirements are not relaxed until the CPU speed is at 12 MHz or less.

Table 12-2. OSC_CR0[2:0] Bits: CPU Speed

Bits	Internal Main Oscillator	External Clock
000b	3 MHz	EXTCLK/ 8
001b	6 MHz	EXTCLK/ 4
010b	12 MHz	EXTCLK/ 2
011b	24 MHz	EXTCLK/ 1
100b	1.5 MHz	EXTCLK/ 16
101b	750 kHz	EXTCLK/ 32
110b	187.5 kHz	EXTCLK/ 128
111b	93.7 kHz	EXTCLK/ 256

For additional information, refer to the OSC_CR0 register on page 296.

12.3.6 OSC_CR2 Register

Address	Name	Bit 7	Bit 6	Bit 5	Bit 4	Bit 3	Bit 2	Bit 1	Bit 0	Access
1,E2h	OSC_CR2	PLLGAIN			SLP_EXTEND	WDR32_SE	EXTCLKEN	RSVD	SYSCLKX2DIS	RW : 00

The Oscillator Control Register 2 (OSC_CR2) is used to configure various features of internal clock sources and clock nets.

Bit 7: PLLGAIN. This is the only bit in the OSC_CR2 register that directly influences the PLL. When set, this bit keeps the PLL in a Low Gain mode. If this bit is held low, the lock time is less than 10 ms. If this bit is held high, the lock time is on the order of 50 ms. After lock is achieved, it is recommended that this bit be forced high to decrease the jitter on the output. If longer lock time is tolerable, the PLLGAIN bit can be held high all the time.

Bit 4: SLP_EXTEND. This bit allows for extended sleep intervals, up to 16s.

Bit 3: WDR32_SE. If an external 32 kHz crystal is used, this bit allows a choice between the ECO or the ILO as the source of the watchdog timer and sleep timer

Bit 2: EXTCLKEN. When the EXTCLKEN bit is set, the external clock becomes the source for the internal clock tree, SYSCLK, which drives most PSoC device clocking functions. All external and internal signals, including the 32 kHz clock, whether derived from the internal low speed oscillator (ILO) or the crystal oscillator, are synchronized to this clock source. If an external clock is enabled, PLL mode should be off. The external clock input is located on port P1[4]. When using this input, the pin drive mode should be set to High-Z (not High-Z analog).

Bit 1: RSVD. Reserved bit - This bit should always be 0.

Bit 0: SYSCLKX2DIS. When set, the Internal Main Oscillator's doubler is disabled. This results in a reduction of overall device power, on the order of 1 mA. It is advised that any application that does not require this doubled clock should have it turned off.

For additional information, refer to the OSC_CR2 register on page 298.

12.3.7 ILO_TR Register

Address	Name	Bit 7	Bit 6	Bit 5	Bit 4	Bit 3	Bit 2	Bit 1	Bit 0	Access
1,E9h	ILO_TR			Bias Trim[1:0]		Freq Trim[3:0]				RW : 00

The Internal Low Speed Oscillator Trim Register (ILO_TR) sets the adjustment for the internal low speed oscillator.

The device specific value, placed in the trim bits of this register at boot time, is based on factory testing. ***It is strongly recommended that the user not alter the register value***.

Bits 5 and 4: Bias Trim[1:0]. These two bits are used to set the bias current in the PTAT Current Source. Bit 5 gets inverted, so that a medium bias is selected when both bits are '0'. The bias current is set according to Table 12-3.

Table 12-3. Bias Current in PTAT

Bias Current	Bias Trim [1:0]
Medium Bias	00b
Maximum Bias	01b
Minimum Bias	10b
Not needed *	11b

* About 15% higher than the minimum bias.

Bits 3 to 0: Freq Trim[3:0]. These four bits are used to trim the frequency. Bit 0 is the LSb and bit 3 is the MSb. Bit 3 gets inverted inside the register.

For additional information, refer to the ILO_TR register on page 304.

12.3.8 ECO_TR Register

Address	Name	Bit 7	Bit 6	Bit 5	Bit 4	Bit 3	Bit 2	Bit 1	Bit 0	Access
1,EBh	ECO_TR	PSSDC[1:0]								RW : 00

The External Crystal Oscillator Trim Register (ECO_TR) sets the adjustment for the 32.768 kHz external crystal oscillator.

The value placed in this register is based on factory testing. This register does not adjust the frequency of the external crystal oscillator. ***It is strongly recommended that the user not alter the register value.***

Bits 7 and 6: PSSDC[1:0]. These bits are used to set the sleep duty cycle. These bits should not be altered.

For additional information, refer to the ECO_TR register on page 306.

12.4 Timing Diagrams

12.4.1 Sleep Sequence

The Sleep bit, in the CPU_SCR0 register, is an input into the sleep logic circuit. This circuit is designed to sequence the device into and out of the hardware sleep state. The hardware sequence to put the device to sleep is shown in Figure 12-1 and is defined as follows.

1. Firmware sets the SLEEP bit in the CPU_SCR0 register. The Bus Request (BRQ) signal to the CPU is immediately asserted: This is a request by the system to halt CPU operation at an instruction boundary.
2. The CPU issues a Bus Request Acknowledge (BRA) on the following ***positive edge*** of the CPU clock.
3. The sleep logic waits for the following ***negative edge*** of the CPU clock and then asserts a system-wide Power Down (PD) signal. In Figure 12-1, the CPU is halted and the system-wide power down signal is asserted.

The system-wide PD signal controls three major circuit blocks: the Flash memory module, the Internal Main Oscillator (24/48 MHz oscillator that is also called the IMO), and the bandgap voltage reference. These circuits transition into a zero power state. The only operational circuits on the PSoC device are the ILO (or optional ECO), the bandgap refresh circuit, and the supply voltage monitor circuit. Note that the system sleep state does not apply to the analog array. Power down settings for individual analog blocks and references must be done in firmware, prior to executing the sleep instruction.

Figure 12-1. Sleep Sequence

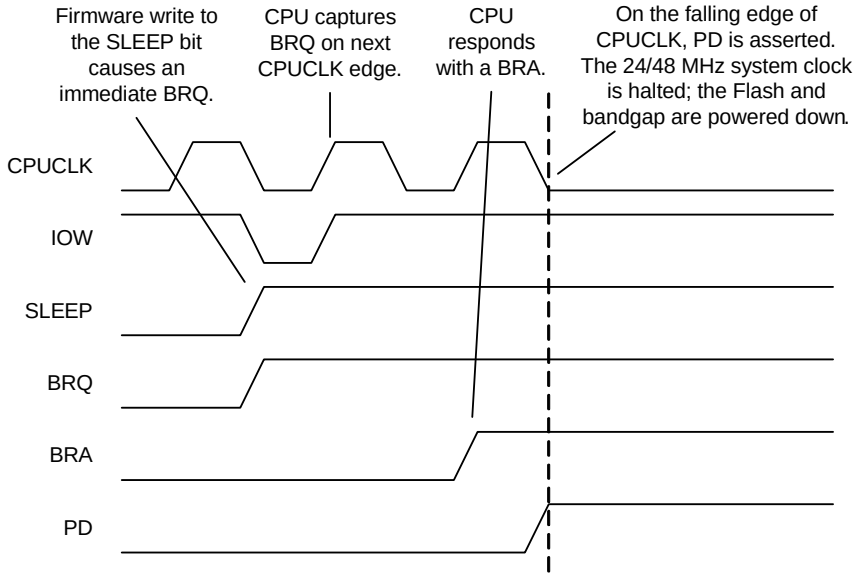

12.4.2 Wakeup Sequence

When asleep, the only event that can wake the system up is an interrupt. The Global Interrupt Enable of the CPU flag register does not need to be set. Any unmasked interrupt will wake the system up. It is optional for the CPU to actually take the interrupt after the wakeup sequence.

The wakeup sequence is synchronized to the 32 kHz clock for purposes of sequencing a startup delay, to allow the Flash memory module enough time to power up before the CPU asserts the first read access. Another reason for the delay is to allow the IMO, bandgap, and LVD/POR circuits time to settle before actually being used in the system. As shown in Figure 12-2, the wake up sequence is as follows.

1. The wakeup interrupt occurs and is synchronized by the negative edge of the 32 kHz clock.
2. At the following positive edge of the 32 kHz clock, the system-wide PD signal is negated. The Flash memory module, IMO, and bandgap any POR/LVD circuits are all powered up to a normal operating state.
3. At the next positive edge of the 32 kHz clock, the values of the bandgap are settled and sampled.
4. At the following negative edge of the 32 kHz clock (after about 15 µs, nominal). The values of the POR/LVD signals have settled and are sampled. The BRQ signal is negated by the sleep logic circuit. On the following CPU clock, BRA is negated by the CPU and instruction execution resumes.

The wakeup times (interrupt to CPU operational) will range from two to three 32 kHz cycles or 61 to 92 µs (nominal).

Figure 12-2. Wakeup Sequence

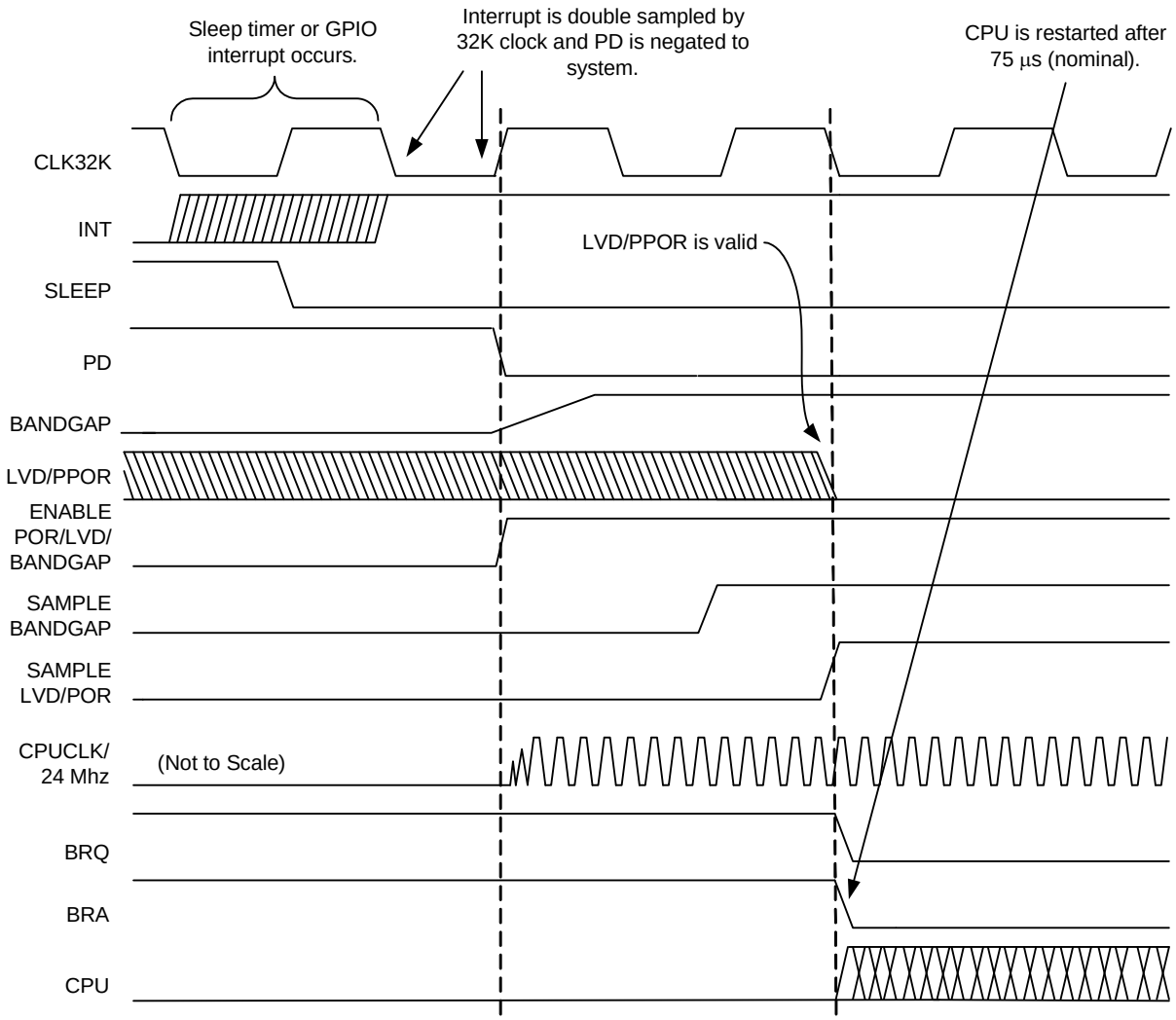

12.4.3 Bandgap Refresh

During normal operation, the bandgap circuit provides a voltage reference (VRef) to the system, for use in the analog blocks, Flash, and ***low voltage detect (LVD)*** circuitry. Normally, the bandgap output is connected directly to the VRef signal. However, during sleep, the ***bandgap reference*** generator block and LVD circuits are completely powered down. The bandgap and LVD blocks are periodically re-enabled during sleep, to monitor for low voltage conditions. This is accomplished by turning on the bandgap periodically, allowing it time to start up for a full 32 kHz clock period, and connecting it to VRef to refresh the reference voltage for the following 32 kHz clock period as shown in Figure 12-3.

During the second 32 kHz clock period of the refresh cycle, the LVD circuit is allowed to settle during the ***high time*** of the 32 kHz clock. During the low period of the second 32 kHz clock, the LVD interrupt is allowed to occur.

Figure 12-3. Bandgap Refresh Operation

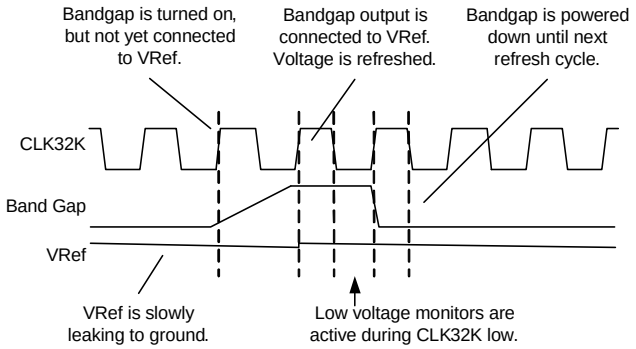

The rate at which the refresh occurs is related to the 32 kHz clock and controlled by the Power System Sleep Duty Cycle (PSSDC), bits [7:6] of the ECO_TR register). Table 12-4 enumerates the available selections. The default setting (256 sleep timer counts) is applicable for many applications, giving a typical average device current under 5 µA.

Table 12-4. Power System Sleep Duty Cycle Selections

PSSDC	Sleep Timer Counts	Period (Nominal)
00b (default)	256	8 ms
01b	1024	31.2 ms
10b	64	2 ms
11b	16	500 µs

12.4.4 Watchdog Timer

On device boot up, the Watchdog Timer (WDT) is initially disabled. The PORS bit in the system control register controls the enabling of the WDT. On boot, the PORS bit is initially set to '1', indicating that either a POR or XRES event has occurred. The WDT is enabled by clearing the PORS bit. After this bit is cleared and the watchdog timer is enabled, it cannot be subsequently disabled. (The PORS bit cannot be set to '1' in firmware; it can only be cleared.)

The only way to disable the Watchdog function, after it is enabled, is through a subsequent POR or XRES. Although the WDT is disabled during the first time through initialization code after a POR or XRES, all code should be written as if it is enabled (that is, the WDT should be cleared periodically). This is because, in the initialization code after a WDR event, the watchdog timer is enabled so all code must be aware of this.

The watchdog timer is three counts of the sleep timer interrupt output. The watchdog interval is three times the selected sleep timer interval. The available selections for the watchdog interval are shown in Table 12-1. When the sleep timer interrupt is asserted, the watchdog timer increments. When the counter reaches three, a terminal count is asserted. This terminal count is registered by the 32 kHz clock. Therefore, the WDR (Watchdog Reset) signal will go high after the following edge of the 32 kHz clock and be held asserted for one cycle (30 µs nominal). The ***flip-flop*** that registers the WDT terminal count is not reset by the WDR signal when it is asserted, but is reset by all other resets. This timing is shown in Figure 12-4.

Figure 12-4. Watchdog Reset

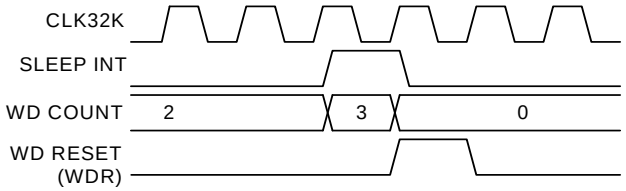

When enabled, the WDT must be periodically cleared in firmware. This is accomplished with a write to the RES_WDT register. This write is data independent, so any write will clear the watchdog timer. (Note that a write of 38h will also clear the sleep timer.) If for any reason the firmware fails to clear the WDT within the selected interval, the circuit will assert WDR to the device. WDR is equivalent in effect to any other reset. All internal registers are set to their reset state, see the table titled "Details of Functionality for Various Resets" on page 518. An important aspect to remember about WDT resets is that RAM initialization can be disabled (IRAMDIS in the CPU_SCR1 register). In this case, the SRAM contents are unaffected; so that when a WDR occurs, program variables are persistent through this reset.

In practical application, it is important to know that the watchdog timer interval can be anywhere between two and three times the sleep timer interval. The only way to guarantee that the WDT interval is a full three times that of the sleep interval is to clear the sleep timer (write 38h) when clearing the WDT register. However, this is not possible in applications that use the sleep timer as a real-time clock. In the case where firmware clears the WDT register without clearing the sleep timer, this can occur at any point in a given sleep timer interval. If it occurs just before the terminal count of a sleep timer interval, the resulting WDT interval will be just over two times that of the sleep timer interval.

12.5 Power Consumption

Sleep mode power consumption consists of the items in the following tables.

In Table 12-5, the typical block currents shown do not represent maximums. These currents do not include any analog block currents that may be on during Sleep mode.

Table 12-5. Continuous Currents

IPOR	1 µA
ICLK32K (ILO/ECO)	1 µA

While the CLK32K can be turned off in Sleep mode, this mode is not useful because it makes it impossible to restart unless an imprecise power on reset (IPOR) occurs. (The Sleep bit can not be cleared without CLK32K.) During the sleep mode buzz, the bandgap is on for two cycles and the LVD circuitry is on for one cycle. Time-averaged currents from periodic sleep mode ‘buzz’, with periodic count of N, are listed in Table 12-6.

Table 12-6. Time-Averaged Currents

IBG (Bandgap)	(2/N) * 60 µA
ILVD (LVD comparators)	(2/N) * 50 µA

Table 12-7 lists example currents for N=256 and N=1024. Device leakage currents add to the totals in the table.

Table 12-7. Example Currents

	N = 256	N = 1024
IPOR	1	1
CLK32K	1	1
IBG	0.46	0.12
ILVD	0.4	0.1
Total	2.9 µA	2.2 µA

Section C: Register Reference

The Register Reference section discusses the registers of the PSoC® device. It lists all the registers in mapping tables, in address order. For easy reference, each register is linked to the page of a detailed description located in the next chapter. This section encompasses the following chapter:

■ Register Details on page 125

Register General Conventions

The register conventions specific to this section and the Register Details chapter are listed in the following table.

Register Conventions

Convention	Description
Empty, grayed-out table cell	Illustrates a reserved bit or group of bits.
'x' before the comma in an address	Indicates the register exists in register bank 1 and register bank 2.
'x' in a register name	Indicates that there are multiple instances/address ranges of the same register.
R	Read register or bit(s)
W	Write register or bit(s)
L	Logical register or bit(s)
C	Clearable register or bit(s)
#	Access is bit specific

Register Naming Conventions

The register naming convention specific to this section for arrays of PSoC blocks and their registers is:

<Prefix>mn<Suffix>
where m = row index, n = column index

Therefore, ASD13CR3 is a register for an analog PSoC block in row 1 column 3.

Register Mapping Tables

The PSoC device has a total register address space of 512 bytes. The register space is also referred to as I/O space and is broken into two parts. The XIO bit in the Flag register (CPU_F) determines which bank the user is currently in. When the XIO bit is set, the user is said to be in the "extended" address space or the "configuration" registers.

Refer to the individual PSoC device data sheets for device-specific register mapping information.

CY8C28x03 Register Maps

Register Map Bank 0 Table: User Space

Name	Addr (0,Hex)	Access	Page	Name	Addr (0,Hex)	Access	Page	Name	Addr (0,Hex)	Access	Page	Name	Addr (0,Hex)	Access	Page
PRT0DR	00	RW	127	DBC20DR0	40	#	131		80			RDI2RI	C0	RW	179
PRT0IE	01	RW	128	DBC20DR1	41	W	132		81			RDI2SYN	C1	RW	180
PRT0GS	02	RW	129	DBC20DR2	42	RW	133		82			RDI2IS	C2	RW	181
PRT0DM2	03	RW	130	DBC20CR0	43	#	134		83			RDI2LT0	C3	RW	182
PRT1DR	04	RW	127	DBC21DR0	44	#	131		84			RDI2LT1	C4	RW	184
PRT1IE	05	RW	128	DBC21DR1	45	W	132		85			RDI2RO0	C5	RW	186
PRT1GS	06	RW	129	DBC21DR2	46	RW	133		86			RDI2RO1	C6	RW	187
PRT1DM2	07	RW	130	DBC21CR0	47	#	134		87			RDI2DSM	C7	RW	188
PRT2DR	08	RW	127	DCC22DR0	48	#	131		88				C8		
PRT2IE	09	RW	128	DCC22DR1	49	W	132		89				C9		
PRT2GS	0A	RW	129	DCC22DR2	4A	RW	133		8A				CA		
PRT2DM2	0B	RW	130	DCC22CR0	4B	#	134		8B				CB		
PRT3DR	0C	RW	127	DCC23DR0	4C	#	131		8C				CC		
PRT3IE	0D	RW	128	DCC23DR1	4D	W	132		8D				CD		
PRT3GS	0E	RW	129	DCC23DR2	4E	RW	133		8E				CE		
PRT3DM2	0F	RW	130	DCC23CR0	4F	#	134		8F				CF		
PRT4DR	10	RW	127		50				90			CUR_PP	D0	RW	189
PRT4IE	11	RW	128		51				91			STK_PP	D1	RW	190
PRT4GS	12	RW	129		52				92				D2		
PRT4DM2	13	RW	130		53				93			IDX_PP	D3	RW	191
PRT5DR	14	RW	127		54				94			MVR_PP	D4	RW	192
PRT5IE	15	RW	128		55				95			MVW_PP	D5	RW	193
PRT5GS	16	RW	129		56				96			I2C0_CFG	D6	RW	194
PRT5DM2	17	RW	130		57				97			I2C0_SCR	D7	#	195
	18				58				98			I2C0_DR	D8	RW	197
	19				59				99			I2C0_MSCR	D9	#	198
	1A				5A				9A			INT_CLR0	DA	RW	199
	1B				5B				9B			INT_CLR1	DB	RW	201
	1C				5C				9C			INT_CLR2	DC	RW	203
	1D				5D				9D			INT_CLR3	DD	RW	204
	1E				5E				9E			INT_MSK3	DE	RW	206
	1F				5F				9F			INT_MSK2	DF	RW	207
DBC00DR0	20	#	131		60				A0			INT_MSK0	E0	RW	208
DBC00DR1	21	W	132		61				A1			INT_MSK1	E1	RW	209
DBC00DR2	22	RW	133		62				A2			INT_VC	E2	RC	210
DBC00CR0	23	#	134		63				A3			RES_WDT	E3	W	211
DBC01DR0	24	#	131		64				A4			I2C1_SCR	E4	#	195
DBC01DR1	25	W	132		65				A5			I2C1_MSCR	E5	#	198
DBC01DR2	26	RW	133		66				A6				E6		
DBC01CR0	27	#	134	I2C1_DR	67	RW	197		A7				E7		
DCC02DR0	28	#	131		68			MUL1_X	A8	W	171	MUL0_X	E8	W	171
DCC02DR1	29	W	132		69			MUL1_Y	A9	W	172	MUL0_Y	E9	W	172
DCC02DR2	2A	RW	133	SADC_DH	6A	RW	153	MUL1_DH	AA	R	173	MUL0_DH	EA	R	173
DCC02CR0	2B	#	134	SADC_DL	6B	RW	154	MUL1_DL	AB	R	174	MUL0_DL	EB	R	174
DCC03DR0	2C	#	131	TMP_DR0	6C	RW	155	ACC1_DR1	AC	RW	175	ACC0_DR1	EC	RW	175
DCC03DR1	2D	W	132	TMP_DR1	6D	RW	155	ACC1_DR0	AD	RW	176	ACC0_DR0	ED	RW	176
DCC03DR2	2E	RW	133	TMP_DR2	6E	RW	155	ACC1_DR3	AE	RW	177	ACC0_DR3	EE	RW	177
DCC03CR0	2F	#	134	TMP_DR3	6F	RW	155	ACC1_DR2	AF	RW	178	ACC0_DR2	EF	RW	178
DBC10DR0	30	#	131		70			RDI0RI	B0	RW	179		F0		
DBC10DR1	31	W	132		71			RDI0SYN	B1	RW	180		F1		
DBC10DR2	32	RW	133		72			RDI0IS	B2	RW	181		F2		
DBC10CR0	33	#	134		73			RDI0LT0	B3	RW	182		F3		
DBC11DR0	34	#	131		74			RDI0LT1	B4	RW	184		F4		
DBC11DR1	35	W	132		75			RDI0RO0	B5	RW	186		F5		
DBC11DR2	36	RW	133		76			RDI0RO1	B6	RW	187		F6		
DBC11CR0	37	#	134		77			RDI0DSM	B7	RW	188	CPU_F	F7	RL	214
DCC12DR0	38	#	131		78			RDI1RI	B8	RW	179		F8		
DCC12DR1	39	W	132		79			RDI1SYN	B9	RW	180		F9		
DCC12DR2	3A	RW	133		7A			RDI1IS	BA	RW	181		FA		
DCC12CR0	3B	#	134		7B			RDI1LT0	BB	RW	182		FB		
DCC13DR0	3C	#	131		7C			RDI1LT1	BC	RW	184		FC		
DCC13DR1	3D	W	132		7D			RDI1RO0	BD	RW	186		FD		
DCC13DR2	3E	RW	133		7E			RDI1RO1	BE	RW	187	CPU_SCR1	FE	#	216
DCC13CR0	3F	#	134		7F			RDI1DSM	BF	RW	188	CPU_SCR0	FF	#	217

Gray fields are reserved. # Access is bit specific.

Register Map Bank 1 Table: Configuration Space

Name	Addr (1,Hex)	Access	Page	Name	Addr (1,Hex)	Access	Page	Name	Addr (1,Hex)	Access	Page	Name	Addr (1,Hex)	Access	Page
PRT0DM0	00	RW	218	DBC20FN	40	RW	222		80			RDI2RI	C0	RW	179
PRT0DM1	01	RW	219	DBC20IN	41	RW	224	SADC_TSCMPL	81	RW	259	RDI2SYN	C1	RW	180
PRT0IC0	02	RW	220	DBC20OU	42	RW	226	SADC_TSCMPH	82	RW	260	RDI2IS	C2	RW	181
PRT0IC1	03	RW	221	DBC20CR1	43	RW	228		83			RDI2LT0	C3	RW	182
PRT1DM0	04	RW	218	DBC21FN	44	RW	222		84			RDI2LT1	C4	RW	184
PRT1DM1	05	RW	219	DBC21IN	45	RW	224		85			RDI2RO0	C5	RW	186
PRT1IC0	06	RW	220	DBC21OU	46	RW	226		86			RDI2RO1	C6	RW	187
PRT1IC1	07	RW	221	DBC21CR1	47	RW	228		87			RDI2DSM	C7	RW	188
PRT2DM0	08	RW	218	DCC22FN	48	RW	222		88				C8		
PRT2DM1	09	RW	219	DCC22IN	49	RW	224		89				C9		
PRT2IC0	0A	RW	220	DCC22OU	4A	RW	226		8A				CA		
PRT2IC1	0B	RW	221	DCC22CR1	4B	RW	228		8B				CB		
PRT3DM0	0C	RW	218	DCC23FN	4C	RW	222		8C				CC		
PRT3DM1	0D	RW	219	DCC23IN	4D	RW	224		8D				CD		
PRT3IC0	0E	RW	220	DCC23OU	4E	RW	226		8E				CE		
PRT3IC1	0F	RW	221	DCC23CR1	4F	RW	228		8F				CF		
PRT4DM0	10	RW	218		50				90			GDI_O_IN	D0	RW	286
PRT4DM1	11	RW	219		51				91			GDI_E_IN	D1	RW	287
PRT4IC0	12	RW	220		52				92			GDI_O_OU	D2	RW	288
PRT4IC1	13	RW	221		53				93			GDI_E_OU	D3	RW	289
PRT5DM0	14	RW	218		54				94				D4		
PRT5DM1	15	RW	219		55				95				D5		
PRT5IC0	16	RW	220		56				96				D6		
PRT5IC1	17	RW	221		57				97				D7		
	18				58				98				D8		
	19				59				99				D9		
	1A				5A				9A				DA		
	1B				5B				9B				DB		
	1C				5C				9C				DC		
	1D				5D				9D			OSC_GO_EN	DD	RW	293
	1E				5E				9E			OSC_CR4	DE	RW	294
	1F				5F				9F			OSC_CR3	DF	RW	295
DBC00FN	20	RW	222		60			GDI_O_IN_CR	A0	RW	271	OSC_CR0	E0	RW	296
DBC00IN	21	RW	224		61			GDI_E_IN_CR	A1	RW	272	OSC_CR1	E1	RW	297
DBC00OU	22	RW	226		62			GDI_O_OU_CR	A2	RW	273	OSC_CR2	E2	RW	298
DBC00CR1	23	RW	228		63			GDI_E_OU_CR	A3	RW	274	VLT_CR	E3	RW	299
DBC01FN	24	RW	222		64			RTC_H	A4	RW	275	VLT_CMP	E4	R	300
DBC01IN	25	RW	224		65			RTC_M	A5	RW	276		E5		
DBC01OU	26	RW	226		66			RTC_S	A6	RW	277		E6		
DBC01CR1	27	RW	228		67			RTC_CR	A7	RW	278		E7		
DCC02FN	28	RW	222		68			SADC_CR0	A8	RW	279	IMO_TR	E8	RW	303
DCC02IN	29	RW	224		69			SADC_CR1	A9	RW	280	ILO_TR	E9	RW	304
DCC02OU	2A	RW	226		6A			SADC_CR2	AA	RW	281	BDG_TR	EA	RW	305
DCC02CR1	2B	RW	228	I2C1_CFG	6B	RW	194	SADC_CR3	AB	RW	282	ECO_TR	EB	RW	306
DCC03FN	2C	RW	222	TMP_DR0	6C	RW	155	SADC_CR4	AC	#	283		EC		
DCC03IN	2D	RW	224	TMP_DR1	6D	RW	155	I2C0_ADDR	AD	RW	284		ED		
DCC03OU	2E	RW	226	TMP_DR2	6E	RW	155	I2C1_ADDR	AE	RW	284		EE		
DCC03CR1	2F	RW	228	TMP_DR3	6F	RW	155	AMUX_CLK	AF	RW	285		EF		
DBC10FN	30	RW	222		70			RDI0RI	B0	RW	179		F0		
DBC10IN	31	RW	224	SADC_TSCR0	71	RW	247	RDI0SYN	B1	RW	180		F1		
DBC10OU	32	RW	226	SADC_TSCR1	72	RW	248	RDI0IS	B2	RW	181		F2		
DBC10CR1	33	RW	228		73			RDI0LT0	B3	RW	182		F3		
DBC11FN	34	RW	222		74			RDI0LT1	B4	RW	184		F4		
DBC11IN	35	RW	224		75			RDI0RO0	B5	RW	186		F5		
DBC11OU	36	RW	226		76			RDI0RO1	B6	RW	187		F6		
DBC11CR1	37	RW	228		77			RDI0DSM	B7	RW	188	CPU_F	F7	I	214
DCC12FN	38	RW	222		78			RDI1RI	B8	RW	179		F8		
DCC12IN	39	RW	224		79			RDI1SYN	B9	RW	180		F9		
DCC12OU	3A	RW	226		7A			RDI1IS	BA	RW	181	FLS_PR1	FA	RW	308
DCC12CR1	3B	RW	228		7B			RDI1LT0	BB	RW	182		FB		
DCC13FN	3C	RW	222		7C			RDI1LT1	BC	RW	184		FC		
DCC13IN	3D	RW	224		7D			RDI1RO0	BD	RW	186		FD		
DCC13OU	3E	RW	226		7E			RDI1RO1	BE	RW	187	CPU_SCR1	FE	#	216
DCC13CR1	3F	RW	228		7F			RDI1DSM	BF	RW	188	CPU_SCR0	FF	#	217

Gray fields are reserved. # Access is bit specific.

CY8C28x13 Register Maps

Register Map Bank 0 Table: User Space

Name	Addr (0,Hex)	Access	Page	Name	Addr (0,Hex)	Access	Page	Name	Addr (0,Hex)	Access	Page	Name	Addr (0,Hex)	Access	Page
PRT0DR	00	RW	127	DBC20DR0	40	#	131		80			RDI2RI	C0	RW	179
PRT0IE	01	RW	128	DBC20DR1	41	W	132		81			RDI2SYN	C1	RW	180
PRT0GS	02	RW	129	DBC20DR2	42	RW	133		82			RDI2IS	C2	RW	181
PRT0DM2	03	RW	130	DBC20CR0	43	#	134		83			RDI2LT0	C3	RW	182
PRT1DR	04	RW	127	DBC21DR0	44	#	131		84			RDI2LT1	C4	RW	184
PRT1IE	05	RW	128	DBC21DR1	45	W	132		85			RDI2RO0	C5	RW	186
PRT1GS	06	RW	129	DBC21DR2	46	RW	133		86			RDI2RO1	C6	RW	187
PRT1DM2	07	RW	130	DBC21CR0	47	#	134		87			RDI2DSM	C7	RW	188
PRT2DR	08	RW	127	DCC22DR0	48	#	131		88				C8		
PRT2IE	09	RW	128	DCC22DR1	49	W	132		89				C9		
PRT2GS	0A	RW	129	DCC22DR2	4A	RW	133		8A				CA		
PRT2DM2	0B	RW	130	DCC22CR0	4B	#	134		8B				CB		
PRT3DR	0C	RW	127	DCC23DR0	4C	#	131		8C				CC		
PRT3IE	0D	RW	128	DCC23DR1	4D	W	132		8D				CD		
PRT3GS	0E	RW	129	DCC23DR2	4E	RW	133		8E				CE		
PRT3DM2	0F	RW	130	DCC23CR0	4F	#	134		8F				CF		
PRT4DR	10	RW	127		50				90			CUR_PP	D0	RW	189
PRT4IE	11	RW	128		51				91			STK_PP	D1	RW	190
PRT4GS	12	RW	129		52				92				D2		
PRT4DM2	13	RW	130		53				93			IDX_PP	D3	RW	191
PRT5DR	14	RW	127		54				94			MVR_PP	D4	RW	192
PRT5IE	15	RW	128		55				95			MVW_PP	D5	RW	193
PRT5GS	16	RW	129		56				96			I2C0_CFG	D6	RW	194
PRT5DM2	17	RW	130		57				97			I2C0_SCR	D7	#	195
	18				58				98			I2C0_DR	D8	RW	197
	19				59				99			I2C0_MSCR	D9	#	198
	1A				5A				9A			INT_CLR0	DA	RW	199
	1B				5B				9B			INT_CLR1	DB	RW	201
	1C				5C				9C			INT_CLR2	DC	RW	203
	1D				5D				9D			INT_CLR3	DD	RW	204
	1E				5E				9E			INT_MSK3	DE	RW	206
	1F				5F				9F			INT_MSK2	DF	RW	207
DBC00DR0	20	#	131		60			DEC0_DH	A0	RC	169	INT_MSK0	E0	RW	208
DBC00DR1	21	W	132	AMUX_CFG	61	RW	146	DEC0_DL	A1	RC	170	INT_MSK1	E1	RW	209
DBC00DR2	22	RW	133		62			DEC1_DH	A2	RC	169	INT_VC	E2	RC	210
DBC00CR0	23	#	134		63			DEC1_DL	A3	RC	170	RES_WDT	E3	W	211
DBC01DR0	24	#	131		64				A4				E4		
DBC01DR1	25	W	132		65				A5				E5		
DBC01DR2	26	RW	133		66				A6			DEC_CR0	E6	RW	212
DBC01CR0	27	#	134		67				A7			DEC_CR1	E7	RW	213
DCC02DR0	28	#	131		68			MUL1_X	A8	W	171	MUL0_X	E8	W	171
DCC02DR1	29	W	132		69			MUL1_Y	A9	W	172	MUL0_Y	E9	W	172
DCC02DR2	2A	RW	133	SADC_DH	6A	RW	153	MUL1_DH	AA	R	173	MUL0_DH	EA	R	173
DCC02CR0	2B	#	134	SADC_DL	6B	RW	154	MUL1_DL	AB	R	174	MUL0_DL	EB	R	174
DCC03DR0	2C	#	131	TMP_DR0	6C	RW	155	ACC1_DR1	AC	RW	175	ACC0_DR1	EC	RW	175
DCC03DR1	2D	W	132	TMP_DR1	6D	RW	155	ACC1_DR0	AD	RW	176	ACC0_DR0	ED	RW	176
DCC03DR2	2E	RW	133	TMP_DR2	6E	RW	155	ACC1_DR3	AE	RW	177	ACC0_DR3	EE	RW	177
DCC03CR0	2F	#	134	TMP_DR3	6F	RW	155	ACC1_DR2	AF	RW	178	ACC0_DR2	EF	RW	178
DBC10DR0	30	#	131		70			RDI0RI	B0	RW	179		F0		
DBC10DR1	31	W	132		71			RDI0SYN	B1	RW	180		F1		
DBC10DR2	32	RW	133		72			RDI0IS	B2	RW	181		F2		
DBC10CR0	33	#	134		73			RDI0LT0	B3	RW	182		F3		
DBC11DR0	34	#	131		74			RDI0LT1	B4	RW	184		F4		
DBC11DR1	35	W	132		75			RDI0RO0	B5	RW	186		F5		
DBC11DR2	36	RW	133		76			RDI0RO1	B6	RW	187		F6		
DBC11CR0	37	#	134		77			RDI0DSM	B7	RW	188	CPU_F	F7	RL	214
DCC12DR0	38	#	131		78			RDI1RI	B8	RW	179		F8		
DCC12DR1	39	W	132		79			RDI1SYN	B9	RW	180		F9		
DCC12DR2	3A	RW	133		7A			RDI1IS	BA	RW	181		FA		
DCC12CR0	3B	#	134		7B			RDI1LT0	BB	RW	182		FB		
DCC13DR0	3C	#	131		7C			RDI1LT1	BC	RW	184	DAC1_D[0]	FC	RW	215
DCC13DR1	3D	W	132		7D			RDI1RO0	BD	RW	186	DAC0_D[1]	FD	RW	215
DCC13DR2	3E	RW	133		7E			RDI1RO1	BE	RW	187	CPU_SCR1	FE	#	216
DCC13CR0	3F	#	134		7F			RDI1DSM	BF	RW	188	CPU_SCR0	FF	#	217

Gray fields are reserved. # Access is bit specific. [0]Corresponds to right port. [1]Corresponds to left port.

Register Map Bank 1 Table: Configuration Space

Name	Addr (1,Hex)	Access	Page	Name	Addr (1,Hex)	Access	Page	Name	Addr (1,Hex)	Access	Page	Name	Addr (1,Hex)	Access	Page
PRT0DM0	00	RW	218	DBC20FN	40	RW	222		80			RDI2RI	C0	RW	179
PRT0DM1	01	RW	219	DBC20IN	41	RW	224	SADC_TSCMPL	81	RW	259	RDI2SYN	C1	RW	180
PRT0IC0	02	RW	220	DBC20OU	42	RW	226	SADC_TSCMPH	82	RW	260	RDI2IS	C2	RW	181
PRT0IC1	03	RW	221	DBC20CR1	43	RW	228	ACE_AMD_CR1	83	RW	261	RDI2LT0	C3	RW	182
PRT1DM0	04	RW	218	DBC21FN	44	RW	222		84			RDI2LT1	C4	RW	184
PRT1DM1	05	RW	219	DBC21IN	45	RW	224	ACE_PWM_CR	85	RW	262	RDI2RO0	C5	RW	186
PRT1IC0	06	RW	220	DBC21OU	46	RW	226	ACE_ADC0_CR	86	RW	263	RDI2RO1	C6	RW	187
PRT1IC1	07	RW	221	DBC21CR1	47	RW	228	ACE_ADC1_CR	87	RW	263	RDI2DSM	C7	RW	188
PRT2DM0	08	RW	218	DCC22FN	48	RW	222		88				C8		
PRT2DM1	09	RW	219	DCC22IN	49	RW	224	ACE_CLK_CR0	89	RW	264		C9		
PRT2IC0	0A	RW	220	DCC22OU	4A	RW	226	ACE_CLK_CR1	8A	RW	265		CA		
PRT2IC1	0B	RW	221	DCC22CR1	4B	RW	228	ACE_CLK_CR3	8B	RW	266		CB		
PRT3DM0	0C	RW	218	DCC23FN	4C	RW	222		8C				CC		
PRT3DM1	0D	RW	219	DCC23IN	4D	RW	224	ACE01CR1	8D	RW	256		CD		
PRT3IC0	0E	RW	220	DCC23OU	4E	RW	226	ACE01CR2	8E	RW	257		CE		
PRT3IC1	0F	RW	221	DCC23CR1	4F	RW	228	ASE11CR0	8F	RW	258		CF		
PRT4DM0	10	RW	218		50				90			GDI_O_IN	D0	RW	286
PRT4DM1	11	RW	219		51			DEC0_CR0	91	RW	267	GDI_E_IN	D1	RW	287
PRT4IC0	12	RW	220		52			DEC_CR3	92	RW	268	GDI_O_OU	D2	RW	288
PRT4IC1	13	RW	221		53				93			GDI_E_OU	D3	RW	289
PRT5DM0	14	RW	218		54				94			DEC0_ CR	D4	RW	290
PRT5DM1	15	RW	219		55			DEC1_CR0	95	RW	267	DEC1_CR	D5	RW	290
PRT5IC0	16	RW	220		56				96				D6		
PRT5IC1	17	RW	221		57				97				D7		
	18				58				98			MUX_CR0	D8	RW	291
	19				59				99			MUX_CR1	D9	RW	291
	1A				5A			DEC_CR5	9A	RW	270	MUX_CR2	DA	RW	291
	1B				5B				9B			MUX_CR3	DB	RW	291
	1C				5C				9C			IDAC_CR1	DC	RW	292
	1D				5D				9D			OSC_GO_EN	DD	RW	293
	1E				5E				9E			OSC_CR4	DE	RW	294
	1F				5F				9F			OSC_CR3	DF	RW	295
DBC00FN	20	RW	222		60			GDI_O_IN_CR	A0	RW	271	OSC_CR0	E0	RW	296
DBC00IN	21	RW	224		61			GDI_E_IN_CR	A1	RW	272	OSC_CR1	E1	RW	297
DBC00OU	22	RW	226		62			GDI_O_OU_CR	A2	RW	273	OSC_CR2	E2	RW	298
DBC00CR1	23	RW	228		63			GDI_E_OU_CR	A3	RW	274	VLT_CR	E3	RW	299
DBC01FN	24	RW	222		64			RTC_H	A4	RW	275	VLT_CMP	E4	R	300
DBC01IN	25	RW	224		65			RTC_M	A5	RW	276	ADC0_TR	E5	RW	301
DBC01OU	26	RW	226		66			RTC_S	A6	RW	277	ADC1_TR	E6	RW	301
DBC01CR1	27	RW	228		67			RTC_CR	A7	RW	278	IDAC_MODE	E7	RW	302
DCC02FN	28	RW	222		68			SADC_CR0	A8	RW	279	IMO_TR	E8	RW	303
DCC02IN	29	RW	224		69			SADC_CR1	A9	RW	280	ILO_TR	E9	RW	304
DCC02OU	2A	RW	226	AMUX_CFG1	6A	RW	246	SADC_CR2	AA	RW	281	BDG_TR	EA	RW	305
DCC02CR1	2B	RW	228		6B			SADC_CR3	AB	RW	282	ECO_TR	EB	RW	306
DCC03FN	2C	RW	222	TMP_DR0	6C	RW	155	SADC_CR4	AC	#	283	MUX_CR4	EC	RW	291
DCC03IN	2D	RW	224	TMP_DR1	6D	RW	155	I2C0_ADDR	AD	RW	284	MUX_CR5	ED	RW	291
DCC03OU	2E	RW	226	TMP_DR2	6E	RW	155		AE				EE		
DCC03CR1	2F	RW	228	TMP_DR3	6F	RW	155	AMUX_CLK	AF	RW	285		EF		
DBC10FN	30	RW	222		70			RDI0RI	B0	RW	179		F0		
DBC10IN	31	RW	224	SADC_TSCR0	71	RW	247	RDI0SYN	B1	RW	180		F1		
DBC10OU	32	RW	226	SADC_TSCR1	72	RW	248	RDI0IS	B2	RW	181		F2		
DBC10CR1	33	RW	228	ACE_AMD_CR0	73	RW	249	RDI0LT0	B3	RW	182		F3		
DBC11FN	34	RW	222		74			RDI0LT1	B4	RW	184		F4		
DBC11IN	35	RW	224	ACE_AMX_IN	75	RW	250	RDI0RO0	B5	RW	186		F5		
DBC11OU	36	RW	226	ACE_CMP_CR0	76	RW	251	RDI0RO1	B6	RW	187		F6		
DBC11CR1	37	RW	228	ACE_CMP_CR1	77	RW	252	RDI0DSM	B7	RW	188	CPU_F	F7	RL	214
DCC12FN	38	RW	222		78			RDI1RI	B8	RW	179		F8		
DCC12IN	39	RW	224	ACE_CMP_GI_EN	79	RW	253	RDI1SYN	B9	RW	180		F9		
DCC12OU	3A	RW	226	ACE_ALT_CR0	7A	RW	254	RDI1IS	BA	RW	181	FLS_PR1	FA	RW	308
DCC12CR1	3B	RW	228	ACE_ABF_CR0	7B	RW	255	RDI1LT0	BB	RW	182		FB		
DCC13FN	3C	RW	222		7C			RDI1LT1	BC	RW	184		FC		
DCC13IN	3D	RW	224	ACE00CR1	7D	RW	256	RDI1RO0	BD	RW	186	IDAC_CR0	FD	RW	309
DCC13OU	3E	RW	226	ACE00CR2	7E	RW	257	RDI1RO1	BE	RW	187	CPU_SCR1	FE	#	216
DCC13CR1	3F	RW	228	ASE10CR0	7F	RW	258	RDI1DSM	BF	RW	188	CPU_SCR0	FF	#	217

Gray fields are reserved. # Access is bit specific.

CY8C28x23 Register Maps

Register Map Bank 0 Table: User Space

Name	Addr (0,Hex)	Access	Page	Name	Addr (0,Hex)	Access	Page	Name	Addr (0,Hex)	Access	Page	Name	Addr (0,Hex)	Access	Page
PRT0DR	00	RW	127	DBC20DR0	40	#	131	ASC10CR0	80	RW	161	RDI2RI	C0	RW	179
PRT0IE	01	RW	128	DBC20DR1	41	W	132	ASC10CR1	81	RW	162	RDI2SYN	C1	RW	180
PRT0GS	02	RW	129	DBC20DR2	42	RW	133	ASC10CR2	82	RW	163	RDI2IS	C2	RW	181
PRT0DM2	03	RW	130	DBC20CR0	43	#	134	ASC10CR3	83	RW	164	RDI2LT0	C3	RW	182
PRT1DR	04	RW	127	DBC21DR0	44	#	131	ASD11CR0	84	RW	165	RDI2LT1	C4	RW	184
PRT1IE	05	RW	128	DBC21DR1	45	W	132	ASD11CR1	85	RW	166	RDI2RO0	C5	RW	186
PRT1GS	06	RW	129	DBC21DR2	46	RW	133	ASD11CR2	86	RW	167	RDI2RO1	C6	RW	187
PRT1DM2	07	RW	130	DBC21CR0	47	#	134	ASD11CR3	87	RW	168	RDI2DSM	C7	RW	188
PRT2DR	08	RW	127	DCC22DR0	48	#	131		88				C8		
PRT2IE	09	RW	128	DCC22DR1	49	W	132		89				C9		
PRT2GS	0A	RW	129	DCC22DR2	4A	RW	133		8A				CA		
PRT2DM2	0B	RW	130	DCC22CR0	4B	#	134		8B				CB		
PRT3DR	0C	RW	127	DCC23DR0	4C	#	131		8C				CC		
PRT3IE	0D	RW	128	DCC23DR1	4D	W	132		8D				CD		
PRT3GS	0E	RW	129	DCC23DR2	4E	RW	133		8E				CE		
PRT3DM2	0F	RW	130	DCC23CR0	4F	#	134		8F				CF		
PRT4DR	10	RW	127		50			ASD20CR0	90	RW	165	CUR_PP	D0	RW	189
PRT4IE	11	RW	128		51			ASD20CR1	91	RW	166	STK_PP	D1	RW	190
PRT4GS	12	RW	129		52			ASD20CR2	92	RW	167		D2		
PRT4DM2	13	RW	130		53			ASD20CR3	93	RW	168	IDX_PP	D3	RW	191
PRT5DR	14	RW	127		54			ASC21CR0	94	RW	161	MVR_PP	D4	RW	192
PRT5IE	15	RW	128		55			ASC21CR1	95	RW	162	MVW_PP	D5	RW	193
PRT5GS	16	RW	129		56			ASC21CR2	96	RW	163	I2C0_CFG	D6	RW	194
PRT5DM2	17	RW	130		57			ASC21CR3	97	RW	164	I2C0_SCR	D7	#	195
	18				58				98			I2C0_DR	D8	RW	197
	19				59				99			I2C0_MSCR	D9	#	198
	1A				5A				9A			INT_CLR0	DA	RW	199
	1B				5B				9B			INT_CLR1	DB	RW	201
	1C				5C				9C			INT_CLR2	DC	RW	203
	1D				5D				9D			INT_CLR3	DD	RW	204
	1E				5E				9E			INT_MSK3	DE	RW	206
	1F				5F				9F			INT_MSK2	DF	RW	207
DBC00DR0	20	#	131	AMX_IN	60	RW	145	DEC0_DH	A0	RC	169	INT_MSK0	E0	RW	208
DBC00DR1	21	W	132	AMUX_CFG	61	RW	146	DEC0_DL	A1	RC	170	INT_MSK1	E1	RW	209
DBC00DR2	22	RW	133	CLK_CR3	62	RW	147	DEC1_DH	A2	RC	169	INT_VC	E2	RC	210
DBC00CR0	23	#	134	ARF_CR	63	RW	148	DEC1_DL	A3	RC	170	RES_WDT	E3	W	211
DBC01DR0	24	#	131	CMP_CR0	64	#	149		A4			I2C1_SCR	E4	#	195
DBC01DR1	25	W	132	ASY_CR	65	#	150		A5			I2C1_MSCR	E5	#	198
DBC01DR2	26	RW	133	CMP_CR1	66	RW	151		A6			DEC_CR0	E6	RW	212
DBC01CR0	27	#	134	I2C1_DR	67	RW	197		A7			DEC_CR1	E7	RW	213
DCC02DR0	28	#	131		68			MUL1_X	A8	W	171	MUL0_X	E8	W	171
DCC02DR1	29	W	132		69			MUL1_Y	A9	W	172	MUL0_Y	E9	W	172
DCC02DR2	2A	RW	133		6A			MUL1_DH	AA	R	173	MUL0_DH	EA	R	173
DCC02CR0	2B	#	134		6B			MUL1_DL	AB	R	174	MUL0_DL	EB	R	174
DCC03DR0	2C	#	131	TMP_DR0	6C	RW	155	ACC1_DR1	AC	RW	175	ACC0_DR1	EC	RW	175
DCC03DR1	2D	W	132	TMP_DR1	6D	RW	155	ACC1_DR0	AD	RW	176	ACC0_DR0	ED	RW	176
DCC03DR2	2E	RW	133	TMP_DR2	6E	RW	155	ACC1_DR3	AE	RW	177	ACC0_DR3	EE	RW	177
DCC03CR0	2F	#	134	TMP_DR3	6F	RW	155	ACC1_DR2	AF	RW	178	ACC0_DR2	EF	RW	178
DBC10DR0	30	#	131	ACC00CR3	70	RW	156	RDI0RI	B0	RW	179		F0		
DBC10DR1	31	W	132	ACC00CR0	71	RW	157	RDI0SYN	B1	RW	180		F1		
DBC10DR2	32	RW	133	ACC00CR1	72	RW	159	RDI0IS	B2	RW	181		F2		
DBC10CR0	33	#	134	ACC00CR2	73	RW	160	RDI0LT0	B3	RW	182		F3		
DBC11DR0	34	#	131	ACC01CR3	74	RW	156	RDI0LT1	B4	RW	184		F4		
DBC11DR1	35	W	132	ACC01CR0	75	RW	157	RDI0RO0	B5	RW	186		F5		
DBC11DR2	36	RW	133	ACC01CR1	76	RW	159	RDI0RO1	B6	RW	187		F6		
DBC11CR0	37	#	134	ACC01CR2	77	RW	160	RDI0DSM	B7	RW	188	CPU_F	F7	I	214
DCC12DR0	38	#	131		78			RDI1RI	B8	RW	179		F8		
DCC12DR1	39	W	132		79			RDI1SYN	B9	RW	180		F9		
DCC12DR2	3A	RW	133		7A			RDI1IS	BA	RW	181		FA		
DCC12CR0	3B	#	134		7B			RDI1LT0	BB	RW	182		FB		
DCC13DR0	3C	#	131		7C			RDI1LT1	BC	RW	184		FC		
DCC13DR1	3D	W	132		7D			RDI1RO0	BD	RW	186		FD		
DCC13DR2	3E	RW	133		7E			RDI1RO1	BE	RW	187	CPU_SCR1	FE	#	216
DCC13CR0	3F	#	134		7F			RDI1DSM	BF	RW	188	CPU_SCR0	FF	#	217

Gray fields are reserved. # Access is bit specific.

Register Map Bank 1 Table: Configuration Space

Name	Addr (1,Hex)	Access	Page	Name	Addr (1,Hex)	Access	Page	Name	Addr (1,Hex)	Access	Page	Name	Addr (1,Hex)	Access	Page
PRT0DM0	00	RW	218	DBC20FN	40	RW	222		80			RDI2RI	C0	RW	179
PRT0DM1	01	RW	219	DBC20IN	41	RW	224		81			RDI2SYN	C1	RW	180
PRT0IC0	02	RW	220	DBC20OU	42	RW	226		82			RDI2IS	C2	RW	181
PRT0IC1	03	RW	221	DBC20CR1	43	RW	228		83			RDI2LT0	C3	RW	182
PRT1DM0	04	RW	218	DBC21FN	44	RW	222		84			RDI2LT1	C4	RW	184
PRT1DM1	05	RW	219	DBC21IN	45	RW	224		85			RDI2RO0	C5	RW	186
PRT1IC0	06	RW	220	DBC21OU	46	RW	226		86			RDI2RO1	C6	RW	187
PRT1IC1	07	RW	221	DBC21CR1	47	RW	228		87			RDI2DSM	C7	RW	188
PRT2DM0	08	RW	218	DCC22FN	48	RW	222		88				C8		
PRT2DM1	09	RW	219	DCC22IN	49	RW	224		89				C9		
PRT2IC0	0A	RW	220	DCC22OU	4A	RW	226		8A				CA		
PRT2IC1	0B	RW	221	DCC22CR1	4B	RW	228		8B				CB		
PRT3DM0	0C	RW	218	DCC23FN	4C	RW	222		8C				CC		
PRT3DM1	0D	RW	219	DCC23IN	4D	RW	224		8D				CD		
PRT3IC0	0E	RW	220	DCC23OU	4E	RW	226		8E				CE		
PRT3IC1	0F	RW	221	DCC23CR1	4F	RW	228		8F				CF		
PRT4DM0	10	RW	218		50				90			GDI_O_IN	D0	RW	286
PRT4DM1	11	RW	219		51			DEC0_CR0	91	RW	267	GDI_E_IN	D1	RW	287
PRT4IC0	12	RW	220		52			DEC_CR3	92	RW	268	GDI_O_OU	D2	RW	288
PRT4IC1	13	RW	221		53				93			GDI_E_OU	D3	RW	289
PRT5DM0	14	RW	218		54				94			DEC0_ CR	D4	RW	290
PRT5DM1	15	RW	219		55			DEC1_CR0	95	RW	267	DEC1_CR	D5	RW	290
PRT5IC0	16	RW	220		56				96				D6		
PRT5IC1	17	RW	221		57				97				D7		
	18				58				98				D8		
	19				59				99				D9		
	1A				5A			DEC_CR5	9A	RW	270		DA		
	1B				5B				9B				DB		
	1C				5C				9C				DC		
	1D				5D				9D			OSC_GO_EN	DD	RW	293
	1E				5E				9E			OSC_CR4	DE	RW	294
	1F				5F				9F			OSC_CR3	DF	RW	295
DBC00FN	20	RW	222	CLK_CR0	60	RW	236	GDI_O_IN_CR	A0	RW	271	OSC_CR0	E0	RW	296
DBC00IN	21	RW	224	CLK_CR1	61	RW	237	GDI_E_IN_CR	A1	RW	272	OSC_CR1	E1	RW	297
DBC00OU	22	RW	226	ABF_CR0	62	RW	238	GDI_O_OU_CR	A2	RW	273	OSC_CR2	E2	RW	298
DBC00CR1	23	RW	228	AMD_CR0	63	RW	239	GDI_E_OU_CR	A3	RW	274	VLT_CR	E3	RW	299
DBC01FN	24	RW	222	CMP_GO_EN	64	RW	240	RTC_H	A4	RW	275	VLT_CMP	E4	R	300
DBC01IN	25	RW	224		65			RTC_M	A5	RW	276		E5		
DBC01OU	26	RW	226	AMD_CR1	66	RW	242	RTC_S	A6	RW	277		E6		
DBC01CR1	27	RW	228	ALT_CR0	67	RW	243	RTC_CR	A7	RW	278		E7		
DCC02FN	28	RW	222		68				A8			IMO_TR	E8	RW	303
DCC02IN	29	RW	224	CLK_CR2	69	RW	245		A9			ILO_TR	E9	RW	304
DCC02OU	2A	RW	226		6A				AA			BDG_TR	EA	RW	305
DCC02CR1	2B	RW	228	I2C1_CFG	6B	RW	194		AB			ECO_TR	EB	RW	306
DCC03FN	2C	RW	222	TMP_DR0	6C	RW	155		AC				EC		
DCC03IN	2D	RW	224	TMP_DR1	6D	RW	155	I2C0_ADDR	AD	RW	284		ED		
DCC03OU	2E	RW	226	TMP_DR2	6E	RW	155	I2C1_ADDR	AE	RW	284		EE		
DCC03CR1	2F	RW	228	TMP_DR3	6F	RW	155	AMUX_CLK	AF	RW	285		EF		
DBC10FN	30	RW	222		70			RDI0RI	B0	RW	179		F0		
DBC10IN	31	RW	224		71			RDI0SYN	B1	RW	180		F1		
DBC10OU	32	RW	226		72			RDI0IS	B2	RW	181		F2		
DBC10CR1	33	RW	228		73			RDI0LT0	B3	RW	182		F3		
DBC11FN	34	RW	222		74			RDI0LT1	B4	RW	184		F4		
DBC11IN	35	RW	224		75			RDI0RO0	B5	RW	186		F5		
DBC11OU	36	RW	226		76			RDI0RO1	B6	RW	187		F6		
DBC11CR1	37	RW	228		77			RDI0DSM	B7	RW	188	CPU_F	F7	RL	214
DCC12FN	38	RW	222		78			RDI1RI	B8	RW	179		F8		
DCC12IN	39	RW	224		79			RDI1SYN	B9	RW	180		F9		
DCC12OU	3A	RW	226		7A			RDI1IS	BA	RW	181	FLS_PR1	FA	RW	308
DCC12CR1	3B	RW	228		7B			RDI1LT0	BB	RW	182		FB		
DCC13FN	3C	RW	222		7C			RDI1LT1	BC	RW	184		FC		
DCC13IN	3D	RW	224		7D			RDI1RO0	BD	RW	186		FD		
DCC13OU	3E	RW	226		7E			RDI1RO1	BE	RW	187	CPU_SCR1	FE	#	216
DCC13CR1	3F	RW	228		7F			RDI1DSM	BF	RW	188	CPU_SCR0	FF	#	217

Gray fields are reserved. # Access is bit specific.

CY8C28x33 Register Maps

Register Map Bank 0 Table: User Space

Name	Addr (0,Hex)	Access	Page	Name	Addr (0,Hex)	Access	Page	Name	Addr (0,Hex)	Access	Page	Name	Addr (0,Hex)	Access	Page
PRT0DR	00	RW	127	DBC20DR0	40	#	131	ASC10CR0	80	RW	161	RDI2RI	C0	RW	179
PRT0IE	01	RW	128	DBC20DR1	41	W	132	ASC10CR1	81	RW	162	RDI2SYN	C1	RW	180
PRT0GS	02	RW	129	DBC20DR2	42	RW	133	ASC10CR2	82	RW	163	RDI2IS	C2	RW	181
PRT0DM2	03	RW	130	DBC20CR0	43	#	134	ASC10CR3	83	RW	164	RDI2LT0	C3	RW	182
PRT1DR	04	RW	127	DBC21DR0	44	#	131	ASD11CR0	84	RW	165	RDI2LT1	C4	RW	184
PRT1IE	05	RW	128	DBC21DR1	45	W	132	ASD11CR1	85	RW	166	RDI2RO0	C5	RW	186
PRT1GS	06	RW	129	DBC21DR2	46	RW	133	ASD11CR2	86	RW	167	RDI2RO1	C6	RW	187
PRT1DM2	07	RW	130	DBC21CR0	47	#	134	ASD11CR3	87	RW	168	RDI2DSM	C7	RW	188
PRT2DR	08	RW	127	DCC22DR0	48	#	131		88				C8		
PRT2IE	09	RW	128	DCC22DR1	49	W	132		89				C9		
PRT2GS	0A	RW	129	DCC22DR2	4A	RW	133		8A				CA		
PRT2DM2	0B	RW	130	DCC22CR0	4B	#	134		8B				CB		
PRT3DR	0C	RW	127	DCC23DR0	4C	#	131		8C				CC		
PRT3IE	0D	RW	128	DCC23DR1	4D	W	132		8D				CD		
PRT3GS	0E	RW	129	DCC23DR2	4E	RW	133		8E				CE		
PRT3DM2	0F	RW	130	DCC23CR0	4F	#	134		8F				CF		
PRT4DR	10	RW	127		50			ASD20CR0	90	RW	165	CUR_PP	D0	RW	189
PRT4IE	11	RW	128		51			ASD20CR1	91	RW	166	STK_PP	D1	RW	190
PRT4GS	12	RW	129		52			ASD20CR2	92	RW	167		D2		
PRT4DM2	13	RW	130		53			ASD20CR3	93	RW	168	IDX_PP	D3	RW	191
PRT5DR	14	RW	127		54			ASC21CR0	94	RW	161	MVR_PP	D4	RW	192
PRT5IE	15	RW	128		55			ASC21CR1	95	RW	162	MVW_PP	D5	RW	193
PRT5GS	16	RW	129		56			ASC21CR2	96	RW	163	I2C0_CFG	D6	RW	194
PRT5DM2	17	RW	130		57			ASC21CR3	97	RW	164	I2C0_SCR	D7	#	195
	18				58				98			I2C0_DR	D8	RW	197
	19				59				99			I2C0_MSCR	D9	#	198
	1A				5A				9A			INT_CLR0	DA	RW	199
	1B				5B				9B			INT_CLR1	DB	RW	201
	1C				5C				9C			INT_CLR2	DC	RW	203
	1D				5D				9D			INT_CLR3	DD	RW	204
	1E				5E				9E			INT_MSK3	DE	RW	206
	1F				5F				9F			INT_MSK2	DF	RW	207
DBC00DR0	20	#	131	AMX_IN	60	RW	145	DEC0_DH	A0	RC	169	INT_MSK0	E0	RW	208
DBC00DR1	21	W	132	AMUX_CFG	61	RW	146	DEC0_DL	A1	RC	170	INT_MSK1	E1	RW	209
DBC00DR2	22	RW	133	CLK_CR3	62	RW	147	DEC1_DH	A2	RC	169	INT_VC	E2	RC	210
DBC00CR0	23	#	134	ARF_CR	63	RW	148	DEC1_DL	A3	RC	170	RES_WDT	E3	W	211
DBC01DR0	24	#	131	CMP_CR0	64	#	149	DEC2_DH	A4	RC	169		E4		
DBC01DR1	25	W	132	ASY_CR	65	#	150	DEC2_DL	A5	RC	170		E5		
DBC01DR2	26	RW	133	CMP_CR1	66	RW	151	DEC3_DH	A6	RC	169	DEC_CR0	E6	RW	212
DBC01CR0	27	#	134		67			DEC3_DL	A7	RC	170	DEC_CR1	E7	RW	213
DCC02DR0	28	#	131		68			MUL1_X	A8	W	171	MUL0_X	E8	W	171
DCC02DR1	29	W	132		69			MUL1_Y	A9	W	172	MUL0_Y	E9	W	172
DCC02DR2	2A	RW	133	SADC_DH	6A	RW	153	MUL1_DH	AA	R	173	MUL0_DH	EA	R	173
DCC02CR0	2B	#	134	SADC_DL	6B	RW	154	MUL1_DL	AB	R	174	MUL0_DL	EB	R	174
DCC03DR0	2C	#	131	TMP_DR0	6C	RW	155	ACC1_DR1	AC	RW	175	ACC0_DR1	EC	RW	175
DCC03DR1	2D	W	132	TMP_DR1	6D	RW	155	ACC1_DR0	AD	RW	176	ACC0_DR0	ED	RW	176
DCC03DR2	2E	RW	133	TMP_DR2	6E	RW	155	ACC1_DR3	AE	RW	177	ACC0_DR3	EE	RW	177
DCC03CR0	2F	#	134	TMP_DR3	6F	RW	155	ACC1_DR2	AF	RW	178	ACC0_DR2	EF	RW	178
DBC10DR0	30	#	131	ACC00CR3	70	RW	156	RDI0RI	B0	RW	179		F0		
DBC10DR1	31	W	132	ACC00CR0	71	RW	157	RDI0SYN	B1	RW	180		F1		
DBC10DR2	32	RW	133	ACC00CR1	72	RW	159	RDI0IS	B2	RW	181		F2		
DBC10CR0	33	#	134	ACC00CR2	73	RW	160	RDI0LT0	B3	RW	182		F3		
DBC11DR0	34	#	131	ACC01CR3	74	RW	156	RDI0LT1	B4	RW	184		F4		
DBC11DR1	35	W	132	ACC01CR0	75	RW	157	RDI0RO0	B5	RW	186		F5		
DBC11DR2	36	RW	133	ACC01CR1	76	RW	159	RDI0RO1	B6	RW	187		F6		
DBC11CR0	37	#	134	ACC01CR2	77	RW	160	RDI0DSM	B7	RW	188	CPU_F	F7	I	214
DCC12DR0	38	#	131		78			RDI1RI	B8	RW	179		F8		
DCC12DR1	39	W	132		79			RDI1SYN	B9	RW	180		F9		
DCC12DR2	3A	RW	133		7A			RDI1IS	BA	RW	181		FA		
DCC12CR0	3B	#	134		7B			RDI1LT0	BB	RW	182		FB		
DCC13DR0	3C	#	131		7C			RDI1LT1	BC	RW	184	DAC1_D[0]	FC	RW	215
DCC13DR1	3D	W	132		7D			RDI1RO0	BD	RW	186	DAC0_D[1]	FD	RW	215
DCC13DR2	3E	RW	133		7E			RDI1RO1	BE	RW	187	CPU_SCR1	FE	#	216
DCC13CR0	3F	#	134		7F			RDI1DSM	BF	RW	188	CPU_SCR0	FF	#	217

Gray fields are reserved. # Access is bit specific. [0]Corresponds to right port. [1]Corresponds to left port.

Register Map Bank 1 Table: Configuration Space

Name	Addr (1,Hex)	Access	Page	Name	Addr (1,Hex)	Access	Page	Name	Addr (1,Hex)	Access	Page	Name	Addr (1,Hex)	Access	Page
PRT0DM0	00	RW	218	DBC20FN	40	RW	222		80			RDI2RI	C0	RW	179
PRT0DM1	01	RW	219	DBC20IN	41	RW	224	SADC_TSCMPL	81	RW	259	RDI2SYN	C1	RW	180
PRT0IC0	02	RW	220	DBC20OU	42	RW	226	SADC_TSCMPH	82	RW	260	RDI2IS	C2	RW	181
PRT0IC1	03	RW	221	DBC20CR1	43	RW	228	ACE_AMD_CR1	83	RW	261	RDI2LT0	C3	RW	182
PRT1DM0	04	RW	218	DBC21FN	44	RW	222		84			RDI2LT1	C4	RW	184
PRT1DM1	05	RW	219	DBC21IN	45	RW	224	ACE_PWM_CR	85	RW	262	RDI2RO0	C5	RW	186
PRT1IC0	06	RW	220	DBC21OU	46	RW	226	ACE_ADC0_CR	86	RW	263	RDI2RO1	C6	RW	187
PRT1IC1	07	RW	221	DBC21CR1	47	RW	228	ACE_ADC1_CR	87	RW	263	RDI2DSM	C7	RW	188
PRT2DM0	08	RW	218	DCC22FN	48	RW	222		88				C8		
PRT2DM1	09	RW	219	DCC22IN	49	RW	224	ACE_CLK_CR0	89	RW	264		C9		
PRT2IC0	0A	RW	220	DCC22OU	4A	RW	226	ACE_CLK_CR1	8A	RW	265		CA		
PRT2IC1	0B	RW	221	DCC22CR1	4B	RW	228	ACE_CLK_CR3	8B	RW	266		CB		
PRT3DM0	0C	RW	218	DCC23FN	4C	RW	222		8C				CC		
PRT3DM1	0D	RW	219	DCC23IN	4D	RW	224	ACE01CR1	8D	RW	256		CD		
PRT3IC0	0E	RW	220	DCC23OU	4E	RW	226	ACE01CR2	8E	RW	257		CE		
PRT3IC1	0F	RW	221	DCC23CR1	4F	RW	228	ASE11CR0	8F	RW	258		CF		
PRT4DM0	10	RW	218		50				90			GDI_O_IN	D0	RW	286
PRT4DM1	11	RW	219		51			DEC0_CR0	91	RW	267	GDI_E_IN	D1	RW	287
PRT4IC0	12	RW	220		52			DEC_CR3	92	RW	268	GDI_O_OU	D2	RW	288
PRT4IC1	13	RW	221		53				93			GDI_E_OU	D3	RW	289
PRT5DM0	14	RW	218		54				94			DEC0_ CR	D4	RW	290
PRT5DM1	15	RW	219		55			DEC1_CR0	95	RW	267	DEC1_CR	D5	RW	290
PRT5IC0	16	RW	220		56			DEC_CR4	96	RW	269	DEC2 CR	D6	RW	290
PRT5IC1	17	RW	221		57				97			DEC3_CR	D7	RW	290
	18				58				98			MUX_CR0	D8	RW	291
	19				59			DEC2_CR0	99	RW	267	MUX_CR1	D9	RW	291
	1A				5A			DEC_CR5	9A	RW	270	MUX_CR2	DA	RW	291
	1B				5B				9B			MUX_CR3	DB	RW	291
	1C				5C				9C			IDAC_CR1	DC	RW	292
	1D				5D			DEC3_CR0	9D	RW	267	OSC_GO_EN	DD	RW	293
	1E				5E				9E			OSC_CR4	DE	RW	294
	1F				5F				9F			OSC_CR3	DF	RW	295
DBC00FN	20	RW	222	CLK_CR0	60	RW	236	GDI_O_IN_CR	A0	RW	271	OSC_CR0	E0	RW	296
DBC00IN	21	RW	224	CLK_CR1	61	RW	237	GDI_E_IN_CR	A1	RW	272	OSC_CR1	E1	RW	297
DBC00OU	22	RW	226	ABF_CR0	62	RW	238	GDI_O_OU_CR	A2	RW	273	OSC_CR2	E2	RW	298
DBC00CR1	23	RW	228	AMD_CR0	63	RW	239	GDI_E_OU_CR	A3	RW	274	VLT_CR	E3	RW	299
DBC01FN	24	RW	222	CMP_GO_EN	64	RW	240	RTC_H	A4	RW	275	VLT_CMP	E4	R	300
DBC01IN	25	RW	224		65			RTC_M	A5	RW	276	ADC0_TR	E5	RW	301
DBC01OU	26	RW	226	AMD_CR1	66	RW	242	RTC_S	A6	RW	277	ADC1_TR	E6	RW	301
DBC01CR1	27	RW	228	ALT_CR0	67	RW	243	RTC_CR	A7	RW	278	IDAC_MODE	E7	RW	302
DCC02FN	28	RW	222		68			SADC_CR0	A8	RW	279	IMO_TR	E8	RW	303
DCC02IN	29	RW	224	CLK_CR2	69	RW	245	SADC_CR1	A9	RW	280	ILO_TR	E9	RW	304
DCC02OU	2A	RW	226	AMUX_CFG1	6A	RW	246	SADC_CR2	AA	RW	281	BDG_TR	EA	RW	305
DCC02CR1	2B	RW	228		6B			SADC_CR3	AB	RW	282	ECO_TR	EB	RW	306
DCC03FN	2C	RW	222	TMP_DR0	6C	RW	155	SADC_CR4	AC	#	283	MUX_CR4	EC	RW	291
DCC03IN	2D	RW	224	TMP_DR1	6D	RW	155	I2C0_ADDR	AD	RW	284	MUX_CR5	ED	RW	291
DCC03OU	2E	RW	226	TMP_DR2	6E	RW	155		AE				EE		
DCC03CR1	2F	RW	228	TMP_DR3	6F	RW	155	AMUX_CLK	AF	RW	285		EF		
DBC10FN	30	RW	222		70			RDI0RI	B0	RW	179		F0		
DBC10IN	31	RW	224	SADC_TSCR0	71	RW	247	RDI0SYN	B1	RW	180		F1		
DBC10OU	32	RW	226	SADC_TSCR1	72	RW	248	RDI0IS	B2	RW	181		F2		
DBC10CR1	33	RW	228	ACE_AMD_CR0	73	RW	249	RDI0LT0	B3	RW	182		F3		
DBC11FN	34	RW	222		74			RDI0LT1	B4	RW	184		F4		
DBC11IN	35	RW	224	ACE_AMX_IN	75	RW	250	RDI0RO0	B5	RW	186		F5		
DBC11OU	36	RW	226	ACE_CMP_CR0	76	RW	251	RDI0RO1	B6	RW	187		F6		
DBC11CR1	37	RW	228	ACE_CMP_CR1	77	RW	252	RDI0DSM	B7	RW	188	CPU_F	F7	RL	214
DCC12FN	38	RW	222		78			RDI1RI	B8	RW	179		F8		
DCC12IN	39	RW	224	ACE_CMP_GI_EN	79	RW	253	RDI1SYN	B9	RW	180		F9		
DCC12OU	3A	RW	226	ACE_ALT_CR0	7A	RW	254	RDI1IS	BA	RW	181	FLS_PR1	FA	RW	308
DCC12CR1	3B	RW	228	ACE_ABF_CR0	7B	RW	255	RDI1LT0	BB	RW	182		FB		
DCC13FN	3C	RW	222		7C			RDI1LT1	BC	RW	184		FC		
DCC13IN	3D	RW	224	ACE00CR1	7D	RW	256	RDI1RO0	BD	RW	186	IDAC_CR0	FD	RW	309
DCC13OU	3E	RW	226	ACE00CR2	7E	RW	257	RDI1RO1	BE	RW	187	CPU_SCR1	FE	#	216
DCC13CR1	3F	RW	228	ASE10CR0	7F	RW	258	RDI1DSM	BF	RW	188	CPU_SCR0	FF	#	217

Gray fields are reserved. # Access is bit specific.

CY8C28x43 Register Maps

Register Map Bank 0 Table: User Space

Name	Addr (0,Hex)	Access	Page	Name	Addr (0,Hex)	Access	Page	Name	Addr (0,Hex)	Access	Page	Name	Addr (0,Hex)	Access	Page
PRT0DR	00	RW	127	DBC20DR0	40	#	131	ASC10CR0	80	RW	161	RDI2RI	C0	RW	179
PRT0IE	01	RW	128	DBC20DR1	41	W	132	ASC10CR1	81	RW	162	RDI2SYN	C1	RW	180
PRT0GS	02	RW	129	DBC20DR2	42	RW	133	ASC10CR2	82	RW	163	RDI2IS	C2	RW	181
PRT0DM2	03	RW	130	DBC20CR0	43	#	134	ASC10CR3	83	RW	164	RDI2LT0	C3	RW	182
PRT1DR	04	RW	127	DBC21DR0	44	#	131	ASD11CR0	84	RW	165	RDI2LT1	C4	RW	184
PRT1IE	05	RW	128	DBC21DR1	45	W	132	ASD11CR1	85	RW	166	RDI2RO0	C5	RW	186
PRT1GS	06	RW	129	DBC21DR2	46	RW	133	ASD11CR2	86	RW	167	RDI2RO1	C6	RW	187
PRT1DM2	07	RW	130	DBC21CR0	47	#	134	ASD11CR3	87	RW	168	RDI2DSM	C7	RW	188
PRT2DR	08	RW	127	DCC22DR0	48	#	131	ASC12CR0	88	RW	161		C8		
PRT2IE	09	RW	128	DCC22DR1	49	W	132	ASC12CR1	89	RW	162		C9		
PRT2GS	0A	RW	129	DCC22DR2	4A	RW	133	ASC12CR2	8A	RW	163		CA		
PRT2DM2	0B	RW	130	DCC22CR0	4B	#	134	ASC12CR3	8B	RW	164		CB		
PRT3DR	0C	RW	127	DCC23DR0	4C	#	131	ASD13CR0	8C	RW	165		CC		
PRT3IE	0D	RW	128	DCC23DR1	4D	W	132	ASD13CR1	8D	RW	166		CD		
PRT3GS	0E	RW	129	DCC23DR2	4E	RW	133	ASD13CR2	8E	RW	167		CE		
PRT3DM2	0F	RW	130	DCC23CR0	4F	#	134	ASD13CR3	8F	RW	168		CF		
PRT4DR	10	RW	127		50			ASD20CR0	90	RW	165	CUR_PP	D0	RW	189
PRT4IE	11	RW	128		51			ASD20CR1	91	RW	166	STK_PP	D1	RW	190
PRT4GS	12	RW	129		52			ASD20CR2	92	RW	167		D2		
PRT4DM2	13	RW	130		53			ASD20CR3	93	RW	168	IDX_PP	D3	RW	191
PRT5DR	14	RW	127		54			ASC21CR0	94	RW	161	MVR_PP	D4	RW	192
PRT5IE	15	RW	128		55			ASC21CR1	95	RW	162	MVW_PP	D5	RW	193
PRT5GS	16	RW	129		56			ASC21CR2	96	RW	163	I2C0_CFG	D6	RW	194
PRT5DM2	17	RW	130		57			ASC21CR3	97	RW	164	I2C0_SCR	D7	#	195
	18				58			ASD22CR0	98	RW	165	I2C0_DR	D8	RW	197
	19				59			ASD22CR1	99	RW	166	I2C0_MSCR	D9	#	198
	1A				5A			ASD22CR2	9A	RW	167	INT_CLR0	DA	RW	199
	1B				5B			ASD22CR3	9B	RW	168	INT_CLR1	DB	RW	201
	1C				5C			ASC23CR0	9C	RW	161	INT_CLR2	DC	RW	203
	1D				5D			ASC23CR1	9D	RW	162	INT_CLR3	DD	RW	204
	1E				5E			ASC23CR2	9E	RW	163	INT_MSK3	DE	RW	206
	1F				5F			ASC23CR3	9F	RW	164	INT_MSK2	DF	RW	207
DBC00DR0	20	#	131	AMX_IN	60	RW	145	DEC0_DH	A0	RC	169	INT_MSK0	E0	RW	208
DBC00DR1	21	W	132	AMUX_CFG	61	RW	146	DEC0_DL	A1	RC	170	INT_MSK1	E1	RW	209
DBC00DR2	22	RW	133	CLK_CR3	62	RW	147	DEC1_DH	A2	RC	169	INT_VC	E2	RC	210
DBC00CR0	23	#	134	ARF_CR	63	RW	148	DEC1_DL	A3	RC	170	RES_WDT	E3	W	211
DBC01DR0	24	#	131	CMP_CR0	64	#	149	DEC2_DH	A4	RC	169	I2C1_SCR	E4	#	195
DBC01DR1	25	W	132	ASY_CR	65	#	150	DEC2_DL	A5	RC	170	I2C1_MSCR	E5	#	198
DBC01DR2	26	RW	133	CMP_CR1	66	RW	151	DEC3_DH	A6	RC	169	DEC_CR0	E6	RW	212
DBC01CR0	27	#	134	I2C1_DR	67	RW	197	DEC3_DL	A7	RC	170	DEC_CR1	E7	RW	213
DCC02DR0	28	#	131		68			MUL1_X	A8	W	171	MUL0_X	E8	W	171
DCC02DR1	29	W	132		69			MUL1_Y	A9	W	172	MUL0_Y	E9	W	172
DCC02DR2	2A	RW	133	SADC_DH	6A	RW	153	MUL1_DH	AA	R	173	MUL0_DH	EA	R	173
DCC02CR0	2B	#	134	SADC_DL	6B	RW	154	MUL1_DL	AB	R	174	MUL0_DL	EB	R	174
DCC03DR0	2C	#	131	TMP_DR0	6C	RW	155	ACC1_DR1	AC	RW	175	ACC0_DR1	EC	RW	175
DCC03DR1	2D	W	132	TMP_DR1	6D	RW	155	ACC1_DR0	AD	RW	176	ACC0_DR0	ED	RW	176
DCC03DR2	2E	RW	133	TMP_DR2	6E	RW	155	ACC1_DR3	AE	RW	177	ACC0_DR3	EE	RW	177
DCC03CR0	2F	#	134	TMP_DR3	6F	RW	155	ACC1_DR2	AF	RW	178	ACC0_DR2	EF	RW	178
DBC10DR0	30	#	131	ACC00CR3	70	RW	156	RDI0RI	B0	RW	179		F0		
DBC10DR1	31	W	132	ACC00CR0	71	RW	157	RDI0SYN	B1	RW	180		F1		
DBC10DR2	32	RW	133	ACC00CR1	72	RW	159	RDI0IS	B2	RW	181		F2		
DBC10CR0	33	#	134	ACC00CR2	73	RW	160	RDI0LT0	B3	RW	182		F3		
DBC11DR0	34	#	131	ACC01CR3	74	RW	156	RDI0LT1	B4	RW	184		F4		
DBC11DR1	35	W	132	ACC01CR0	75	RW	157	RDI0RO0	B5	RW	186		F5		
DBC11DR2	36	RW	133	ACC01CR1	76	RW	159	RDI0RO1	B6	RW	187		F6		
DBC11CR0	37	#	134	ACC01CR2	77	RW	160	RDI0DSM	B7	RW	188	CPU_F	F7	I	214
DCC12DR0	38	#	131	ACC02CR3	78	RW	156	RDI1RI	B8	RW	179		F8		
DCC12DR1	39	W	132	ACC02CR0	79	RW	157	RDI1SYN	B9	RW	180		F9		
DCC12DR2	3A	RW	133	ACC02CR1	7A	RW	159	RDI1IS	BA	RW	181		FA		
DCC12CR0	3B	#	134	ACC02CR2	7B	RW	160	RDI1LT0	BB	RW	182		FB		
DCC13DR0	3C	#	131	ACC03CR3	7C	RW	156	RDI1LT1	BC	RW	184		FC		
DCC13DR1	3D	W	132	ACC03CR0	7D	RW	157	RDI1RO0	BD	RW	186		FD		
DCC13DR2	3E	RW	133	ACC03CR1	7E	RW	159	RDI1RO1	BE	RW	187	CPU_SCR1	FE	#	216
DCC13CR0	3F	#	134	ACC03CR2	7F	RW	160	RDI1DSM	BF	RW	188	CPU_SCR0	FF	#	217

Gray fields are reserved. # Access is bit specific.

Register Map Bank 1 Table: Configuration Space

Name	Addr (1,Hex)	Access	Page	Name	Addr (1,Hex)	Access	Page	Name	Addr (1,Hex)	Access	Page	Name	Addr (1,Hex)	Access	Page
PRT0DM0	00	RW	218	DBC20FN	40	RW	222		80			RDI2RI	C0	RW	179
PRT0DM1	01	RW	219	DBC20IN	41	RW	224	SADC_TSCMPL	81	RW	259	RDI2SYN	C1	RW	180
PRT0IC0	02	RW	220	DBC20OU	42	RW	226	SADC_TSCMPH	82	RW	260	RDI2IS	C2	RW	181
PRT0IC1	03	RW	221	DBC20CR1	43	RW	228		83			RDI2LT0	C3	RW	182
PRT1DM0	04	RW	218	DBC21FN	44	RW	222		84			RDI2LT1	C4	RW	184
PRT1DM1	05	RW	219	DBC21IN	45	RW	224		85			RDI2RO0	C5	RW	186
PRT1IC0	06	RW	220	DBC21OU	46	RW	226		86			RDI2RO1	C6	RW	187
PRT1IC1	07	RW	221	DBC21CR1	47	RW	228		87			RDI2DSM	C7	RW	188
PRT2DM0	08	RW	218	DCC22FN	48	RW	222		88				C8		
PRT2DM1	09	RW	219	DCC22IN	49	RW	224		89				C9		
PRT2IC0	0A	RW	220	DCC22OU	4A	RW	226		8A				CA		
PRT2IC1	0B	RW	221	DCC22CR1	4B	RW	228		8B				CB		
PRT3DM0	0C	RW	218	DCC23FN	4C	RW	222		8C				CC		
PRT3DM1	0D	RW	219	DCC23IN	4D	RW	224		8D				CD		
PRT3IC0	0E	RW	220	DCC23OU	4E	RW	226		8E				CE		
PRT3IC1	0F	RW	221	DCC23CR1	4F	RW	228		8F				CF		
PRT4DM0	10	RW	218		50				90			GDI_O_IN	D0	RW	286
PRT4DM1	11	RW	219		51			DEC0_CR0	91	RW	267	GDI_E_IN	D1	RW	287
PRT4IC0	12	RW	220		52			DEC_CR3	92	RW	268	GDI_O_OU	D2	RW	288
PRT4IC1	13	RW	221		53				93			GDI_E_OU	D3	RW	289
PRT5DM0	14	RW	218		54				94			DEC0_ CR	D4	RW	290
PRT5DM1	15	RW	219		55			DEC1_CR0	95	RW	267	DEC1_CR	D5	RW	290
PRT5IC0	16	RW	220		56			DEC_CR4	96	RW	269	DEC2 CR	D6	RW	290
PRT5IC1	17	RW	221		57				97			DEC3_CR	D7	RW	290
	18				58				98			MUX_CR0	D8	RW	291
	19				59			DEC2_CR0	99	RW	267	MUX_CR1	D9	RW	291
	1A				5A			DEC_CR5	9A	RW	270	MUX_CR2	DA	RW	291
	1B				5B				9B			MUX_CR3	DB	RW	291
	1C				5C				9C				DC		
	1D				5D			DEC3_CR0	9D	RW	267	OSC_GO_EN	DD	RW	293
	1E				5E				9E			OSC_CR4	DE	RW	294
	1F				5F				9F			OSC_CR3	DF	RW	295
DBC00FN	20	RW	222	CLK_CR0	60	RW	236	GDI_O_IN_CR	A0	RW	271	OSC_CR0	E0	RW	296
DBC00IN	21	RW	224	CLK_CR1	61	RW	237	GDI_E_IN_CR	A1	RW	272	OSC_CR1	E1	RW	297
DBC00OU	22	RW	226	ABF_CR0	62	RW	238	GDI_O_OU_CR	A2	RW	273	OSC_CR2	E2	RW	298
DBC00CR1	23	RW	228	AMD_CR0	63	RW	239	GDI_E_OU_CR	A3	RW	274	VLT_CR	E3	RW	299
DBC01FN	24	RW	222	CMP_GO_EN	64	RW	240	RTC_H	A4	RW	275	VLT_CMP	E4	R	300
DBC01IN	25	RW	224	CMP_GO_EN1	65	RW	241	RTC_M	A5	RW	276		E5		
DBC01OU	26	RW	226	AMD_CR1	66	RW	242	RTC_S	A6	RW	277		E6		
DBC01CR1	27	RW	228	ALT_CR0	67	RW	243	RTC_CR	A7	RW	278		E7		
DCC02FN	28	RW	222	ALT_CR1	68	RW	244	SADC_CR0	A8	RW	279	IMO_TR	E8	RW	303
DCC02IN	29	RW	224	CLK_CR2	69	RW	245	SADC_CR1	A9	RW	280	ILO_TR	E9	RW	304
DCC02OU	2A	RW	226	AMUX_CFG1	6A	RW	246	SADC_CR2	AA	RW	281	BDG_TR	EA	RW	305
DCC02CR1	2B	RW	228	I2C1_CFG	6B	RW	194	SADC_CR3	AB	RW	282	ECO_TR	EB	RW	306
DCC03FN	2C	RW	222	TMP_DR0	6C	RW	155	SADC_CR4	AC	#	283	MUX_CR4	EC	RW	291
DCC03IN	2D	RW	224	TMP_DR1	6D	RW	155	I2C0_ADDR	AD	RW	284	MUX_CR5	ED	RW	291
DCC03OU	2E	RW	226	TMP_DR2	6E	RW	155	I2C1_ADDR	AE	RW	284		EE		
DCC03CR1	2F	RW	228	TMP_DR3	6F	RW	155	AMUX_CLK	AF	RW	285		EF		
DBC10FN	30	RW	222		70			RDI0RI	B0	RW	179		F0		
DBC10IN	31	RW	224	SADC_TSCR0	71	RW	247	RDI0SYN	B1	RW	180		F1		
DBC10OU	32	RW	226	SADC_TSCR1	72	RW	248	RDI0IS	B2	RW	181		F2		
DBC10CR1	33	RW	228		73			RDI0LT0	B3	RW	182		F3		
DBC11FN	34	RW	222		74			RDI0LT1	B4	RW	184		F4		
DBC11IN	35	RW	224		75			RDI0RO0	B5	RW	186		F5		
DBC11OU	36	RW	226		76			RDI0RO1	B6	RW	187		F6		
DBC11CR1	37	RW	228		77			RDI0DSM	B7	RW	188	CPU_F	F7	RL	214
DCC12FN	38	RW	222		78			RDI1RI	B8	RW	179		F8		
DCC12IN	39	RW	224		79			RDI1SYN	B9	RW	180		F9		
DCC12OU	3A	RW	226		7A			RDI1IS	BA	RW	181	FLS_PR1	FA	RW	308
DCC12CR1	3B	RW	228		7B			RDI1LT0	BB	RW	182		FB		
DCC13FN	3C	RW	222		7C			RDI1LT1	BC	RW	184		FC		
DCC13IN	3D	RW	224		7D			RDI1RO0	BD	RW	186		FD		
DCC13OU	3E	RW	226		7E			RDI1RO1	BE	RW	187	CPU_SCR1	FE	#	216
DCC13CR1	3F	RW	228		7F			RDI1DSM	BF	RW	188	CPU_SCR0	FF	#	217

Gray fields are reserved. # Access is bit specific.

CY8C28x45 Register Maps

Register Map Bank 0 Table: User Space

Name	Addr (0,Hex)	Access	Page	Name	Addr (0,Hex)	Access	Page	Name	Addr (0,Hex)	Access	Page	Name	Addr (0,Hex)	Access	Page
PRT0DR	00	RW	127	DBC20DR0	40	#	131	ASC10CR0	80	RW	161	RDI2RI	C0	RW	179
PRT0IE	01	RW	128	DBC20DR1	41	W	132	ASC10CR1	81	RW	162	RDI2SYN	C1	RW	180
PRT0GS	02	RW	129	DBC20DR2	42	RW	133	ASC10CR2	82	RW	163	RDI2IS	C2	RW	181
PRT0DM2	03	RW	130	DBC20CR0	43	#	134	ASC10CR3	83	RW	164	RDI2LT0	C3	RW	182
PRT1DR	04	RW	127	DBC21DR0	44	#	131	ASD11CR0	84	RW	165	RDI2LT1	C4	RW	184
PRT1IE	05	RW	128	DBC21DR1	45	W	132	ASD11CR1	85	RW	166	RDI2RO0	C5	RW	186
PRT1GS	06	RW	129	DBC21DR2	46	RW	133	ASD11CR2	86	RW	167	RDI2RO1	C6	RW	187
PRT1DM2	07	RW	130	DBC21CR0	47	#	134	ASD11CR3	87	RW	168	RDI2DSM	C7	RW	188
PRT2DR	08	RW	127	DCC22DR0	48	#	131	ASC12CR0	88	RW	161		C8		
PRT2IE	09	RW	128	DCC22DR1	49	W	132	ASC12CR1	89	RW	162		C9		
PRT2GS	0A	RW	129	DCC22DR2	4A	RW	133	ASC12CR2	8A	RW	163		CA		
PRT2DM2	0B	RW	130	DCC22CR0	4B	#	134	ASC12CR3	8B	RW	164		CB		
PRT3DR	0C	RW	127	DCC23DR0	4C	#	131	ASD13CR0	8C	RW	165		CC		
PRT3IE	0D	RW	128	DCC23DR1	4D	W	132	ASD13CR1	8D	RW	166		CD		
PRT3GS	0E	RW	129	DCC23DR2	4E	RW	133	ASD13CR2	8E	RW	167		CE		
PRT3DM2	0F	RW	130	DCC23CR0	4F	#	134	ASD13CR3	8F	RW	168		CF		
PRT4DR	10	RW	127		50			ASD20CR0	90	RW	165	CUR_PP	D0	RW	189
PRT4IE	11	RW	128		51			ASD20CR1	91	RW	166	STK_PP	D1	RW	190
PRT4GS	12	RW	129		52			ASD20CR2	92	RW	167		D2		
PRT4DM2	13	RW	130		53			ASD20CR3	93	RW	168	IDX_PP	D3	RW	191
PRT5DR	14	RW	127		54			ASC21CR0	94	RW	161	MVR_PP	D4	RW	192
PRT5IE	15	RW	128		55			ASC21CR1	95	RW	162	MVW_PP	D5	RW	193
PRT5GS	16	RW	129		56			ASC21CR2	96	RW	163	I2C0_CFG	D6	RW	194
PRT5DM2	17	RW	130		57			ASC21CR3	97	RW	164	I2C0_SCR	D7	#	195
	18				58			ASD22CR0	98	RW	165	I2C0_DR	D8	RW	197
	19				59			ASD22CR1	99	RW	166	I2C0_MSCR	D9	#	198
	1A				5A			ASD22CR2	9A	RW	167	INT_CLR0	DA	RW	199
	1B				5B			ASD22CR3	9B	RW	168	INT_CLR1	DB	RW	201
	1C				5C			ASC23CR0	9C	RW	161	INT_CLR2	DC	RW	203
	1D				5D			ASC23CR1	9D	RW	162	INT_CLR3	DD	RW	204
	1E				5E			ASC23CR2	9E	RW	163	INT_MSK3	DE	RW	206
	1F				5F			ASC23CR3	9F	RW	164	INT_MSK2	DF	RW	207
DBC00DR0	20	#	131	AMX_IN	60	RW	145	DEC0_DH	A0	RC	169	INT_MSK0	E0	RW	208
DBC00DR1	21	W	132	AMUX_CFG	61	RW	146	DEC0_DL	A1	RC	170	INT_MSK1	E1	RW	209
DBC00DR2	22	RW	133	CLK_CR3	62	RW	147	DEC1_DH	A2	RC	169	INT_VC	E2	RC	210
DBC00CR0	23	#	134	ARF_CR	63	RW	148	DEC1_DL	A3	RC	170	RES_WDT	E3	W	211
DBC01DR0	24	#	131	CMP_CR0	64	#	149	DEC2_DH	A4	RC	169	I2C1_SCR	E4	#	195
DBC01DR1	25	W	132	ASY_CR	65	#	150	DEC2_DL	A5	RC	170	I2C1_MSCR	E5	#	198
DBC01DR2	26	RW	133	CMP_CR1	66	RW	151	DEC3_DH	A6	RC	169	DEC_CR0	E6	RW	212
DBC01CR0	27	#	134	I2C1_DR	67	RW	197	DEC3_DL	A7	RC	170	DEC_CR1	E7	RW	213
DCC02DR0	28	#	131		68			MUL1_X	A8	W	171	MUL0_X	E8	W	171
DCC02DR1	29	W	132		69			MUL1_Y	A9	W	172	MUL0_Y	E9	W	172
DCC02DR2	2A	RW	133	SADC_DH	6A	RW	153	MUL1_DH	AA	R	173	MUL0_DH	EA	R	173
DCC02CR0	2B	#	134	SADC_DL	6B	RW	154	MUL1_DL	AB	R	174	MUL0_DL	EB	R	174
DCC03DR0	2C	#	131	TMP_DR0	6C	RW	155	ACC1_DR1	AC	RW	175	ACC0_DR1	EC	RW	175
DCC03DR1	2D	W	132	TMP_DR1	6D	RW	155	ACC1_DR0	AD	RW	176	ACC0_DR0	ED	RW	176
DCC03DR2	2E	RW	133	TMP_DR2	6E	RW	155	ACC1_DR3	AE	RW	177	ACC0_DR3	EE	RW	177
DCC03CR0	2F	#	134	TMP_DR3	6F	RW	155	ACC1_DR2	AF	RW	178	ACC0_DR2	EF	RW	178
DBC10DR0	30	#	131	ACC00CR3	70	RW	156	RDI0RI	B0	RW	179		F0		
DBC10DR1	31	W	132	ACC00CR0	71	RW	157	RDI0SYN	B1	RW	180		F1		
DBC10DR2	32	RW	133	ACC00CR1	72	RW	159	RDI0IS	B2	RW	181		F2		
DBC10CR0	33	#	134	ACC00CR2	73	RW	160	RDI0LT0	B3	RW	182		F3		
DBC11DR0	34	#	131	ACC01CR3	74	RW	156	RDI0LT1	B4	RW	184		F4		
DBC11DR1	35	W	132	ACC01CR0	75	RW	157	RDI0RO0	B5	RW	186		F5		
DBC11DR2	36	RW	133	ACC01CR1	76	RW	159	RDI0RO1	B6	RW	187		F6		
DBC11CR0	37	#	134	ACC01CR2	77	RW	160	RDI0DSM	B7	RW	188	CPU_F	F7	I	214
DCC12DR0	38	#	131	ACC02CR3	78	RW	156	RDI1RI	B8	RW	179		F8		
DCC12DR1	39	W	132	ACC02CR0	79	RW	157	RDI1SYN	B9	RW	180		F9		
DCC12DR2	3A	RW	133	ACC02CR1	7A	RW	159	RDI1IS	BA	RW	181		FA		
DCC12CR0	3B	#	134	ACC02CR2	7B	RW	160	RDI1LT0	BB	RW	182		FB		
DCC13DR0	3C	#	131	ACC03CR3	7C	RW	156	RDI1LT1	BC	RW	184	DAC1_D[0]	FC	RW	215
DCC13DR1	3D	W	132	ACC03CR0	7D	RW	157	RDI1RO0	BD	RW	186	DAC0_D[1]	FD	RW	215
DCC13DR2	3E	RW	133	ACC03CR1	7E	RW	159	RDI1RO1	BE	RW	187	CPU_SCR1	FE	#	216
DCC13CR0	3F	#	134	ACC03CR2	7F	RW	160	RDI1DSM	BF	RW	188	CPU_SCR0	FF	#	217

Gray fields are reserved. # Access is bit specific. [0]Corresponds to right port. [1]Corresponds to left port.

Register Map Bank 1 Table: Configuration Space

Name	Addr (1,Hex)	Access	Page	Name	Addr (1,Hex)	Access	Page	Name	Addr (1,Hex)	Access	Page	Name	Addr (1,Hex)	Access	Page
PRT0DM0	00	RW	218	DBC20FN	40	RW	222		80			RDI2RI	C0	RW	179
PRT0DM1	01	RW	219	DBC20IN	41	RW	224	SADC_TSCMPL	81	RW	259	RDI2SYN	C1	RW	180
PRT0IC0	02	RW	220	DBC20OU	42	RW	226	SADC_TSCMPH	82	RW	260	RDI2IS	C2	RW	181
PRT0IC1	03	RW	221	DBC20CR1	43	RW	228	ACE_AMD_CR1	83	RW	261	RDI2LT0	C3	RW	182
PRT1DM0	04	RW	218	DBC21FN	44	RW	222		84			RDI2LT1	C4	RW	184
PRT1DM1	05	RW	219	DBC21IN	45	RW	224	ACE_PWM_CR	85	RW	262	RDI2RO0	C5	RW	186
PRT1IC0	06	RW	220	DBC21OU	46	RW	226	ACE_ADC0_CR	86	RW	263	RDI2RO1	C6	RW	187
PRT1IC1	07	RW	221	DBC21CR1	47	RW	228	ACE_ADC1_CR	87	RW	263	RDI2DSM	C7	RW	188
PRT2DM0	08	RW	218	DCC22FN	48	RW	222		88				C8		
PRT2DM1	09	RW	219	DCC22IN	49	RW	224	ACE_CLK_CR0	89	RW	264		C9		
PRT2IC0	0A	RW	220	DCC22OU	4A	RW	226	ACE_CLK_CR1	8A	RW	265		CA		
PRT2IC1	0B	RW	221	DCC22CR1	4B	RW	228	ACE_CLK_CR3	8B	RW	266		CB		
PRT3DM0	0C	RW	218	DCC23FN	4C	RW	222		8C				CC		
PRT3DM1	0D	RW	219	DCC23IN	4D	RW	224	ACE01CR1	8D	RW	256		CD		
PRT3IC0	0E	RW	220	DCC23OU	4E	RW	226	ACE01CR2	8E	RW	257		CE		
PRT3IC1	0F	RW	221	DCC23CR1	4F	RW	228	ASE11CR0	8F	RW	258		CF		
PRT4DM0	10	RW	218		50				90			GDI_O_IN	D0	RW	286
PRT4DM1	11	RW	219		51			DEC0_CR0	91	RW	267	GDI_E_IN	D1	RW	287
PRT4IC0	12	RW	220		52			DEC_CR3	92	RW	268	GDI_O_OU	D2	RW	288
PRT4IC1	13	RW	221		53				93			GDI_E_OU	D3	RW	289
PRT5DM0	14	RW	218		54				94			DEC0_ CR	D4	RW	290
PRT5DM1	15	RW	219		55			DEC1_CR0	95	RW	267	DEC1_CR	D5	RW	290
PRT5IC0	16	RW	220		56			DEC_CR4	96	RW	269	DEC2 CR	D6	RW	290
PRT5IC1	17	RW	221		57				97			DEC3_CR	D7	RW	290
	18				58				98			MUX_CR0	D8	RW	291
	19				59			DEC2_CR0	99	RW	267	MUX_CR1	D9	RW	291
	1A				5A			DEC_CR5	9A	RW	270	MUX_CR2	DA	RW	291
	1B				5B				9B			MUX_CR3	DB	RW	291
	1C				5C				9C			IDAC_CR1	DC	RW	292
	1D				5D			DEC3_CR0	9D	RW	267	OSC_GO_EN	DD	RW	293
	1E				5E				9E			OSC_CR4	DE	RW	294
	1F				5F				9F			OSC_CR3	DF	RW	295
DBC00FN	20	RW	222	CLK_CR0	60	RW	236	GDI_O_IN_CR	A0	RW	271	OSC_CR0	E0	RW	296
DBC00IN	21	RW	224	CLK_CR1	61	RW	237	GDI_E_IN_CR	A1	RW	272	OSC_CR1	E1	RW	297
DBC00OU	22	RW	226	ABF_CR0	62	RW	238	GDI_O_OU_CR	A2	RW	273	OSC_CR2	E2	RW	298
DBC00CR1	23	RW	228	AMD_CR0	63	RW	239	GDI_E_OU_CR	A3	RW	274	VLT_CR	E3	RW	299
DBC01FN	24	RW	222	CMP_GO_EN	64	RW	240	RTC_H	A4	RW	275	VLT_CMP	E4	R	300
DBC01IN	25	RW	224	CMP_GO_EN1	65	RW	241	RTC_M	A5	RW	276	ADC0_TR	E5	RW	301
DBC01OU	26	RW	226	AMD_CR1	66	RW	242	RTC_S	A6	RW	277	ADC1_TR	E6	RW	301
DBC01CR1	27	RW	228	ALT_CR0	67	RW	243	RTC_CR	A7	RW	278	IDAC_MODE	E7	RW	302
DCC02FN	28	RW	222	ALT_CR1	68	RW	244	SADC_CR0	A8	RW	279	IMO_TR	E8	RW	303
DCC02IN	29	RW	224	CLK_CR2	69	RW	245	SADC_CR1	A9	RW	280	ILO_TR	E9	RW	304
DCC02OU	2A	RW	226	AMUX_CFG1	6A	RW	246	SADC_CR2	AA	RW	281	BDG_TR	EA	RW	305
DCC02CR1	2B	RW	228	I2C1_CFG	6B	RW	194	SADC_CR3	AB	RW	282	ECO_TR	EB	RW	306
DCC03FN	2C	RW	222	TMP_DR0	6C	RW	155	SADC_CR4	AC	#	283	MUX_CR4	EC	RW	291
DCC03IN	2D	RW	224	TMP_DR1	6D	RW	155	I2C0_ADDR	AD	RW	284	MUX_CR5	ED	RW	291
DCC03OU	2E	RW	226	TMP_DR2	6E	RW	155	I2C1_ADDR	AE	RW	284		EE		
DCC03CR1	2F	RW	228	TMP_DR3	6F	RW	155	AMUX_CLK	AF	RW	285	IMO_TR1	EF	RW	291
DBC10FN	30	RW	222		70			RDI0RI	B0	RW	179		F0		
DBC10IN	31	RW	224	SADC_TSCR0	71	RW	247	RDI0SYN	B1	RW	180		F1		
DBC10OU	32	RW	226	SADC_TSCR1	72	RW	248	RDI0IS	B2	RW	181		F2		
DBC10CR1	33	RW	228	ACE_AMD_CR0	73	RW	249	RDI0LT0	B3	RW	182		F3		
DBC11FN	34	RW	222		74			RDI0LT1	B4	RW	184		F4		
DBC11IN	35	RW	224	ACE_AMX_IN	75	RW	250	RDI0RO0	B5	RW	186		F5		
DBC11OU	36	RW	226	ACE_CMP_CR0	76	RW	251	RDI0RO1	B6	RW	187		F6		
DBC11CR1	37	RW	228	ACE_CMP_CR1	77	RW	252	RDI0DSM	B7	RW	188	CPU_F	F7	RL	214
DCC12FN	38	RW	222		78			RDI1RI	B8	RW	179		F8		
DCC12IN	39	RW	224	ACE_CMP_GI_EN	79	RW	253	RDI1SYN	B9	RW	180		F9		
DCC12OU	3A	RW	226	ACE_ALT_CR0	7A	RW	254	RDI1IS	BA	RW	181	FLS_PR1	FA	RW	308
DCC12CR1	3B	RW	228	ACE_ABF_CR0	7B	RW	255	RDI1LT0	BB	RW	182		FB		
DCC13FN	3C	RW	222		7C			RDI1LT1	BC	RW	184		FC		
DCC13IN	3D	RW	224	ACE00CR1	7D	RW	256	RDI1RO0	BD	RW	186	IDAC_CR0	FD	RW	309
DCC13OU	3E	RW	226	ACE00CR2	7E	RW	257	RDI1RO1	BE	RW	187	CPU_SCR1	FE	#	216
DCC13CR1	3F	RW	228	ASE10CR0	7F	RW	258	RDI1DSM	BF	RW	188	CPU_SCR0	FF	#	217

Gray fields are reserved. # Access is bit specific.

CY8C28x52 Register Maps

Register Map Bank 0 Table: User Space

Name	Addr (0,Hex)	Access	Page	Name	Addr (0,Hex)	Access	Page	Name	Addr (0,Hex)	Access	Page	Name	Addr (0,Hex)	Access	Page
PRT0DR	00	RW	127		40			ASC10CR0	80	RW	161		C0		
PRT0IE	01	RW	128		41			ASC10CR1	81	RW	162		C1		
PRT0GS	02	RW	129		42			ASC10CR2	82	RW	163		C2		
PRT0DM2	03	RW	130		43			ASC10CR3	83	RW	164		C3		
PRT1DR	04	RW	127		44			ASD11CR0	84	RW	165		C4		
PRT1IE	05	RW	128		45			ASD11CR1	85	RW	166		C5		
PRT1GS	06	RW	129		46			ASD11CR2	86	RW	167		C6		
PRT1DM2	07	RW	130		47			ASD11CR3	87	RW	168		C7		
PRT2DR	08	RW	127		48			ASC12CR0	88	RW	161		C8		
PRT2IE	09	RW	128		49			ASC12CR1	89	RW	162		C9		
PRT2GS	0A	RW	129		4A			ASC12CR2	8A	RW	163		CA		
PRT2DM2	0B	RW	130		4B			ASC12CR3	8B	RW	164		CB		
PRT3DR	0C	RW	127		4C			ASD13CR0	8C	RW	165		CC		
PRT3IE	0D	RW	128		4D			ASD13CR1	8D	RW	166		CD		
PRT3GS	0E	RW	129		4E			ASD13CR2	8E	RW	167		CE		
PRT3DM2	0F	RW	130		4F			ASD13CR3	8F	RW	168		CF		
PRT4DR	10	RW	127		50			ASD20CR0	90	RW	165	CUR_PP	D0	RW	189
PRT4IE	11	RW	128		51			ASD20CR1	91	RW	166	STK_PP	D1	RW	190
PRT4GS	12	RW	129		52			ASD20CR2	92	RW	167		D2		
PRT4DM2	13	RW	130		53			ASD20CR3	93	RW	168	IDX_PP	D3	RW	191
PRT5DR	14	RW	127		54			ASC21CR0	94	RW	161	MVR_PP	D4	RW	192
PRT5IE	15	RW	128		55			ASC21CR1	95	RW	162	MVW_PP	D5	RW	193
PRT5GS	16	RW	129		56			ASC21CR2	96	RW	163	I2C0_CFG	D6	RW	194
PRT5DM2	17	RW	130		57			ASC21CR3	97	RW	164	I2C0_SCR	D7	#	195
	18				58			ASD22CR0	98	RW	165	I2C0_DR	D8	RW	197
	19				59			ASD22CR1	99	RW	166	I2C0_MSCR	D9	#	198
	1A				5A			ASD22CR2	9A	RW	167	INT_CLR0	DA	RW	199
	1B				5B			ASD22CR3	9B	RW	168	INT_CLR1	DB	RW	201
	1C				5C			ASC23CR0	9C	RW	161	INT_CLR2	DC	RW	203
	1D				5D			ASC23CR1	9D	RW	162	INT_CLR3	DD	RW	204
	1E				5E			ASC23CR2	9E	RW	163	INT_MSK3	DE	RW	206
	1F				5F			ASC23CR3	9F	RW	164	INT_MSK2	DF	RW	207
DBC00DR0	20	#	131	AMX_IN	60	RW	145	DEC0_DH	A0	RC	169	INT_MSK0	E0	RW	208
DBC00DR1	21	W	132	AMUX_CFG	61	RW	146	DEC0_DL	A1	RC	170	INT_MSK1	E1	RW	209
DBC00DR2	22	RW	133	CLK_CR3	62	RW	147	DEC1_DH	A2	RC	169	INT_VC	E2	RC	210
DBC00CR0	23	#	134	ARF_CR	63	RW	148	DEC1_DL	A3	RC	170	RES_WDT	E3	W	211
DBC01DR0	24	#	131	CMP_CR0	64	#	149	DEC2_DH	A4	RC	169		E4		
DBC01DR1	25	W	132	ASY_CR	65	#	150	DEC2_DL	A5	RC	170		E5		
DBC01DR2	26	RW	133	CMP_CR1	66	RW	151	DEC3_DH	A6	RC	169	DEC_CR0	E6	RW	212
DBC01CR0	27	#	134					DEC3_DL	A7	RC	170	DEC_CR1	E7	RW	213
DCC02DR0	28	#	131					MUL1_X	A8	W	171	MUL0_X	E8	W	171
DCC02DR1	29	W	132					MUL1_Y	A9	W	172	MUL0_Y	E9	W	172
DCC02DR2	2A	RW	133					MUL1_DH	AA	R	173	MUL0_DH	EA	R	173
DCC02CR0	2B	#	134					MUL1_DL	AB	R	174	MUL0_DL	EB	R	174
DCC03DR0	2C	#	131	TMP_DR0	6C	RW	155	ACC1_DR1	AC	RW	175	ACC0_DR1	EC	RW	175
DCC03DR1	2D	W	132	TMP_DR1	6D	RW	155	ACC1_DR0	AD	RW	176	ACC0_DR0	ED	RW	176
DCC03DR2	2E	RW	133	TMP_DR2	6E	RW	155	ACC1_DR3	AE	RW	177	ACC0_DR3	EE	RW	177
DCC03CR0	2F	#	134	TMP_DR3	6F	RW	155	ACC1_DR2	AF	RW	178	ACC0_DR2	EF	RW	178
DBC10DR0	30	#	131	ACC00CR3	70	RW	156	RDI0RI	B0	RW	179		F0		
DBC10DR1	31	W	132	ACC00CR0	71	RW	157	RDI0SYN	B1	RW	180		F1		
DBC10DR2	32	RW	133	ACC00CR1	72	RW	159	RDI0IS	B2	RW	181		F2		
DBC10CR0	33	#	134	ACC00CR2	73	RW	160	RDI0LT0	B3	RW	182		F3		
DBC11DR0	34	#	131	ACC01CR3	74	RW	156	RDI0LT1	B4	RW	184		F4		
DBC11DR1	35	W	132	ACC01CR0	75	RW	157	RDI0RO0	B5	RW	186		F5		
DBC11DR2	36	RW	133	ACC01CR1	76	RW	159	RDI0RO1	B6	RW	187		F6		
DBC11CR0	37	#	134	ACC01CR2	77	RW	160	RDI0DSM	B7	RW	188	CPU_F	F7	I	214
DCC12DR0	38	#	131	ACC02CR3	78	RW	156	RDI1RI	B8	RW	179		F8		
DCC12DR1	39	W	132	ACC02CR0	79	RW	157	RDI1SYN	B9	RW	180		F9		
DCC12DR2	3A	RW	133	ACC02CR1	7A	RW	159	RDI1IS	BA	RW	181		FA		
DCC12CR0	3B	#	134	ACC02CR2	7B	RW	160	RDI1LT0	BB	RW	182		FB		
DCC13DR0	3C	#	131	ACC03CR3	7C	RW	156	RDI1LT1	BC	RW	184	DAC1_D[0]	FC	RW	215
DCC13DR1	3D	W	132	ACC03CR0	7D	RW	157	RDI1RO0	BD	RW	186	DAC0_D[1]	FD	RW	215
DCC13DR2	3E	RW	133	ACC03CR1	7E	RW	159	RDI1RO1	BE	RW	187	CPU_SCR1	FE	#	216
DCC13CR0	3F	#	134	ACC03CR2	7F	RW	160	RDI1DSM	BF	RW	188	CPU_SCR0	FF	#	217

Gray fields are reserved. # Access is bit specific. [0]Corresponds to right port. [1]Corresponds to left port.

Register Map Bank 1 Table: Configuration Space

Name	Addr (1,Hex)	Access	Page	Name	Addr (1,Hex)	Access	Page	Name	Addr (1,Hex)	Access	Page	Name	Addr (1,Hex)	Access	Page
PRT0DM0	00	RW	218	DBC20FN	40	RW	222		80			RDI2RI	C0	RW	179
PRT0DM1	01	RW	219	DBC20IN	41	RW	224	SADC_TSCMPL	81	RW	259	RDI2SYN	C1	RW	180
PRT0IC0	02	RW	220	DBC20OU	42	RW	226	SADC_TSCMPH	82	RW	260	RDI2IS	C2	RW	181
PRT0IC1	03	RW	221	DBC20CR1	43	RW	228	ACE_AMD_CR1	83	RW	261	RDI2LT0	C3	RW	182
PRT1DM0	04	RW	218	DBC21FN	44	RW	222		84			RDI2LT1	C4	RW	184
PRT1DM1	05	RW	219	DBC21IN	45	RW	224	ACE_PWM_CR	85	RW	262	RDI2RO0	C5	RW	186
PRT1IC0	06	RW	220	DBC21OU	46	RW	226	ACE_ADC0_CR	86	RW	263	RDI2RO1	C6	RW	187
PRT1IC1	07	RW	221	DBC21CR1	47	RW	228	ACE_ADC1_CR	87	RW	263	RDI2DSM	C7	RW	188
PRT2DM0	08	RW	218	DCC22FN	48	RW	222		88				C8		
PRT2DM1	09	RW	219	DCC22IN	49	RW	224	ACE_CLK_CR0	89	RW	264		C9		
PRT2IC0	0A	RW	220	DCC22OU	4A	RW	226	ACE_CLK_CR1	8A	RW	265		CA		
PRT2IC1	0B	RW	221	DCC22CR1	4B	RW	228	ACE_CLK_CR3	8B	RW	266		CB		
PRT3DM0	0C	RW	218	DCC23FN	4C	RW	222		8C				CC		
PRT3DM1	0D	RW	219	DCC23IN	4D	RW	224	ACE01CR1	8D	RW	256		CD		
PRT3IC0	0E	RW	220	DCC23OU	4E	RW	226	ACE01CR2	8E	RW	257		CE		
PRT3IC1	0F	RW	221	DCC23CR1	4F	RW	228	ASE11CR0	8F	RW	258		CF		
PRT4DM0	10	RW	218		50				90			GDI_O_IN	D0	RW	286
PRT4DM1	11	RW	219		51			DEC0_CR0	91	RW	267	GDI_E_IN	D1	RW	287
PRT4IC0	12	RW	220		52			DEC_CR3	92	RW	268	GDI_O_OU	D2	RW	288
PRT4IC1	13	RW	221		53				93			GDI_E_OU	D3	RW	289
PRT5DM0	14	RW	218		54				94			DEC0_ CR	D4	RW	290
PRT5DM1	15	RW	219		55			DEC1_CR0	95	RW	267	DEC1_CR	D5	RW	290
PRT5IC0	16	RW	220		56			DEC_CR4	96	RW	269	DEC2 CR	D6	RW	290
PRT5IC1	17	RW	221		57				97			DEC3_CR	D7	RW	290
	18				58				98			MUX_CR0	D8	RW	291
	19				59			DEC2_CR0	99	RW	267	MUX_CR1	D9	RW	291
	1A				5A			DEC_CR5	9A	RW	270	MUX_CR2	DA	RW	291
	1B				5B				9B			MUX_CR3	DB	RW	291
	1C				5C				9C			IDAC_CR1	DC	RW	292
	1D				5D			DEC3_CR0	9D	RW	267	OSC_GO_EN	DD	RW	293
	1E				5E				9E			OSC_CR4	DE	RW	294
	1F				5F				9F			OSC_CR3	DF	RW	295
DBC00FN	20	RW	222	CLK_CR0	60	RW	236	GDI_O_IN_CR	A0	RW	271	OSC_CR0	E0	RW	296
DBC00IN	21	RW	224	CLK_CR1	61	RW	237	GDI_E_IN_CR	A1	RW	272	OSC_CR1	E1	RW	297
DBC00OU	22	RW	226	ABF_CR0	62	RW	238	GDI_O_OU_CR	A2	RW	273	OSC_CR2	E2	RW	298
DBC00CR1	23	RW	228	AMD_CR0	63	RW	239	GDI_E_OU_CR	A3	RW	274	VLT_CR	E3	RW	299
DBC01FN	24	RW	222	CMP_GO_EN	64	RW	240	RTC_H	A4	RW	275	VLT_CMP	E4	R	300
DBC01IN	25	RW	224	CMP_GO_EN1	65	RW	241	RTC_M	A5	RW	276	ADC0_TR	E5	RW	301
DBC01OU	26	RW	226	AMD_CR1	66	RW	242	RTC_S	A6	RW	277	ADC1_TR	E6	RW	301
DBC01CR1	27	RW	228	ALT_CR0	67	RW	243	RTC_CR	A7	RW	278	IDAC_MODE	E7	RW	302
DCC02FN	28	RW	222	ALT_CR1	68	RW	244	SADC_CR0	A8	RW	279	IMO_TR	E8	RW	303
DCC02IN	29	RW	224	CLK_CR2	69	RW	245	SADC_CR1	A9	RW	280	ILO_TR	E9	RW	304
DCC02OU	2A	RW	226	AMUX_CFG1	6A	RW	246	SADC_CR2	AA	RW	281	BDG_TR	EA	RW	305
DCC02CR1	2B	RW	228	I2C1_CFG	6B	RW	194	SADC_CR3	AB	RW	282	ECO_TR	EB	RW	306
DCC03FN	2C	RW	222	TMP_DR0	6C	RW	155	SADC_CR4	AC	#	283	MUX_CR4	EC	RW	291
DCC03IN	2D	RW	224	TMP_DR1	6D	RW	155	I2C0_ADDR	AD	RW	284	MUX_CR5	ED	RW	291
DCC03OU	2E	RW	226	TMP_DR2	6E	RW	155		AE				EE		
DCC03CR1	2F	RW	228	TMP_DR3	6F	RW	155	AMUX_CLK	AF	RW	285		EF		
DBC10FN	30	RW	222		70			RDI0RI	B0	RW	179		F0		
DBC10IN	31	RW	224	SADC_TSCR0	71	RW	247	RDI0SYN	B1	RW	180		F1		
DBC10OU	32	RW	226	SADC_TSCR1	72	RW	248	RDI0IS	B2	RW	181		F2		
DBC10CR1	33	RW	228	ACE_AMD_CR0	73	RW	249	RDI0LT0	B3	RW	182		F3		
DBC11FN	34	RW	222		74			RDI0LT1	B4	RW	184		F4		
DBC11IN	35	RW	224	ACE_AMX_IN	75	RW	250	RDI0RO0	B5	RW	186		F5		
DBC11OU	36	RW	226	ACE_CMP_CR0	76	RW	251	RDI0RO1	B6	RW	187		F6		
DBC11CR1	37	RW	228	ACE_CMP_CR1	77	RW	252	RDI0DSM	B7	RW	188	CPU_F	F7	RL	214
DCC12FN	38	RW	222		78			RDI1RI	B8	RW	179		F8		
DCC12IN	39	RW	224	ACE_CMP_GI_EN	79	RW	253	RDI1SYN	B9	RW	180		F9		
DCC12OU	3A	RW	226	ACE_ALT_CR0	7A	RW	254	RDI1IS	BA	RW	181	FLS_PR1	FA	RW	308
DCC12CR1	3B	RW	228	ACE_ABF_CR0	7B	RW	255	RDI1LT0	BB	RW	182		FB		
DCC13FN	3C	RW	222		7C			RDI1LT1	BC	RW	184		FC		
DCC13IN	3D	RW	224	ACE00CR1	7D	RW	256	RDI1RO0	BD	RW	186	IDAC_CR0	FD	RW	309
DCC13OU	3E	RW	226	ACE00CR2	7E	RW	257	RDI1RO1	BE	RW	187	CPU_SCR1	FE	#	216
DCC13CR1	3F	RW	228	ASE10CR0	7F	RW	258	RDI1DSM	BF	RW	188	CPU_SCR0	FF	#	217

Gray fields are reserved. # Access is bit specific.

13. Register Details

This chapter is a reference for all the PSoC® device registers in address order, for Bank 0 and Bank 1. The most detailed descriptions of the PSoC registers are in the Register Definitions section of each chapter. The registers that are in both banks are incorporated with the Bank 0 registers, designated with an 'x', rather than a '0' preceding the comma in the address. Bank 0 registers are listed first and begin on page 127. Bank 1 registers are listed second and begin on page 218. A condensed view of all the registers is shown in the "Register Map Bank 0 Table: User Space" on page 120 and the "Register Map Bank 1 Table: Configuration Space" on page 121.

13.1 Maneuvering Around the Registers

For ease-of-use, this chapter has been formatted so that there is one register per page, although some registers use two pages. On each page, from top to bottom, there are four sections:

1. Register name and address (from lowest to highest).
2. Register table showing the bit organization, with reserved bits grayed out.
3. Written description of register specifics or links to additional register information.
4. Detailed register bit descriptions.

Note that some registers are directly related to the digital and analog functions; therefore, these registers might have more than one register table (number 2 above). This is due to the fact that the PSoC devices have different digital row and analog column characteristics which use different bits in the same register. To find out the number of digital rows and analog columns your PSoC device has, refer to the following table.

CY8C28xxx Device Characteristics

CY8C28xxx Part Number	Digital I/O	Digital Rows	Digital Blocks	Analog Inputs	Analog Outputs	Analog Columns	Regular Analog Blocks	Limited Analog Blocks
CY8C28403	24	3	12	8	0	0	0	0
CY8C28413	24	3	12	24	0	0	0	4
CY8C28513	40	3	12	40	0	0	0	4
CY8C28623	44	3	12	10	2	2	6	0
CY8C28433	24	3	12	24	2	2	6	4
CY8C28533	40	3	12	40	2	2	6	4
CY8C28243	16	3	12	16	4	4	12	0
CY8C28643	44	3	12	44	4	4	12	0
CY8C28445	24	3	12	24	4	4	12	4
CY8C28545	40	3	12	40	4	4	12	4
CY8C28645	44	3	12	44	4	4	12	4
CY8C28452	24	2	8	24	4	4	12	4

Use the register tables, in addition to the detailed register bit descriptions, to determine which bits are reserved for some smaller PSoC devices. Reserved bits are grayed table cells and are not described in the bit description section. Reserved bits should always be written with a value of ‘0’.

Register Conventions

The following table lists the register conventions that are specific to this chapter.

Register Conventions

Convention	Example	Description
‘x’ in a register name	ACCxxCR1	Multiple instances/address ranges of the same register
R	R : 00	Read register or bit(s)
W	W : 00	Write register or bit(s)
L	RL : 00	Logical register or bit(s)
C	RC : 00	Clearable register or bit(s)
00	RW : 00	Reset value is 0x00 or 00h
XX	RW : XX	Register is not reset
0,	0,04h	Register is in bank 0
1,	1,23h	Register is in bank 1
x,	x,F7h	Register exists in register bank 0 and register bank 1
2L	2L Column	Register bit table designation for PSoC devices with two column limited functionality
Empty, grayed-out table cell		Reserved bit or group of bits, unless otherwise stated

13.1.1 Register Naming Conventions

There are a few register naming conventions used in this manual to abbreviate repetitious register information by using a lower case ‘x’ in the register name. The convention to interpret these register names is as follows.

- For all registers, an ‘x’ before the comma in the address field indicates that the register can be accessed or written to no matter what bank is used. For example, the M8C flag register’s (CPU_F) address is ‘x,F7h’ meaning it is located in bank 0 and bank 1 at F7h.
- For digital block registers, the first ‘x’ in some register names represents either “B” for basic or “C” for communication. For rows of digital PSoC blocks and their registers, the second ‘x’ set represents <Prefix>mn<Suffix>, where m = row index, n = column index. Therefore, DCC32CR0 (written DxCxxCR0) is a digital communication register for a digital PSoC block in row 3 column 2.
- For digital row registers, the ‘x’ in the digital register’s name represents the digital row index. For example, if the RDIxIS register name encompasses four registers, there is one for each digital row index and unique address (RDI0IS, RDI1IS, RDI2IS, and RDI3IS).
- For analog column registers, the naming convention for the switched capacitor and continuous time registers and their arrays of PSoC blocks is <Prefix>mn<Suffix>, where m = row index, n = column index. Therefore, ASC21CR2 (written ASCxxCR2) is a register for an analog PSoC block in row 2 column 1

13.2 Bank 0 Registers

The following registers are all in bank 0 and are listed in address order. An ‘x’ before the comma in the register’s address indicates that the register can be accessed independent of the XIO bit in the CPU_F register. Registers that are in both Bank 0 and Bank 1 are listed in address order in Bank 0. For example, the RDIxLT1 register has an address of x,B4h and is in both Bank 0 and Bank 1.

13.2.1 PRTxDR

Port Data Register

Individual Register Names and Addresses:

PRT0DR : 0,00h
PRT1DR : 0,04h
PRT2DR : 0,08h
PRT3DR : 0,0Ch
PRT4DR : 0,10h
PRT5DR : 0,14h

	7	6	5	4	3	2	1	0
Access : POR	RW : 00							
Bit Name	Data[7:0]							

This register allows for write or read access of the current logical equivalent of the voltage on the pin.

For Port 5, the upper ***nibble*** of this register returns the last data bus value when read and should be masked off prior to using this information. **Note** For devices with less than 5 ports, the extra registers can be used as temp registers.

For additional information, refer to the “Register Definitions” on page 76 in the GPIO chapter.

Bit	Name	Description
7:0	**Data[7:0]**	Write value to port or read value from port. Reads return the state of the pin, not the value in the PRTxDR register.

13.2.2 PRTxIE

Port Interrupt Enable Register

Individual Register Names and Addresses:

PRT0IE : 0,01h PRT1IE : 0,05h PRT2IE : 0,09h PRT3IE : 0,0Dh
PRT4IE : 0,11h PRT5IE : 0,15h

	7	6	5	4	3	2	1	0
Access : POR	RW : 00							
Bit Name	Interrupt Enables[7:0]							

This register is used to enable or disable the interrupt enable internal to the GPIO block.

For Port 5, the upper nibble of this register returns the last data bus value when read and should be masked off prior to using this information. For additional information, refer to the “Register Definitions” on page 76 in the GPIO chapter.

Bit	Name	Description
7:0	**Interrupt Enables[7:0]**	A bit set in this register will enable the corresponding port pin interrupt. 0 Port pin interrupt disabled for the corresponding pin. 1 Port pin interrupt enabled for the corresponding pin.

13.2.3 PRTxGS

Port Global Select Register

Individual Register Names and Addresses:

PRT0GS : 0,02h
PRT1GS : 0,06h
PRT2GS : 0,0Ah
PRT3GS : 0,0Eh
PRT4GS : 0,12h
PRT5GS : 0,16h

	7	6	5	4	3	2	1	0
Access : POR	RW : 00							
Bit Name	Global Select[7:0]							

This register is used to select the block for connection to global inputs or outputs.

For Port 5, the upper nibble of this register returns the last data bus value when read and should be masked off prior to using this information. For additional information, refer to the “Register Definitions” on page 76 in the GPIO chapter.

Bit	Name	Description
7:0	**Global Select[7:0]**	A bit set in this register connects the corresponding port pin to an internal global bus. This connection is used to input or output digital signals to or from the digital blocks. 0 Global function disabled. The pin value is determined by the PRTxDR bit value and port configuration registers. 1 Global function enabled. Direction depends on mode bits for the pin (registers PRTxDM0, PRTxDM1, and PRTxDM2).

13.2.4 PRTxDM2

Port Drive Mode Bit 2 Register

Individual Register Names and Addresses:

PRT0DM2 : 0,03h PRT1DM2 : 0,07h PRT2DM2 : 0,0Bh PRT3DM2 : 0,0Fh
PRT4DM2 : 0,13h PRT5DM2 : 0,17h

	7	6	5	4	3	2	1	0
Access : POR	RW : FFh							
Bit Name	Drive Mode 2[7:0]							

This register is one of three registers whose combined value determines the unique Drive mode of each bit in a GPIO port.

In this register, there are eight possible drive modes for each port pin. Three mode bits are required to select one of these modes, and these three bits are spread into three different registers (the PRTxDM0 register on page 218, the PRTxDM1 register on page 219, and the PRTxDM2 register). The bit position of the affected port pin (for example, Pin[2] in Port 0) is the same as the bit position of each of the three drive mode register bits that control the Drive mode for that pin (for example: PRT0DM0[2], PRT0DM1[2], and PRT0DM2[2]). The three bits from the three registers are treated as a group. These are referred to as DM2, DM1, and DM0, or together as DM[2:0].

All Drive mode bits are shown in the sub-table below ([**2**10] refers to the combination (in order) of bits in a given bit position); however, this register only controls the ***most significant bit (MSb)*** of the Drive mode.

For Port 5, the upper nibble of this register returns the last data bus value when read and should be masked off prior to using this information. For additional information, refer to the "Register Definitions" on page 76 in the GPIO chapter.

Bit	Name	Description
7:0	**Drive Mode 2[7:0]**	Bit 2 of the Drive mode, for each pin of an 8-bit GPIO port.

[210]	Pin Output High	Pin Output Low	Notes
000b	Strong	Resistive	
001b	Strong	Strong	
010b	High-Z	High-Z	Digital input enabled.
011b	Resistive	Strong	
100b	Slow + strong	High-Z	
101b	Slow + strong	Slow + strong	
110b	High-Z	High-Z	Reset state. Digital input disabled for zero power.
111b	High-Z	Slow + strong	I^2C Compatible mode.

Note A bold digit, in the table, signifies that the digit is used in this register.

13.2.5 DxCxxDR0

Digital Basic/Communication Type C Block Data Register 0

Individual Register Names and Addresses:

DBC00DR0 : 0,20h	DBC01DR0 : 0,24h	DCC02DR0 : 0,28h	DCC03DR0 : 0,2Ch
DBC10DR0 : 0,30h	DBC11DR0 : 0,34h	DCC12DR0 : 0,38h	DCC13DR0 : 0,3Ch
DBC20DR0 : 0,40h	DBC21DR0 : 0,44h	DCC22DR0 : 0,48h	DCC23DR0 : 0,4Ch

	7	6	5	4	3	2	1	0
Access : POR	R : 00							
Bit Name	Data[7:0]							

This register is the data register for a digital block.

The use of this register is dependent on which function is selected for its block. This selection is made in the FN[2:0] bits of the DxCxxFN register on page 222. (For the Timer, Counter, Dead Band, CRCPRS, PWMDBL, and DSM functions, a read of the DxCxxDR0 register returns 00h and transfers DxCxxDR0 to DxCxxDR2.)

The naming convention for the digital basic/communication and control registers is as follows. The first ‘x’ in the digital register’s name represents either “B” for basic or “C” for communication. For rows of digital PSoC blocks and their registers, the second ‘x’ set represents <Prefix>mn<Suffix>, where m=row index, n=column index. Therefore, DBC21DR0 is a digital basic register for a digital PSoC block in row 2 column 1. Depending on the digital row characteristics of your PSoC device (see the table titled “PSoC Device Characteristics” on page 311), some addresses may not be available. For additional information, refer to the “Register Definitions” on page 348 in the Digital Blocks chapter.

Bit	Name	Description
7:0	**Data[7:0]**	Data for selected function.

Block Function	Register Function	DCC Only
Timer	Count Value	No
Counter	Count Value	No
Dead Band	Count Value	No
PWMDBL	Count Value	No
CRCPRS	LFSR *	No
SPIM	Shifter	Yes
SPIS	Shifter	Yes
TXUART	Shifter	Yes
RXUART	Shifter	Yes
DSM	Difference	Yes

* ***Linear Feedback Shift Register (LFSR)***

13.2.6 DxCxxDR1

Digital Basic/Communication Type C Block Data Register 1

Individual Register Names and Addresses:

DBC00DR1 : 0,21h	DBC01DR1 : 0,25h	DCC02DR1 : 0,29h	DCC03DR1 : 0,2Dh
DBC10DR1 : 0,31h	DBC11DR1 : 0,35h	DCC12DR1 : 0,39h	DCC13DR1 : 0,3Dh
DBC20DR1 : 0,41h	DBC21DR1 : 0,45h	DCC22DR1 : 0,49h	DCC23DR1 : 0,4Dh

	7	6	5	4	3	2	1	0
Access : POR	W : 00							
Bit Name	Data[7:0]							

This register is the data register for a digital block.

The use of this register is dependent on which function is selected for its block. This selection is made in the FN[2:0] bits of the DxCxxFN register on page 222. Refer to the DxCxxDR0 register on page 131 for naming convention and digital row availability information. For additional information, refer to the "Register Definitions" on page 348 in the Digital Blocks chapter.

Bit	Name	Description
7:0	**Data[7:0]**	Data for selected function.

Block Function	Register Function	DCC Only
Timer	Period	No
Counter	Period	No
Dead Band	Period	No
PWMDBL	Period	No
CRCPRS	Polynomial	No
SPIM	TX Buffer	Yes
SPIS	TX Buffer	Yes
TXUART	TX Buffer	Yes
RXUART	Not applicable	Yes
DSM	Initial Phase	Yes

13.2.7 DxCxxDR2

Digital Basic/Communication Type C Block Data Register 2

Individual Register Names and Addresses:

DBC00DR2 : 0,22h	DBC01DR2 : 0,26h	DCC02DR2 : 0,2Ah	DCC03DR2 : 0,2Eh
DBC10DR2 : 0,32h	DBC11DR2 : 0,36h	DCC12DR2 : 0,3Ah	DCC13DR2 : 0,3Eh
DBC20DR2 : 0,42h	DBC21DR2 : 0,46h	DCC22DR2 : 0,4Ah	DCC23DR2 : 0,4Eh

	7	6	5	4	3	2	1	0
Access : POR	RW : 00							
Bit Name	Data[7:0]							

This register is the data register for a digital block.

The use of this register is dependent on which function is selected for its block. This selection is made in the FN[2:0] bits of the DxCxxFN register on page 222. Refer to the DxCxxDR0 register on page 131 for naming convention and digital row availability information. For additional information, refer to the "Register Definitions" on page 348 in the Digital Blocks chapter.

* If the block is configured as SPIM, SPIS, or RXUART, this register is read only.

Bit	Name	Description
7:0	**Data[7:0]**	Data for selected function.

Block Function	Register Function	DCC Only
Timer	Capture/Compare	No
Counter	Compare	No
Dead Band	Buffer	No
PMWDBL	Compare	No
CRCPRS	Seed/Residue	No
SPIM	RX Buffer	Yes
SPIS	RX Buffer	Yes
TXUART	Not applicable	Yes
RXUART	RX Buffer	Yes
DMS	Density Value	Yes

13.2.8 DxCxxCR0 (Timer Control:000)

Digital Basic/Communication Type C Block Control Register 0

Individual Register Names and Addresses:

DBC00CR0 : 0,23h	DBC01CR0 : 0,27h	DCC02CR0 : 0,2Bh	DCC03CR0 : 0,2Fh
DBC10CR0 : 0,33h	DBC11CR0 : 0,37h	DCC12CR0 : 0,3Bh	DCC13CR0 : 0,3Fh
DBC20CR0 : 0,43h	DBC21CR0 : 0,47h	DCC22CR0 : 0,4Bh	DCC23CR0 : 0,4Fh

	7	6	5	4	3	2	1	0
Access : POR	RW : 0000				RW : 0	RW : 0	RW : 0	RW : 0
Bit Name	KILL[3:0]				NPS	TC Pulse Width	Capture Int	Enable

This register is the Control register for a timer, if the DxCxxFN register is configured as a ‘000’.

Refer to the DxCxxDR0 register on page 131 for naming convention and digital row availability information. In the table, note that reserved bits are grayed table cells and are not described in the bit description section. Reserved bits should always be written with a value of ‘0’. For additional information, refer to the “Register Definitions” on page 348 in the Digital Blocks chapter.

Bit	Name	Description
7:4	**KILL[3:0]**	Select signal for kill function 0000b Low 0001b High 0010b BC 0011b VC3 0100b RI[0] 0101b RI[1] 0110b RI[2] 0111b RI[3] 1000b RO[0] 1001b RO[1] 1010b RO[2] 1011b RO[3] 1100b ACMP[0] 1101b ACMP[1] 1110b ACMP[2] 1111b ACMP[3]
3	**NPS**	Negative phase selection. The comparison output will be updated only when block clock is 0.
2	**TC Pulse Width**	Primary output 0 Terminal Count pulse width is one-half a block clock. Supports a period value of 00h. 1 Terminal Count pulse width is one full block clock.
1	**Capture Int**	0 Interrupt is selected with Mode bit 0 in the Function (DxCxxFN) register. 1 Block interrupt is caused by a hardware capture event (overrides Mode bit 0 selection).
0	**Enable**	0 Timer is not enabled. 1 Timer is enabled.

13.2.9 DxCxxCR0 (Counter Control:001)

Digital Basic/Communication Type C Block Control Register 0

Individual Register Names and Addresses:

DBC00CR0: 0,23h
DBC10CR0: 0,33h
DBC20CR0: 0,43h
DBC01CR0: 0,27h
DBC11CR0: 0,37h
DBC21CR0: 0,47h
DCC02CR0: 0,2Bh
DCC12CR0: 0,3Bh
DCC22CR0: 0,4Bh
DCC03CR0: 0,2Fh
DCC13CR0: 0,3Fh
DCC23CR0: 0,4Fh

	7	6	5	4	3	2	1	0
Access : POR	RW : 0000				RW : 0	RW : 0	RW : 0	RW : 0
Bit Name	KILL[3:0]				NPS		DR2BufEN	Enable

This register is the Control register for a counter, if the DxCxxFN register is configured as a ‘001’.

Refer to the DxCxxDR0 register on page 131 for naming convention and digital row availability information. In the table, note that reserved bits are grayed table cells and are not described in the bit description section. Reserved bits should always be written with a value of ‘0’. For additional information, refer to the “Register Definitions” on page 348 in the Digital Blocks chapter.

Bit	Name	Description	
7:4	**KILL[3:0]**	Same meaning as in Timer function.	
3	**NPS**	Same meaning as in Timer function.	
1	**DR2BufEn**	1	Enable DR2 update buffer; that is, update DR2 only at TC when function is running.
0	**Enable**	0	Counter is not enabled.
		1	Counter is enabled.

13.2.10 DxCxxCR0 (Dead Band Control:100)

Digital Basic/Communication Type C Block Control Register 0

Individual Register Names and Addresses:

DBC00CR0: 0,23h
DBC10CR0: 0,33h
DBC20CR0: 0,43h
DBC01CR0: 0,27h
DBC11CR0: 0,37h
DBC21CR0: 0,47h
DCC02CR0: 0,2Bh
DCC12CR0: 0,3Bh
DCC22CR0: 0,4Bh
DCC03CR0: 0,2Fh
DCC13CR0: 0,3Fh
DCC23CR0: 0,4Fh

	7	6	5	4	3	2	1	0
Access : POR						RW : 0	RW : 0	RW : 0
Bit Name						Bit Bang Clock	Bit Bang Mode	Enable

This register is the Control register for a dead band, if the DxCxxFN register is configured as ‘100’.

Refer to the DxCxxDR0 register on page 131 for naming convention and digital row availability information. In the table, note that reserved bits are grayed table cells and are not described in the bit description section. Reserved bits should always be written with a value of ‘0’. For additional information, refer to the “Register Definitions” on page 348 in the Digital Blocks chapter.

Bit	Name	Description	
2	**Bit Bang Clock**	When Bit Bang mode is enabled, the output of this register bit is substituted for the PWM reference. This register may be toggled by user firmware to generate PHI1 and PH2 output clocks with the programmed dead time.	
1	**Bit Bang Mode**	0	Dead Band Generator uses the previous block primary output as the input reference.
		1	Dead Band Generator uses the Bit Bang Clock register as the input reference.
0	**Enable**	0	Dead Band Generator is not enabled.
		1	Dead Band Generator is enabled.

13.2.11 DxCxxCR0 (CRCPRS Control:010)

Digital Basic/Communication Type C Block Control Register 0

Individual Register Names and Addresses:

DBC00CR0: 0,23h	DBC01CR0: 0,27h	DCC02CR0: 0,2Bh	DCC03CR0: 0,2Fh
DBC10CR0: 0,33h	DBC11CR0: 0,37h	DCC12CR0: 0,3Bh	DCC13CR0: 0,3Fh
DBC20CR0: 0,43h	DBC21CR0: 0,47h	DCC22CR0: 0,4Bh	DCC23CR0: 0,4Fh

	7	6	5	4	3	2	1	0
Access : POR	RW : 0000					RW : 0	RW : 0	RW : 0
Bit Name	KILL[3:0]					Shift Mode	Pass Mode	Enable

This register is the Control register for a CRCPRS, if the DxCxxFN register is configured as a ‘010’.

Refer to the DxCxxDR0 register on page 131 for naming convention and digital row availability information. In the table, note that reserved bits are grayed table cells and are not described in the bit description section. Reserved bits should always be written with a value of ‘0’. For additional information, refer to the “Register Definitions” on page 348 in the Digital Blocks chapter.

Bit	Name	Description
7:4	**KILL[3:0]**	Same as Timer function.
2	**Shift Mode**	Forces CRCPRS forward bus to zero to complete shift function. 0 Normal CRC/PRS operation 1 Shift register operation
1	**Pass Mode**	If selected, the DATA input selection is driven directly to the primary output and the block interrupt output. The CLK input selection is driven directly to the auxiliary output. 0 Normal CRC/PRS outputs. 1 Outputs are overridden.
0	**Enable**	0 CRC/PRS is not enabled. 1 CRC/PRS is enabled.

13.2.12 DxCxxCR0 (PWMDBL Control:011)

Digital Basic/Communication Type C Block Control Register 0

Individual Register Names and Addresses:

DBC00CR0: 0,23h	DBC01CR0: 0,27h	DCC02CR0: 0,2Bh	DCC03CR0: 0,2Fh
DBC10CR0: 0,33h	DBC11CR0: 0,37h	DCC12CR0: 0,3Bh	DCC13CR0: 0,3Fh
DBC20CR0: 0,43h	DBC21CR0: 0,47h	DCC22CR0: 0,4Bh	DCC23CR0: 0,4Fh

	7	6	5	4	3	2	1	0
Access : POR	RW : 0000				RW : 0	RW : 0	RW : 0	RW : 0
Bit Name	START[3:0]				NPS	KILL_INT	SWT	Enable

This register is the Control register for a PWMDBL, if the DxCxxFN register is configured as a '011'.

For additional information, refer to the "Register Definitions" on page 348 in the Digital Blocks chapter.

Bit	Name	Description
7:4	**START[3:0]**	PPG (programmable pulse generator) means the output pulse number is programmable. The pulse number at each trigger is specified by a 4 bit multi-shot value. When SWT is 0 in PPG mode: 0000b Low 0001b High 0010b BC 0011b VC3 0100b RI[0] 0101b RI[1] 0110b RI[2] 0111b RI[3] 1000b RO[0] 1001b RO[1] 1010b RO[2] 1011b RO[3] 1100b ACMP[0] 1101b ACMP[1] 1110b ACMP[2] 1111b ACMP[3] When the shot is ongoing, the new trigger (rising edge of 'START') has no effect. It will launch a new shot when START stays high at the end of the shot.
3	**NPS**	Negative Phase Select. 0 Disables negative phase select. No delay for compare output to become low. 1 Enable negative phase select. Compare output will delay one half cycle to become low. **Note** The PWMDBL function does not support NPS mode when integrated dead band function is enabled.
2	**KILL_INT**	0 KILL is not interrupt source. The interrupt follows the rising edge for primary output. 1 Set to select KILL as interrupt; it has highest priority.

(continued on next page)

13.2.12 DxCxxCR0 (PWMDBL Control:011) *(continued)*

1 SWT

0 Disables software trigger mode.
1 Enables software trigger mode.
If SWT is set to ‘1’, writing Enable (bit 0) to ‘1’ software will start PPG mode. If SWT is cleared to ‘0’, PWMDBL will wait for the rising edge of START to trigger PPG.

0 Enable

0 Disables PWMDBL function.
1 Enables PWMDBL function.
The primary digital block output is a comparison output (< or <=); the auxiliary digital block output is the reversed version. They support dead band.

13.2.13 DCCxxCR0 (SPIM Control:0-110)

Digital Communication Type C Block Control Register 0

Individual Register Names and Addresses:

DCC02CR0: 0,2Bh DCC03CR0: 0,2Fh DCC12CR0: 0,3Bh DCC13CR0: 0,3Fh
DCC22CR0: 0,4Bh DCC23CR0: 0,4Fh

	7	6	5	4	3	2	1	0
Access : POR	RW : 0	R : 0	R : 0	R : 1	R : 0	RW : 0	RW : 0	RW : 0
Bit Name	LSb First	Overrun	SPI Complete	TX Reg Empty	RX Reg Full	Clock Phase	Clock Polarity	Enable

This register is the Control register for a SPIM, if the DxCxxFN register is configured as a '110'.

The LSb First, Clock Phase, and Clock Polarity bits are configuration bits and should never be changed when the block is enabled. They can be set at the same time that the block is enabled. Refer to the DxCxxDR0 register on page 131 for naming convention and digital row availability information. For additional information, refer to the "Register Definitions" on page 348 in the Digital Blocks chapter.

Bit	Name	Description
7	**LSb First**	This bit should not be changed during an SPI transfer. 0 Data is shifted out MSb first. 1 Data is shifted out LSb first.
6	**Overrun**	0 No overrun has occurred. 1 Overrun has occurred. Indicates that a new byte is received and loaded into the RX Buffer before the previous one is read. It is cleared on a read of this (CR0) register.
5	**SPI Complete**	0 Indicates that a byte may still be in the process of shifting out, or no transmission is active. 1 Indicates that a byte is shifted out and all associated clocks are generated. It is cleared on a read of this (CR0) register. Optional interrupt.
4	**TX Reg Empty**	Reset state and the state when the block is disabled is '1'. 0 Indicates that a byte is currently buffered in the TX register. 1 Indicates that a byte is written to the TX register and cleared on write of the TX Buffer (DR1) register. This is the default interrupt. This status is initially asserted on block enable; however, the TX Reg Empty interrupt will occur only after the first data byte is written and transferred into the shifter.
3	**RX Reg Full**	0 RX register is empty. 1 A byte is received and loaded into the RX register. It is cleared on a read of the RX Buffer (DR2) register.
2	**Clock Phase**	0 Data is latched on the leading clock edge. Data changes on the trailing edge (Modes 0, 1). 1 Data changes on the leading clock edge. Data is latched on the trailing edge (Modes 2, 3).
1	**Clock Polarity**	0 Non-inverted, clock idles low (Modes 0, 2). 1 Inverted, clock idles high (Modes 1, 3).
0	**Enable**	0 SPI Master is not enabled. 1 SPI Master is enabled.

13.2.14 DCCxxCR0 (SPIS Control:1-110)

Digital Basic/Communication Type C Block Control Register 0

Individual Register Names and Addresses:

DCC02CR0: 0,2Bh DCC03CR0: 0,2Fh DCC12CR0: 0,3Bh DCC13CR0: 0,3Fh
DCC22CR0: 0,4Bh DCC23CR0: 0,4Fh

	7	6	5	4	3	2	1	0
Access : POR	RW : 0	R : 0	R : 0	R : 1	R : 0	RW : 0	RW : 0	RW : 0
Bit Name	LSb First	Overrun	SPI Complete	TX Reg Empty	RX Reg Full	Clock Phase	Clock Polarity	Enable

This register is the Control register for a SPIS, if the DxCxxFN register is configured as a ‘110’.

The LSb First, Clock Phase, and Clock Polarity bits are configuration bits and should never be changed when the block is enabled. They can be set at the same time that the block is enabled. Refer to the DxCxxDR0 register on page 131 for naming convention and digital row availability information. For additional information, refer to the “Register Definitions” on page 348 in the Digital Blocks chapter.

Bit	Name	Description
7	**LSb First**	This bit should not be changed during an SPI transfer. 0 Data is shifted out MSb first. 1 Data is shifted out LSb first.
6	**Overrun**	0 No overrun has occurred. 1 Overrun has occurred. Indicates that a new byte is received and loaded into the RX Buffer before the previous one is read. It is cleared on a read of this (CR0) register.
5	**SPI Complete**	0 Indicates that a byte may still be in the process of shifting out, or no transmission is active. 1 Indicates that a byte is shifted out and all associated clocks are generated. It is cleared on a read of this (CR0) register. Optional interrupt.
4	**TX Reg Empty**	Reset state and the state when the block is disabled is ‘1’. 0 Indicates that a byte is currently buffered in the TX register. 1 Indicates that a byte is written to the TX register and cleared on write of the TX Buffer (DR1) register. This is the default interrupt. This status is initially asserted on block enable; however, the TX Reg Empty interrupt will occur only after the first data byte is written and transferred into the shifter.
3	**RX Reg Full**	0 RX register is empty. 1 A byte is received and loaded into the RX register. It is cleared on a read of the RX Buffer (DR2) register.
2	**Clock Phase**	0 Data is latched on the leading clock edge. Data changes on the trailing edge (Modes 0, 1). 1 Data changes on the leading clock edge. Data is latched on the trailing edge (Modes 2, 3).
1	**Clock Polarity**	0 Non-inverted, clock idles low (Modes 0, 2). 1 Inverted, clock idles high (Modes 1, 3).
0	**Enable**	0 SPI Slave is not enabled. 1 SPI Slave is enabled.

13.2.15 DxCxxCR0 (DSM Control:111)

Digital Basic/Communication Type C Block Control Register 0

Individual Register Names and Addresses:

DBC00CR0: 0,23h	DBC01CR0: 0,27h	DCC02CR0: 0,2Bh	DCC03CR0: 0,2Fh
DBC10CR0: 0,33h	DBC11CR0: 0,37h	DCC12CR0: 0,3Bh	DCC13CR0: 0,3Fh
DBC20CR0: 0,43h	DBC21CR0: 0,47h	DCC22CR0: 0,4Bh	DCC23CR0: 0,4Fh

	7	6	5	4	3	2	1	0
Access : POR	RW : 0000							RW : 0
Bit Name	KILL_SEL[3:0]							Enable

This register is the Control register for a DSM, if the DxCxxFN register is configured as a '111'.

In the table, note that reserved bits are grayed table cells and are not described in the bit description section. Reserved bits should always be written with a value of '0'.For additional information, refer to the "Register Definitions" on page 348 in the Digital Blocks chapter.

Bit	Name	Description
7:4	**KILL_SEL[3:0]**	Used to select KILL signal source 0000b Low 0001b High 0010b BC 0011b VC3 0100b RI[0] 0101b RI[1] 0110b RI[2] 0111b RI[3] 1000b RO[0] 1001b RO[1] 1010b RO[2] 1011b RO[3] 1100b ACMP[0] 1101b ACMP[1] 1110b ACMP[2] 1111b ACMP[3]
0	**Enable**	0 Enables DSM function. When enabled, the DSM starts working. 1 Disables DSM function. When disabled, DSM output is low and it stops working.

13.2.16 DCCxxCR0 (UART Transmitter Control)

Digital Basic/Communication Type C Block Control Register 0

Individual Register Names and Addresses:

DCC02CR0: 0,2Bh DCC03CR0: 0,2Fh DCC12CR0: 0,3Bh DCC13CR0: 0,3Fh
DCC22CR0: 0,4Bh DCC23CR0: 0,4Fh

	7	6	5	4	3	2	1	0
Access : POR			R : 0	R : 1		RW : 0	RW : 0	RW : 0
Bit Name			TX Complete	TX Reg Empty		Parity Type	Parity Enable	Enable

This register is the Control register for a UART transmitter, if the DxCxxFN register is configured as a ‘101’.

Refer to the DxCxxDR0 register on page 131 for naming convention and digital row availability information. In the table, note that reserved bits are grayed table cells and are not described in the bit description section. Reserved bits should always be written with a value of ‘0’. For additional information, refer to the “Register Definitions” on page 348 in the Digital Blocks chapter. For the Receive mode definition, refer to DCCxxCR0 (UART Receiver Control) register on page 144.

Bit	Name	Description
5	**TX Complete**	0 Indicates that a byte may still be in the process of shifting out. 1 Indicates that a byte is shifted out and all associated framing bits are generated. Optional interrupt. Cleared on a read of this (CR0) register.
4	**TX Reg Empty**	Reset state and the state when the block is disabled is ‘1’. 0 Indicates that a byte is currently buffered in the TX register. 1 Indicates that a byte is written to the TX register and cleared on write of the TX Buffer register. This is the default interrupt. TX Reg Empty interrupt will occur only after the first data byte is written and transferred into the shifter.
2	**Parity Type**	0 Even parity 1 Odd parity
1	**Parity Enable**	0 Parity is not enabled. 1 Parity is enabled, frame includes parity bit.
0	**Enable**	0 Serial Transmitter is not enabled. 1 Serial Transmitter is enabled.

13.2.17 DCCxxCR0 (UART Receiver Control)

Digital Basic/Communication Type C Block Control Register 0

Individual Register Names and Addresses:

DCC02CR0: 0,2Bh DCC03CR0: 0,2Fh DCC12CR0: 0,3Bh DCC13CR0: 0,3Fh
DCC22CR0: 0,4Bh DCC23CR0: 0,4Fh

	7	6	5	4	3	2	1	0
Access : POR	R : 0	R : 0	R : 0	R : 0	R : 0	RW : 0	RW : 0	RW : 0
Bit Name	Parity Error	Overrun	Framing Error	RX Active	RX Reg Full	Parity Type	Parity Enable	Enable

This register is the Control register for a UART receiver, if the DxCxxFN register is configured as a '101'.

Refer to the DxCxxDR0 register on page 131 for naming convention and digital row availability information. For additional information, refer to the "Register Definitions" on page 348 in the Digital Blocks chapter. For the transmit mode definition, refer to section DCCxxCR0 (UART Transmitter Control) register on page 143.

Bit	Name		Description
7	**Parity Error**	0	Indicates that no parity error has occurred.
		1	Valid when RX Reg Full is set, indicating that a parity error has occurred in the received byte and cleared on a read of this (CR0) register.
6	**Overrun**	0	Indicates that no overrun has occurred.
		1	Valid when RX Reg Full is set, indicating that the byte in the RX Buffer register has not been read before the next byte is loaded. It is cleared on a read of this (CR0) register.
5	**Framing Error**	0	Indicates no framing error has occurred.
		1	Valid when RX Reg Full is set, indicating that a framing error has occurred (a logic 0 was sampled at the STOP bit, instead of the expected logic 1). It is cleared on a read of this (CR0) register.
4	**RX Active**	0	Indicates that no reception is in progress.
		1	Indicates that a reception is in progress. It is set by the detection of a START bit and cleared at the ***sampling*** of the STOP bit.
3	**RX Reg Full**	0	Indicates that the RX Buffer register is empty.
		1	Indicates that a byte is received and transferred to the RX Buffer (DR2) register. This bit is cleared when the RX Buffer register (DR2) is read by the CPU. Interrupt source.
2	**Parity Type**	0	Even parity
		1	Odd parity
1	**Parity Enable**	0	Parity is not enabled.
		1	Parity is enabled, frame includes parity bit.
0	**Enable**	0	Serial Receiver is not enabled.
		1	Serial Receiver is enabled.

13.2.18 AMX_IN

Analog Input Select Register

Individual Register Names and Addresses:

AMX_IN: 0,60h

	7	6	5	4	3	2	1	0
Access : POR	RW : 0		RW : 0		RW : 0		RW : 0	
Bit Name	ACI3[1:0]		ACI2[1:0]		ACI1[1:0]		ACI0[1:0]	

This register controls the analog muxes that feed signals in from port pins into the analog column.

For additional information, refer to the "Register Definitions" on page 419 in the Analog Input Configuration chapter.

Bits	Name	Description
7:6	**ACI3[1:0]**	Selects the Analog Column Mux 3. 00b ACM3 P0[0] 01b ACM3 P0[2] 10b ACM3 P0[4] 11b ACM3 P0[6]
5:4	**ACI2[1:0]**	Selects the Analog Column Mux 2. 00b ACM2 P0[1] 01b ACM2 P0[3] 10b ACM2 P0[5] 11b ACM2 P0[7]
3:2	**ACI1[1:0]**	Selects the Analog Column Mux 1. For 1 column, these are even inputs. 00b ACM1 P0[0] 01b ACM1 P0[2] 10b ACM1 P0[4] 11b ACM1 P0[6]
1:0	**ACI0[1:0]**	Selects the Analog Column Mux 0. For 1 column, these are odd inputs. 00b ACM0 P0[1] 01b ACM0 P0[3] 10b ACM0 P0[5] 11b ACM0 P0[7]

13.2.19 AMUX_CFG

Analog Mux Configuration Register

Individual Register Names and Addresses:

AMUX_CFG : 0,61h

	7	6	5	4	3	2	1	0
Access : POR	RW : 0	RW : 0	RW : 0		RW : 0			RW : 0
Bit Name	ABusMux1	ABusMux0	INTCAP[1:0]		MUXCLK0[2:0]			EN0

This register is used to configure the clocked pre-charge mode of the analog multiplexer system. **Note** The analog mux bus is not available in the CY8C28x03 and CY8C28x33.

For additional information, refer to the "Register Definitions" on page 528 in the I/O Analog Multiplexer chapter.

Bits	Name	Description
7	**ABusMux1**	0 Set column 1 input to column 1 mux output (selects among P0[6,4,2,0]) 1 Set column 1 input to the analog mux bus. If the bus is configured as two nets, the analog mux bus right net connects to column 1.
6	**ABusMux0**	0 Set column 0 input to column 0 mux output (selects among P0[7,5,3,1]). 1 Set column 0 input to the analog mux bus. If the bus is configured as two nets, the analog mux bus left net connects to column 0.
5:4	**INTCAP[1:0]**	Selects pins for static operation, even when the precharge clock is selected with MUXCLKx[2:0]. 00b Both P0[7] and P0[5] are in normal precharge configuration. 01b P0[5] pin selected for static mode only. 10b P0[7] pin selected for static mode only. 11b Both P0[7] and P0[5] are selected for static mode only.
3:1	**MUXCLK0[2:0]**	Selects a precharge clock source for analog mux bus left (AMuxBus0) connections. It can be suppressed by bit 4 in the AMUX_CLK register. 000b Precharge clock is off, no switching. 001b VC1 010b VC2 011b Row0 Broadcast 100b Analog column 0clock* 101b Analog column 2 clock* 110b Analog column 4 clock 111b Reserved * The analog column clock selection is a 1x version of the clock, such as before the divide by four.
0	**EN**0	0 Disable MUXCLK output 1 Enable MUXCLK output

13.2.20 CLK_CR3

Analog Clock Source Control Register 3

Individual Register Names and Addresses:

CLK_CR3: 0,62h

	7	6	5	4	3	2	1	0
Access : POR					RW : 0			
Bit Name					SYSDIR[3:0]			

The Analog Clock Source Control Register 3 (CLK_CR3) is used to select the clock source for an individual analog column.

In the table, note that reserved bits are grayed table cells and are not described in the bit description section. Reserved bits should always be written with a value of '0'. For additional information, see "Register Definitions" on page 400 in the Analog Interface chapter.

Bits	Name	Description	
3:0	**SYSDIR[3:0]**	0	Associated ACC column's clock source is determined by setting of CLK_CR0.
		1	Associated ACC column's clock source is SYSCLK.

13.2.21 ARF_CR

Analog Reference Control Register

Individual Register Names and Addresses:

ARF_CR: 0,63h

	7	6	5	4	3	2	1	0
Access : POR		RW : 0	RW : 0			RW : 0		
Bit Name		HBE	REF[2:0]			PWR[2:0]		

This register is used to configure various features of the configurable analog references.

In the table, note that the reserved bit is a gray table cell and is not described in the bit description section. Reserved bits should always be written with a value of '0'. For additional information, see "Register Definitions" on page 422 in the Analog Reference chapter.

Bits	Name	Description
6	**HBE**	Bias level control for opamps. 0 Low bias mode for analog array 1 High bias mode for analog array
5:3	**REF[2:0]**	Analog Array Reference Control (values with respect to Vss). These three bits select the sources for analog ***ground*** (AGND), the high reference (RefHi), and the low reference (RefLo). The following table applies to 4 and 2 column PSoC devices:

	AGND	RefHi	RefLo
000b	Vdd/2	Vdd/2 + Bandgap	Vdd/2 – Bandgap
001b	P2[4]	P2[4] + P2[6]	P2[4] – P2[6]
010b	Vdd/2	Vdd/2 + Vdd/2	Vdd/2 – Vdd/2
011b	2 *x* Bandgap	2 *x* Bandgap + Bandgap	2 *x* Bandgap – Bandgap
100b	2 *x* Bandgap	2 *x* Bandgap + P2[6]	2 *x* Bandgap – P2[6]
101b	P2[4]	P2[4] + Bandgap	P2[4] – Bandgap
110b	Bandgap	Bandgap + Bandgap	Bandgap – Bandgap
111b	1.6 *x* Bandgap	1.6 *x* Bandgap + 1.6 *x* Bandgap	1.6 *x* Bandgap – 1.6 *x* Bandgap

Bits	Name	Description
2:0	**PWR[2:0]**	Analog Array Power Control

	Reference	CT Block	SC Blocks
000b	Off	Off	Off
001b	Low	On	Off
010b	Medium	On	Off
011b	High	On	Off
100b	Off	Off	Off
101b	Low	On	On
110b	Medium	On	On
111b	High	On	On

13.2.22 CMP_CR0

Analog Comparator Bus Control Register 0

Individual Register Names and Addresses:

CMP_CR0: 0,64h

	7	6	5	4	3	2	1	0
Access : POR	R : 0				RW : 0			
Bit Name	COMP[3:0]				AINT[3:0]			

This register is used to poll the analog column comparator bus states and select column interrupts. For additional information, see “Register Definitions” on page 400 in the Analog Interface chapter.

Bits	Name	Description
7	**COMP[3]**	Comparator bus state for column 3. This bit is updated on the ***rising edge*** of PHI2, unless the ***comparator*** latch disable bits are set (refer to the CLDISx bits in the CMP_CR1 register). If the comparator latch disable bits are set, then this bit is transparent to the comparator bus in the analog array.
6	**COMP[2]**	Comparator bus state for column 2. This bit is updated on the rising edge of PHI2, unless the comparator latch disable bits are set (refer to the CLDISx bits in the CMP_CR1 register). If the comparator latch disable bits are set, then this bit is transparent to the comparator bus in the analog array.
5	**COMP[1]**	Comparator bus state for column 1. This bit is updated on the rising edge of PHI2, unless the comparator latch disable bits are set (refer to the CLDISx bits in the CMP_CR1 register). If the comparator latch disable bits are set, then this bit is transparent to the comparator bus in the analog array.
4	**COMP[0]**	Comparator bus state for column 0. This bit is updated on the rising edge of PHI2, unless the comparator latch disable bits are set (refer to the CLDISx bits in the CMP_CR1 register). If the comparator latch disable bits are set, then this bit is transparent to the comparator bus in the analog array.
3	**AINT[3]**	Controls the selection of the analog comparator interrupt for column 3. 0 The comparator data bit from the column is the input to the interrupt controller. 1 The ***falling edge*** of PHI2 for the column is the input to the interrupt controller.
2	**AINT[2]**	Controls the selection of the analog comparator interrupt for column 2. 0 The comparator data bit from the column is the input to the interrupt controller. 1 The falling edge of PHI2 for the column is the input to the interrupt controller.
1	**AINT[1]**	Controls the selection of the analog comparator interrupt for column 1. 0 The comparator data bit from the column is the input to the interrupt controller. 1 The falling edge of PHI2 for the column is the input to the interrupt controller. In 2 column limited analog PSoC devices, this bit selects the terminal count for the dedicated incremental PWM as the interrupt source.
0	**AINT[0]**	Controls the selection of the analog comparator interrupt for column 0. 0 The comparator data bit from the column is the input to the interrupt controller. 1 The falling edge of PHI2 for the column is the input to the interrupt controller. In 2 column limited analog PSoC devices, this bit selects the terminal count for the dedicated incremental PWM as the interrupt source.

13.2.23 ASY_CR

Analog Synchronization Control Register

Individual Register Names and Addresses:

ASY_CR: 0,65h

4, 2 COLUMN	7	6	5	4	3	2	1	0
Access : POR		W : 0			RW : 0	RW : 0		RW : 0
Bit Name		SARCNT[2:0]			SARSIGN	SARCOL[1:0]		SYNCEN

This register is used to control SAR operation, except for the SYNCEN bit which is associated with analog register write stalling. **Note** This does not refer to the dedicated SAR10 ADC

Note that reserved bits are grayed table cells and are not described in the bit description section. Reserved bits should always be written with a value of '0'. For additional information, see "Register Definitions" on page 400 in the Analog Interface chapter.

Bits	Name	Description
6:4	**SARCNT[2:0]**	Initial SAR count. This field is initialized to the number of SAR bits to process. **Note** Any write to the SARCNT bits, other than '0', will result in a modification of the read back of any analog register in the analog array. These bits must always be zero, except for SAR processing.
3	**SARSIGN**	This bit adjusts the SAR comparator based on the type of block addressed. In a DAC configuration with more than one analog block (more than 6 bits), this bit should be set to '0' when processing the most significant block. It should be set to '1' when processing the least significant block., because the least significant block is an inverting input to the most significant block.
2:1	**SARCOL[1:0]**	The selected column corresponds with the position of the SAR comparator block. Note that the comparator and DAC can be in the same block. 00b Analog Column 0 is the source for SAR comparator. 01b Analog Column 1 is the source for SAR comparator. 10b Analog Column 2 is the source for SAR comparator. 11b Analog Column 3 is the source for SAR comparator.
0	**SYNCEN**	Set to '1', will stall the CPU until the rising edge of PHI1, if a write to a register within an analog Switch Cap block takes place. 0 CPU stalling disabled. 1 CPU stalling enabled.

13.2.24 CMP_CR1

Analog Comparator Bus Control Register 1

Individual Register Names and Addresses:

CMP_CR1: 0,66h

4 COLUMN	7	6	5	4	3	2	1	0
Access : POR	RW : 0	RW : 0	RW : 0	RW : 0	RW : 0	RW : 0	RW : 0	RW : 0
Bit Name	CLDIS[3]	CLDIS[2]	CLDIS[1]	CLDIS[0]	CLK1X[3]	CLK1X[2]	CLK1X[1]	CLK1X[0]

This register is used to override the analog column comparator synchronization, or select direct column clock synchronization.

By default, the analog comparator bus is synchronized by the column clock and driven to the digital comparator bus for use in the digital array and the interrupt controller. The CLDIS bits are used to bypass the synchronization. This bypass mode can be used in power down operation to wake the device out of sleep, as a result of an analog column interrupt. Most devices update the comparator bus on the rising edge of PHI2. The CY8C28xxx PSoC devices have the option to synchronize using PHI2 or, when the CLK1X bits are set for a given column, 1X rising edge column clock sync is enabled. For additional information, see “Register Definitions” on page 400 in the Analog Interface chapter.

Bits	Name	Description
7	**CLDIS[3]**	Controls the comparator output latch, column 3. 0 Comparator bus synchronization is enabled. 1 Comparator bus synchronization is disabled.
6	**CLDIS[2]**	Controls the comparator output latch, column 2. 0 Comparator bus synchronization is enabled. 1 Comparator bus synchronization is disabled.
5	**CLDIS[1]**	Controls the comparator output latch, column 1. 0 Comparator bus synchronization is enabled. 1 Comparator bus synchronization is disabled.
4	**CLDIS[0]**	Controls the comparator output latch, column 0. 0 Comparator bus synchronization is enabled. 1 Comparator bus synchronization is disabled.
3	**CLK1X[3]**	Controls the digital comparator bus 3 synchronization clock. 0 Comparator bit is synchronized by rising edge of PHI2. 1 Comparator bit is synchronized directly by selected column clock. (This clock is not divided by 4.)
2	**CLK1X[2]**	Controls the digital comparator bus 2 synchronization clock. 0 Comparator bit is synchronized by rising edge of PHI2. 1 Comparator bit is synchronized directly by selected column clock. (This clock is not divided by 4.)
1	**CLK1X[1]**	Controls the digital comparator bus 1 synchronization clock. 0 Comparator bit is synchronized by rising edge of PHI2. 1 Comparator bit is synchronized directly by selected column clock. (This clock is not divided by 4.)

(continued on next page)

13.2.24 CMP_CR1 *(continued)*

0	**CLK1X[0]**	Controls the digital comparator bus 0 synchronization clock. 0 Comparator bit is synchronized by rising edge of PHI2. 1 Comparator bit is synchronized directly by selected column clock. (This clock is not divided by 4.)

13.2.25 SADC_DH

SAR ADC Data High Register

Individual Register Names and Addresses:

SADC_DH : 0,6Ah

	7	6	5	4	3	2	1	0
Access : POR	R : 00							
Bit Name	Data High [7:0]							

The 10-bit SAR ADC controller only exists in the CY8C28x03, CY8C28x13, CY8C28x33, CY8C28x43, and CY8C28x45 PSoC devices. This register is not used for the CY8C28x23 and CY8C28x52 devices. For additional information, see “Register Definitions” on page 541 in the 10-Bit SAR ADC Controller chapter.

Bit	Name	Description
7:0	Data High [7:0]	The high byte of ADC data. Only the two least significant bits are valid when in right-justified mode. The ADC can be treated as an 8-bit ADC if you only read this byte of ADC data in left-justified mode.

13.2.26 SADC_DL

SAR ADC Data Low Register

Individual Register Names and Addresses:

SADC_DL : 0,6Bh

	7	6	5	4	3	2	1	0
Access : POR	R : 00							
Bit Name	Data Low [7:0]							

The 10-bit SAR ADC controller only exists in the CY8C28x03, CY8C28x13, CY8C28x33, CY8C28x43, and CY8C28x45 PSoC devices. This register is not used for the CY8C28x23 and CY8C28x52 devices. For additional information, see “Register Definitions” on page 541 in the 10-Bit SAR ADC Controller chapter.

Bit	Name	Description
7:0	Data Low [7:0]	The low byte of ADC data. It contains the least significant 8 bits of the 10-bit sample in right-justified data format. In left-justified data format only the bits [1:0] are valid to hold the least significant 2 bits of the 10-bit sample.

13.2.27 TMP_DRx

Temporary Data Register

Individual Register Names and Addresses:

TMP_DR0 : x,6Ch TMP_DR1 : x,6Dh TMP_DR2 : x,6Eh TMP_DR3 : x,6Fh

	7	6	5	4	3	2	1	0
Access : POR	RW : 00							
Bit Name	Data[7:0]							

This register is used to enhance the performance in multiple SRAM page PSoC devices.

For additional information, refer to the “Register Definitions” on page 60 in the RAM Paging chapter.

Bit	Name	Description
7:0	**Data[7:0]**	General purpose register space.

13.2.28 ACCxxCR3

Analog Continuous Time Type C Block Control Register 3

Individual Register Names and Addresses:

ACC00CR3 : 0,70h ACC01CR3 : 0,74h ACC02CR3 : 0,78h ACC03CR3 : 0,7Ch

	7	6	5	4	3	2	1	0
Access : POR			RW : 0	RW : 0	RW : 0	RW : 0	RW : 0	RW : 0
Bit Name			AGND_PD	RTopMux1	LPCMPEN	CMOUT	INSAMP	EXGAIN

This register is one of four registers used to configure a type C continuous time PSoC block.

The register naming convention for arrays of PSoC blocks and their registers is <Prefix>mn<Suffix>, where m = row index, n=column index; therefore, ACC01CR3 is a register for an analog PSoC block in row 0 column 1. In the table, note that reserved bits are grayed table cells and are not described in the bit description section. Reserved bits should always be written with a value of '0'. For additional information, refer to the "Register Definitions" on page 426 in the Continuous Time Block chapter.

Bits	Name	Description
5	**AGND_PD**	Used to power down AGND buffer in CT block. 0 AGND buffer in CT block enabled 1 AGND buffer in CT block disabled
4	**RTopMux1**	0 RTop to Vdd or opamp's output depending on ACCxxCR0 bit 2. 1 RTop to RefHi.
3	**LPCMPEN**	0 Low power comparator is disabled. 1 Low power comparator is enabled.
2	**CMOUT**	0 No connection to column output. 1 Connect Common mode to column output.
1	**INSAMP**	0 Normal mode 1 Connect amplifiers across column to form an Instrumentation Amp.
0	**EXGAIN**	0 Standard Gain mode 1 High Gain mode (see the ACCxxCR0 register on page 157.)

13.2.29 ACCxxCR0

Analog Continuous Time Type C Block Control Register 0

Individual Register Names and Addresses:

ACC00CR0 : 0,71h ACC01CR0 : 0,75h ACC02CR0 : 0,79h ACC03CR0 : 0,7Dh

	7	6	5	4	3	2	1	0
Access : POR	RW : 0				RW : 0	RW : 0	RW : 0	
Bit Name	RTapMux[3:0]				Gain	RTopMux	RBotMux[1:0]	

This register is one of four registers used to configure a type C continuous time PSoC block.

The register naming convention for arrays of PSoC blocks and their registers is <Prefix>mn<Suffix>, where m = row index, n = column index; therefore, ACC01CR0 is a register for an analog PSoC block in row 0 column 1. For additional information, refer to the "Register Definitions" on page 426 in the Continuous Time Block chapter.

Bits 7:4 — RTapMux[3:0]

Encoding for selecting one of 18 resistor taps. The four bits of RTapMux[3:0] allow selection of 16 taps. The two additional ***tap*** selections are provided using ACCxxCR3 bit 0, EXGAIN. The EXGAIN bit only affects the RTapMux values 0000b and 0001b.

RTap	EXGAIN	Rf	Ri	Loss	Gain
0000b	1	47	1	0.0208	48.000
0001b	1	46	2	0.0417	24.000
0000b	0	45	3	0.0625	16.000
0001b	0	42	6	0.1250	8.000
0010b	0	39	9	0.1875	5.333
0011b	0	36	12	0.2500	4.000
0100b	0	33	15	0.3125	3.200
0101b	0	30	18	0.3750	2.667
0110b	0	27	21	0.4375	2.286
0111b	0	24	24	0.5000	2.000
1000b	0	21	27	0.5625	1.778
1001b	0	18	30	0.6250	1.600
1010b	0	15	33	0.6875	1.455
1011b	0	12	36	0.7500	1.333
1100b	0	9	39	0.8125	1.231
1101b	0	6	42	0.8750	1.143
1110b	0	3	45	0.9375	1.067
1111b	0	0	48	1.0000	1.000

Bit 3 — Gain

Select gain or loss configuration for output tap.

0 Loss
1 Gain

Bit 2 — RTopMux

Encoding for feedback resistor select.

0 RTop to Vdd
1 RTop to opamp's output

(continued on next page)

13.2.29 ACCxxCR0 *(continued)*

1:0 RBotMux[1:0]

Encoding for feedback resistor select. Bits [1:0] are overridden if bit 1 of the ACCxxCR3 register is set. In that case, the bottom of the resistor string is connected across columns. Note that available mux inputs vary by individual PSoC block. In the following table, only columns ACC00 and ACC01 are used by the 2 column analog PSoC blocks and all columns are used by the 4 column analog PSoC blocks.

	ACC00	**ACC01**	**ACC02**	**ACC03**
00b	AC**C**01	AC**C**00	AC**C**03	AC**C**02
01b	AGND	AGND	AGND	AGND
10b	Vss	Vss	Vss	Vss
11b	ASC10	ASD11	ASC12	ASD13

13.2.30 ACCxxCR1

Analog Continuous Time Type C Block Control Register 1

Individual Register Names and Addresses:

ACC00CR1 : 0,72h ACC01CR1 : 0,76h ACC02CR1 : 0,7Ah ACC03CR1 : 0,7Eh

	7	6	5	4	3	2	1	0
Access : POR	RW : 0	RW : 0	RW : 0			RW : 0		
Bit Name	AnalogBus	CompBus	NMux[2:0]			PMux[2:0]		

This register is one of four registers used to configure a type C continuous time PSoC block.

The register naming convention for arrays of PSoC blocks and their registers is <Prefix>mn<Suffix>, where m = row index, n = column index; therefore, ACC01CR1 is a register for an analog PSoC block in row 0 column 1. For additional information, refer to the "Register Definitions" on page 426 in the Continuous Time Block chapter.

Bits **Name** **Description**

7 **AnalogBus**

Enable output to the analog bus.
0 Disable output to analog column bus.
1 Enable output to analog column bus.

6 **CompBus**

Enable output to the comparator bus.
0 Disable output to comparator bus.
1 Enable output to comparator bus.

5:3 **NMux[2:0]**

Encoding for negative input select. Note that available mux inputs vary by individual PSoC block. In this table, only columns ACC00 and ACC01 are used by the 2 column analog PSoC blocks and all columns are used by the 4 column analog PSoC blocks.

	ACC00	**ACC01**	**ACC02**	**ACC03**
000b	ACC01	ACC00	ACC03	ACC02
001b	AGND	AGND	AGND	AGND
010b	RefLo	RefLo	RefLo	RefLo
011b	RefHi	RefHi	RefHi	RefHi
100b	FB#	FB#	FB#	FB#
101b	ASC10	ASD11	ASC12	ASD13
110b	ASD11	ASC10	ASD13	ASC12
111b	Port Inputs	Port Inputs	Port Inputs	Port Inputs

Feedback point from tap of the feedback resistor as defined by corresponding CR0 bits [7:4] and CR3 bit 0.

2:0 **PMux[2:0]**

Encoding for positive input select. Note that available mux inputs vary by individual PSoC block.

The following table is used by the 4 column analog PSoC blocks.

	ACC00	**ACC01**	**ACC02**	**ACC03**
000b	RefLo	ACC02	ACC01	RefLo
001b	Port Inputs	Port Inputs	Port Inputs	Port Inputs
010b	ACC01	ACC00	ACC03	ACC02
011b	AGND	AGND	AGND	AGND
100b	ASC10	ASD11	ASC12	ASD13
101b	ASD11	ASC10	ASD13	ASC12
110b	ABUS0	ABUS1	ABUS2	ABUS3
111b	FB#	FB#	FB#	FB#

Feedback point from tap of the feedback resistor as defined by corresponding CR0 bits [7:4] and CR3 bit 0.

13.2.31 ACCxxCR2

Analog Continuous Time Type C Block Control Register 2

Individual Register Names and Addresses:

ACC00CR2 : 0,73h ACC01CR2 : 0,77h ACC02CR2 : 0,7Bh ACC03CR2 : 0,7Fh

	7	6	5	4	3	2	1	0
Access : POR	RW : 0	RW : 0	RW : 0	RW : 0	RW : 0		RW : 0	
Bit Name	CPhase	CLatch	CompCap	TMUXEN	TestMux[1:0]		PWR[1:0]	

This register is one of four registers used to configure a type C continuous time PSoC block.

The register naming convention for arrays of PSoC blocks and their registers is <Prefix>mn<Suffix>, where m = row index, n = column index; therefore, ACC01CR2 is a register for an analog PSoC block in row 0 column 1. For additional information, refer to the "Register Definitions" on page 426 in the Continuous Time Block chapter.

Bits **Name** **Description**

7 **CPhase**
0 Comparator Control latch is transparent on PHI1.
1 Comparator Control latch is transparent on PHI2.

6 **CLatch**
0 Comparator Control latch is always transparent.
1 Comparator Control latch is active.

5 **CompCap**
0 Comparator Mode
1 Opamp Mode

4 **TMUXEN**
Test Mux
0 Disabled
1 Enabled

3:2 **TestMux[1:0]**
Select block bypass mode. Note that available mux inputs vary by individual PSoC block and TMUXEN must be set. In the following table, column ACC01 is used by the one column PSoC blocks, columns ACC00 and ACC01 are used by the 2 column PSoC blocks, and all columns are used by the 4 column PSoC blocks.

		ACC00	**ACC01**	**ACC02**	**ACC03**
00b	Positive Input to	ABUS0	ABUS1	ABUS2	ABUS3
01b	AGND to	ABUS0	ABUS1	ABUS2	ABUS3
10b	RefLo to	ABUS0	ABUS1	ABUS2	ABUS3
11b	RefHi to	ABUS0	ABUS1	ABUS2	ABUS3

1:0 **PWR[1:0]**
Encoding for selecting one of four power levels. High Bias mode doubles the power at each of these settings. See bit 6 in the ARF_CR register on page 148.
00b Off
01b Low
10b Medium
11b High

13.2.32 ASCxxCR0

Analog Switch Cap Type C Block Control Register 0

Individual Register Names and Addresses:

ASC10CR0 : 0,80h ASC12CR0 : 0,88h ASC21CR0 : 0,94h ASC23CR0 : 0,9Ch

	7	6	5	4	3	2	1	0
Access : POR	RW : 0	RW : 0	RW : 0	RW : 00				
Bit Name	FCap	ClockPhase	ASign	ACap[4:0]				

This register is one of four registers used to configure a type C switch capacitor PSoC block.

The register naming convention for arrays of PSoC blocks and their registers is <Prefix>mn<Suffix>, where m = row index, n = column index; therefore, ASC12CR0 is a register for an analog PSoC block in row 1 column 2. For additional information, refer to the "Register Definitions" on page 434 in the Switched Capacitor Block chapter.

Bits	Name	Description
7	**FCap**	F Capacitor value selection bit. 0 16 capacitor units 1 32 capacitor units
6	**ClockPhase**	The ClockPhase controls the clock phase of the comparator within the switched cap blocks, as well as the clock phase of the switches. 0 ***Switch phasing*** is Internal PHI1 = External PHI1. Comparator Capture Point Event is triggered by Falling PHI2 and Comparator Output Point Event is triggered by Rising PHI1. 1 Switch phasing is Internal PHI1 = External PHI2. Comparator Capture Point Event is triggered by Falling PHI1 and Comparator Output Point Event is triggered by Rising PHI2.
5	**ASign**	0 Input sampled on Internal PHI1. Reference Input sampled on Internal PHI2. Positive gain. 1 Input sampled on Internal PHI2. Reference Input sampled on Internal PHI1. Negative gain.
4:0	**ACap[4:0]**	Binary encoding for 32 possible capacitor sizes for capacitor ACap.

13.2.33 ASCxxCR1

Analog Switch Cap Type C Block Control Register 1

Individual Register Names and Addresses:

ASC10CR1 : 0,81h ASC12CR1 : 0,89h ASC21CR1 : 0,95h ASC23CR1 : 0,9Dh

	7	6	5	4	3	2	1	0
Access : POR	RW : 0			RW : 00				
Bit Name	ACMux[2:0]			BCap[4:0]				

This register is one of four registers used to configure a type C switch capacitor PSoC block.

The register naming convention for arrays of PSoC blocks and their registers is <Prefix>mn<Suffix>, where m=row index, n=column index; therefore, ASC12CR1 is a register for an analog PSoC block in row 1 column 2. For additional information, refer to the “Register Definitions” on page 434 in the Switched Capacitor Block chapter.

Bits	Name	Description
7:5	**ACMux[2:0]**	Encoding to select A and C inputs. (Note that available mux inputs vary by individual PSoC block.

For 4 Column Analog PSoC Blocks:

	ASC10		**ASC21**		**ASC12**		**ASC23**	
	A Inputs	*C Inputs*	*A Inputs*	*C Inputs*	*A Inputs*	*C Inputs*	*A Inputs*	*C Inputs*
000b	ACC00	ACC00	ASD11	ASD11	ACC02	ACC02	ASD13	ASD13
001b	ASD11	ACC00	ASD20	ASD11	ASD13	ACC02	ASD22	ASD13
010b	RefHi	ACC00	RefHi	ASD11	RefHi	ACC02	RefHi	ASD13
011b	ASD20	ACC00	Vtemp	ASD11	ASD22	ACC02	ABUS3	ASD13
100b	ACC01	ASD20	ASC10	ASD11	ACC03	ASD22	ASC12	ASD13
101b	ACC00	ASD20	ASD20	ASD11	ACC02	ASD22	ASD22	ASD13
110b	ASD11	ASD20	ABUS1	ASD11	ASD13	ASD22	ABUS3	ASD13
111b	P2[1]	ASD20	ASD22	ASD11	ASD11	ASD22	P2[2]	ASD13

4:0	**BCap[4:0]**	Binary encoding for 32 possible capacitor sizes of the capacitor BCap.

13.2.34 ASCxxCR2

Analog Switch Cap Type C Block Control Register 2

Individual Register Names and Addresses:

ASC10CR2 : 0,82h ASC12CR2 : 0,8Ah ASC21CR2 : 0,96h ASC23CR2 : 0,9Eh

	7	6	5	4	3	2	1	0
Access : POR	RW : 0	RW : 0	RW : 0	RW : 00				
Bit Name	AnalogBus	CompBus	AutoZero	CCap[4:0]				

This register is one of four registers used to configure a type C switch capacitor PSoC block.

The register naming convention for arrays of PSoC blocks and their registers is <Prefix>mn<Suffix>, where m = row index, n = column index; therefore, ASC12CR2 is a register for an analog PSoC block in row 1 column 2. For additional information, refer to the “Register Definitions” on page 434 in the Switched Capacitor Block chapter.

Bits	Name	Description
7	**AnalogBus**	Enable output to the analog bus. Note that ClockPhase in the ASCxxCR0 register on page 161, bit 6, also affects this bit: Sample + Hold mode is allowed only if ClockPhase = 0. 0 Disable output to analog column bus. 1 Enable output to analog column bus.
6	**CompBus**	Enable output to the comparator bus. 0 Disable output to comparator bus. 1 Enable output to comparator bus.
5	**AutoZero**	Bit for controlling gated switches. 0 Shorting switch is not active. Input cap branches shorted to opamp input. 1 Shorting switch is enabled during Internal PHI1. Input cap branches shorted to analog ground during Internal PHI1 and to opamp input during Internal PHI2.
4:0	**CCap[4:0]**	Binary encoding for 32 possible capacitor sizes of the capacitor CCap.

13.2.35 ASCxxCR3

Analog Switch Cap Type C Block Control Register 3

Individual Register Names and Addresses:

ASC10CR3 : 0,83h ASC12CR3 : 0,8Bh ASC21CR3 : 0,97h ASC23CR3 : 0,9Fh

	7	6	5	4	3	2	1	0
Access : POR	RW : 0		RW : 0	RW : 0	RW : 0		RW : 0	
Bit Name	ARefMux[1:0]		FSW1	FSW0	BMuxSC[1:0]		PWR[1:0]	

This register is one of four registers used to configure a type C switch capacitor PSoC block.

The register naming convention for arrays of PSoC blocks and their registers is <Prefix>mn<Suffix>, where m = row index, n = column index; therefore, ASC12CR3 is a register for an analog PSoC block in row 1 column 2. For additional information, refer to the “Register Definitions” on page 434 in the Switched Capacitor Block chapter.

Bits	Name	Description
7:6	**ARefMux[1:0]**	Encoding for selecting reference input. 00b Analog ground is selected. 01b RefHi input selected. 10b RefLo input selected. 11b Reference selection is driven by the comparator. (When output comparator node is set high, the input is set to RefHi. When set low, the input is set to RefLo.)
5	**FSW1**	Bit for controlling the FSW1 switch. 0 Switch is disabled. 1 If the FSW1 bit is set to ‘1’, the state of the switch is determined by the AutoZero bit. If the AutoZero bit is ‘0’, the switch is enabled at all times. If the AutoZero bit is ‘1’, the switch is enabled only when the Internal PHI2 is high.
4	**FSW0**	Bit for controlling the FSW0 switch. 0 Switch is disabled. 1 Switch is enabled when PHI1 is high.
3:2	**BMuxSC[1:0]**	Encoding for selecting B inputs. Note that the available mux inputs vary by individual PSoC block. For 4 Column Analog PSoC Blocks: **ASC10 ASC21 ASC12 ASC23** 00b ACC00 ASD11 ACC02 ASD13 01b ASD11 ASD20 ASD13 ASD22 10b P2[3] ASD22 ASD11 P2[0] 11b ASD20 TrefGND ASD22 ABUS3
1:0	**PWR[1:0]**	Encoding for selecting one of four power levels. 00b Off 10b Medium 01b Low 11b High

13.2.36 ASDxxCR0

Analog Switch Cap Type D Block Control Register 0

Individual Register Names and Addresses:

ASD11CR0 : 0,84h ASD13CR0 : 0,8Ch ASD20CR0 : 0,90h ASD22CR0 : 0,98h

	7	6	5	4	3	2	1	0
Access : POR	RW : 0	RW : 0	RW : 0	RW : 00				
Bit Name	FCap	ClockPhase	ASign	ACap[4:0]				

This register is one of four registers used to configure a type D switch capacitor PSoC block.

The register naming convention for arrays of PSoC blocks and their registers is <Prefix>mn<Suffix>, where m=row index, n=column index; therefore, ASD13CR0 is a register for an analog PSoC block in row 1 column 3. For additional information, refer to the “Register Definitions” on page 434 in the Switched Capacitor Block chapter.

Bits	Name	Description
7	**FCap**	F Capacitor value selection bit. 0 16 capacitor units 1 32 capacitor units
6	**ClockPhase**	The ClockPhase controls the clock phase of the comparator within the switched cap blocks, as well as the clock phase of the switches. 0 ***Switch phasing*** is Internal PHI1 = External PHI1. Comparator Capture Point Event is triggered by Falling PHI2 and Comparator Output Point Event is triggered by Rising PHI1. 1 Switch phasing is Internal PHI1 = External PHI2. Comparator Capture Point Event is triggered by Falling PHI1 and Comparator Output Point Event is triggered by Rising PHI2.
5	**ASign**	0 Input sampled on Internal PHI1. Reference Input sampled on Internal PHI2. Positive gain. 1 Input sampled on Internal PHI2. Reference Input sampled on Internal PHI1. Negative gain.
4:0	**ACap[4:0]**	Binary encoding for 32 possible capacitor sizes for capacitor ACap.

13.2.37 ASDxxCR1

Analog Switch Cap Type D Block Control Register 1

Individual Register Names and Addresses:

ASD11CR1 : 0,85h ASD13CR1 : 0,8Dh ASD20CR1 : 0,91h ASD22CR1 : 0,99h

	7	6	5	4	3	2	1	0
Access : POR	RW : 0			RW : 00				
Bit Name	AMux[2:0]			BCap[4:0]				

This register is one of four registers used to configure a type D switch capacitor PSoC block.

The register naming convention for arrays of PSoC blocks and their registers is <Prefix>mn<Suffix>, where m = row index, n = column index; therefore, ASD13CR1 is a register for an analog PSoC block in row 1 column 3. For additional information, refer to the “Register Definitions” on page 434 in the Switched Capacitor Block chapter.

Bits	Name	Description
7:5	**AMux[2:0]**	Encoding for selecting A and C inputs for C Type blocks and A inputs for D Type blocks. (Note that available mux inputs vary by individual PSoC block.)
4:0	**BCap[4:0]**	Binary encoding for 32 possible capacitor sizes for capacitor BCap.

	ASD20	**ASD11**	**ASD22**	**ASD13**
000b	ASC10	ACC01	ASC12	ACC03
001b	P2[1]	ASC12	ASC21	P2[2]
010b	ASC21	ASC10	ASC23	ASC12
011b	ABUS0	ASC21	ABUS2	ASC23
100b	RefHi	RefHi	RefHi	RefHi
101b	ASD11	ACC00	ASD13	ACC02
110b	Reserved	Reserved	Reserved	Reserved
111b	Reserved	Reserved	Reserved	Reserved

13.2.38 ASDxxCR2

Analog Switch Cap Type D Block Control Register 2

Individual Register Names and Addresses:

ASD11CR2 : 0,86h ASD13CR2 : 0,8Eh ASD20CR2 : 0,92h ASD22CR2 : 0,9Ah

	7	6	5	4	3	2	1	0
Access : POR	RW : 0	RW : 0	RW : 0	RW : 00				
Bit Name	AnalogBus	CompBus	AutoZero	CCap[4:0]				

This register is one of four registers used to configure a type D switch capacitor PSoC block.

The register naming convention for arrays of PSoC blocks and their registers is <Prefix>mn<Suffix>, where m = row index, n = column index; therefore, ASD13CR2 is a register for an analog PSoC block in row 1 column 3. For additional information, refer to the “Register Definitions” on page 434 in the Switched Capacitor Block chapter.

Bits	Name	Description
7	**AnalogBus**	Enable output to the analog bus. Note that ClockPhase in ASDxxCR0 register, bit 6, also affect this bit: Sample + Hold mode is allowed only if ClockPhase = 0. 0 Disable output to analog column bus. 1 Enable output to analog column bus.
6	**CompBus**	Enable output to the comparator bus. 0 Disable output to comparator bus. 1 Enable output to comparator bus.
5	**AutoZero**	Bit for controlling the AutoZero switch. 0 Shorting switch is not active. Input cap branches shorted to opamp input. 1 Shorting switch is enabled during Internal PHI1. Input cap branches shorted to analog ground during Internal PHI1 and to opamp input during Internal PHI2.
4:0	**CCap[4:0]**	Binary encoding for 32 possible capacitor sizes for capacitor CCap.

13.2.39 ASDxxCR3

Analog Switch Cap Type D Block Control Register 3

Individual Register Names and Addresses:

ASD11CR3 : 0,87h ASD13CR3 : 0,8Fh ASD20CR3 : 0,93h ASD22CR3 : 0,9Bh

	7	6	5	4	3	2	1	0
Access : POR	RW : 0		RW : 0	RW : 0	RW : 0	RW : 0	RW : 0	
Bit Name	ARefMux[1:0]		FSW1	FSW0	BSW	BMuxSD	PWR[1:0]	

This register is one of four registers used to configure a type D switch capacitor PSoC block.

The register naming convention for arrays of PSoC blocks and their registers is <Prefix>mn<Suffix>, where m = row index, n = column index; therefore, ASD13CR3 is a register for an analog PSoC block in row 1 column 3. For additional information, refer to the “Register Definitions” on page 434 in the Switched Capacitor Block chapter.

Bits	Name	Description
7:6	**ARefMux[1:0]**	Encoding for selecting reference input. 00b Analog ground is selected. 01b RefHi input selected. (This is usually the high reference.) 10b RefLo input selected. (This is usually the low reference.) 11b Reference selection is driven by the comparator. (When output comparator node is set high, the input is set to RefHi. When set low, the input is set to RefLo.)
5	**FSW1**	Bit for controlling gated switches. 0 Switch is disabled. 1 If the FSW1 bit is set to ‘1’, the state of the switch is determined by the AutoZero bit. If the AutoZero bit is ‘0’, the switch is enabled at all times. If the AutoZero bit is ‘1’, the switch is enabled only when the Internal PHI2 is high.
4	**FSW0**	Bits for controlling gated switches. 0 Switch is disabled. 1 Switch is enabled when PHI1 is high.
3	**BSW**	Enable switching in branch. 0 B branch is a continuous time path. 1 B branch is switched with Internal PHI2 sampling.
2	**BMuxSD**	Encoding for selecting B inputs. (Note that the available mux inputs vary by individual PSoC block.) In the following table, only columns ASD20 and ASD11 are used by the 2 column analog PSoC blocks and all columns are used by the 4 column analog PSoC blocks. **ASD20 ASD11 ASD22 ASD13** 0 ASD11 ACC00 ASD13 ACC02 1 ASC10 ACC01 ASC12 ACC03
1:0	**PWR[1:0]**	Encoding for selecting one of four power levels. 00b Off 10b Medium 01b Low 11b High

13.2.40 DECx_DH

Decimator Data High Register

Individual Register Names and Addresses:

DEC0_DH : 0,A0h DEC1_DH : 0,A2h DEC2_DH : 0,A4h DEC3_DH : 0,A6h

	7	6	5	4	3	2	1	0
Access : POR	RC : XX							
Bit Name	Data High Byte[7:0]							

This register is a dual purpose register and is used to read the high byte of the decimator's output or clear the decimator. Note that the CY8C28x03 does not have a decimator, and that the CY8C28x13 and CY8C28x23 only have two decimators.

When a hardware reset occurs, the internal state of the decimator is reset, but the output data registers (DECx_DH and DECx_DL) are not. For additional information, refer to the "Register Definitions" on page 488 in the Decimator chapter.

Bit	Name	Description	
7:0	**Data High Byte[7:0]**	Read	Returns the high byte of the decimator.
		Write	Clears the 16-bit accumulator values for one of the decimators. Either the DECx_DH or DECx_DL register may be written to clear the accumulators (that is, it is not necessary to write both).

13.2.41 DECx_DL

Decimator Data Low Register

Individual Register Names and Addresses:

DEC0_DL : 0,A1h DEC1_DL : 0,A3h DEC2_DL : 0,A5h DEC3_DL : 0,A7h

	7	6	5	4	3	2	1	0
Access : POR	RC : XX							
Bit Name	Data Low Byte[7:0]							

This register is a dual purpose register and is used to read the low byte of the decimator's output or clear the decimator.

When a hardware reset occurs, the internal state of the Decimator is reset, but the output data registers (DECx_DH and DECx_DL) are not. For additional information, refer to the "Register Definitions" on page 488 in the Decimator chapter.

Bit	Name	Description	
7:0	**Data Low Byte[7:0]**	Read	Returns the **low** byte of the decimator.
		Write	Clears the 16-bit accumulator values for one of the decimators. Either the DECx_DH or DECx_DL register may be written to clear the accumulators (that is, it is not necessary to write both).

13.2.42 MULx_X

Multiply Input X Register

Individual Register Names and Addresses:

MUL1_X : 0,A8h MUL0_X : 0,E8h

	7	6	5	4	3	2	1	0
Access : POR	W : XX							
Bit Name	Data[7:0]							

This register is one of two multiplicand registers for the signed 8-bit multiplier in the PSoC MAC.

This register is for 2 MAC block PSoC devices only. For additional information, refer to the “Register Definitions” on page 478 in the Multiply Accumulate chapter.

Bit	Name	Description
7:0	**Data[7:0]**	X multiplicand for MAC 8-bit multiplier.

13.2.43 MULx_Y

Multiply Input Y Register

Individual Register Names and Addresses:

MUL1_Y : 0,A9h MUL0_Y : 0,E9h

	7	6	5	4	3	2	1	0
Access : POR	W : XX							
Bit Name	Data[7:0]							

This register is one of two multiplicand registers for the signed 8-bit multiplier in the PSoC MAC.

This register is for 2 MAC block PSoC devices only. For additional information, refer to the “Register Definitions” on page 478 in the Multiply Accumulate chapter.

Bit	Name	Description
7:0	**Data[7:0]**	Y multiplicand for MAC 8-bit multiplier.

13.2.44 MULx_DH

Multiply Result High Byte Register

Individual Register Names and Addresses:

MUL1_DH : 0,AAh MUL0_DH : 0,EAh

	7	6	5	4	3	2	1	0
Access : POR	R : XX							
Bit Name	Data[7:0]							

This register holds the most significant byte of the 16-bit product.

This register is for 2 MAC block PSoC devices only. For additional information, refer to the “Register Definitions” on page 478 in the Multiply Accumulate chapter.

Bit	Name	Description
7:0	**Data[7:0]**	High byte of MAC multiplier 16-bit product.

13.2.45 MULx_DL

Multiply Result Low Byte Register

Individual Register Names and Addresses:

MUL1_DL : 0,ABh MUL0_DL : 0,EBh

	7	6	5	4	3	2	1	0
Access : POR	R : XX							
Bit Name	Data[7:0]							

This register holds the least significant byte of the 16-bit product.

This register is for 2 MAC block PSoC devices only. For additional information, refer to the “Register Definitions” on page 478 in the Multiply Accumulate chapter.

Bit	Name	Description
7:0	**Data[7:0]**	Low byte of MAC multiplier 16-bit product.

13.2.46 MACx_X/ACCx_DR1

Accumulator Data Register 1

Individual Register Names and Addresses:

MAC1_X/ACC1_DR1 : 0,ACh MAC0_X/ACC0_DR1 : 0,ECh

	7	6	5	4	3	2	1	0
Access : POR	RW : 00							
Bit Name	Data[7:0]							

This is the multiply accumulate X register and the second byte of the accumulated value.

This register is only for PSoC devices with two MAC blocks. For additional information, refer to the “Register Definitions” on page 478 in the Multiply Accumulate chapter.

Bit	Name	Description	
7:0	**Data[7:0]**	Read	Returns the second byte of the 32-bit accumulated value. The second byte is next to the least significant byte for the accumulated value.
		Write	X multiplicand for the MAC 16-bit multiply and 32-bit accumulator.

13.2.47 MACx_Y/ACCx_DR0

Accumulator Data Register 0

Individual Register Names and Addresses:

MAC1_Y/ACC1_DR0 : 0,ADh MAC0_Y/ACC0_DR0 : 0,EDh

	7	6	5	4	3	2	1	0
Access : POR	RW : 00							
Bit Name	Data[7:0]							

This is the multiply accumulate Y register and the first byte of the accumulated value.

This register is only for PSoC devices with two MAC blocks.For additional information, refer to the “Register Definitions” on page 478 in the Multiply Accumulate chapter.

Bit	Name	Description	
7:0	**Data[7:0]**	Read	Returns the first byte of the 32-bit accumulated value. The first byte is the least significant byte for the accumulated value.
		Write	Y multiplicand for the MAC 16-bit multiply and 32-bit accumulate.

13.2.48 MACx_CL0/ACCx_DR3

Accumulator Data Register 3

Individual Register Names and Addresses:

MAC1_CL0/ACC1_DR3 : 0,AEh MAC0_CL0/ACC0_DR3 : 0,EEh

	7	6	5	4	3	2	1	0
Access : POR	RW : 00							
Bit Name	Data[7:0]							

This is an accumulator clear register and the fourth byte of the accumulated value.

This register is for 2 MAC block PSoC devices only. For additional information, refer to the “Register Definitions” on page 478 in the Multiply Accumulate chapter.

Bit	Name	Description	
7:0	**Data[7:0]**	Read	Returns the fourth byte of the 32-bit accumulated value. The fourth byte is the ***most significant byte (MSB)*** for the accumulated value.
		Write	Writing any value to this address will clear all four bytes of the Accumulator.

13.2.49 MACx_CL1/ACCx_DR2

Accumulator Data Register 2

Individual Register Names and Addresses:

MAC1_CL1/ACC1_DR2 : 0,AFh MAC0_CL1/ACC0_DR2 : 0,EFh

	7	6	5	4	3	2	1	0
Access : POR	RW : 00							
Bit Name	Data[7:0]							

This is an accumulator clear register and the third byte of the accumulated value.

This register is only for PSoC devices with two MAC blocks. For additional information, refer to the “Register Definitions” on page 478 in the Multiply Accumulate chapter.

Bit	Name	Description	
7:0	**Data[7:0]**	Read	Returns the third byte of the 32-bit accumulated value. The third byte is the next to most significant byte for the accumulated value.
		Write	Writing any value to this address will clear all four bytes of the Accumulator.

13.2.50 RDIxRI

Row Digital Interconnect Row Input Register

Individual Register Names and Addresses:

RDI0RI : x,B0h RDI1RI : x,B8h RDI2RI : x,C0h

	7	6	5	4	3	2	1	0
Access : POR	RW : 0		RW : 0		RW : 0		RW : 0	
Bit Name	RI3[1:0]		RI2[1:0]		RI1[1:0]		RI0[1:0]	

This register is used to control the input mux that determines which global inputs will drive the row inputs.

The ‘x’ in the digital register’s name represents the digital row index. Depending on the digital row characteristics of your PSoC device (see the table titled “PSoC Device Characteristics” on page 311), some addresses may not be available. For additional information, refer to the “Register Definitions” on page 329 in the Row Digital Interconnect chapter.

Bit	Name	Description
7:6	**RI3[1:0]**	Select source for row input 3. 00b GIE[3] 01b GIE[7] 10b GIO[3] 11b GIO[7]
5:4	**RI2[1:0]**	Select source for row input 2. 00b GIE[2] 01b GIE[6] 10b GIO[2] 11b GIO[6]
3:2	**RI1[1:0]**	Select source for row input 1. 00b GIE[1] 01b GIE[5] 10b GIO[1] 11b GIO[5]
1:0	**RI0[1:0]**	Select source for row input 0. 00b GIE[0] 01b GIE[4] 10b GIO[0] 11b GIO[4]

13.2.51 RDIxSYN

Row Digital Interconnect Synchronization Register

Individual Register Names and Addresses:

RDI0SYN : x,B1h RDI1SYN : x,B9h RDI2SYN : x,C1h

	7	6	5	4	3	2	1	0
Access : POR					RW : 0	RW : 0	RW : 0	RW : 0
Bit Name					RI3SYN	RI2SYN	RI1SYN	RI0SYN

This register is used to control the input synchronization.

The ‘x’ in the digital register’s name represents the digital row index. Depending on the digital row characteristics of your PSoC device (see the table titled “PSoC Device Characteristics” on page 311), some addresses may not be available. In the table, note that reserved bits are grayed table cells and are not described in the bit description section. Reserved bits should always be written with a value of ‘0’. For additional information, refer to the “Register Definitions” on page 329 in the Row Digital Interconnect chapter.

Bit	Name		Description
3	**RI3SYN**	0	Row input 3 is synchronized to the SYSCLK system clock.
		1	Row input 3 is passed without synchronization.
2	**RI2SYN**	0	Row input 2 is synchronized to the SYSCLK system clock.
		1	Row input 2 is passed without synchronization.
1	**RI1SYN**	0	Row input 1 is synchronized to the SYSCLK system clock.
		1	Row input 1 is passed without synchronization.
0	**RI0SYN**	0	Row input 0 is synchronized to the SYSCLK system clock.
		1	Row input 0 is passed without synchronization.

13.2.52 RDIxIS

Row Digital Interconnect Input Select Register

Individual Register Names and Addresses:

RDI0IS : x,B2h RDI1IS : x,BAh RDI2IS : x,C2h

	7	6	5	4	3	2	1	0
Access : POR			RW : 0		RW : 0	RW : 0	RW : 0	RW : 0
Bit Name			BCSEL[1:0]		IS3	IS2	IS1	IS0

This register is used to configure the inputs to the digital row LUTS and select a broadcast driver from another row if present.

The ‘x’ in the digital register’s name represents the digital row index. Depending on the digital row characteristics of your PSoC device (see the table titled “PSoC Device Characteristics” on page 311), some addresses may not be available. In the table, note that reserved bits are grayed table cells and are not described in the bit description section. Reserved bits should always be written with a value of ‘0’. For additional information, refer to the “Register Definitions” on page 329 in the Row Digital Interconnect chapter.

Bit	Name	Description
5:4	**BCSEL[1:0]**	When the BCSEL value is equal to the row number, the ***tri-state*** buffer that drives the row broadcast ***net*** from the input select mux is disabled, so that one of the row’s blocks may drive the local row broadcast net. 00b Row 0 drives row broadcast net. 01b Row 1 drives row broadcast net. 10b Row 2 drives row broadcast net. Reserved for 2 row PSoC devices. 11b Row 3 drives row broadcast net. Reserved for 2 row PSoC devices.
3	**IS3**	0 The ‘A’ input of LUT3 is RO[3]. 1 The ‘A’ input of LUT3 is RI[3].
2	**IS2**	0 The ‘A’ input of LUT2 is RO[2]. 1 The ‘A’ input of LUT2 is RI[2].
1	**IS1**	0 The ‘A’ input of LUT1 is RO[1]. 1 The ‘A’ input of LUT1 is RI[1].
0	**IS0**	0 The ‘A’ input of LUT0 is RO[0]. 1 The ‘A’ input of LUT0 is RI[0].

13.2.53 RDIxLT0

Row Digital Interconnect Logic Table Register 0

Individual Register Names and Addresses:

RDI0LT0 : x,B3h RDI1LT0 : x,BBh RDI2LT0 : x,C3h

	7	6	5	4	3	2	1	0
Access : POR	RW : 0				RW : 0			
Bit Name	LUT1[3:0]				LUT0[3:0]			

This register is used to select the logic function of the digital row LUTS.

The ‘x’ in the digital register’s name represents the digital row index. Depending on the digital row characteristics of your PSoC device (see the table titled “PSoC Device Characteristics” on page 311), some addresses may not be available. For additional information, refer to the “Register Definitions” on page 329 in the Row Digital Interconnect chapter.

Bit	Name	Description
7:4	**LUT1[3:0]**	Select ***logic function*** for LUT1. **Function** 0000b FALSE 0001b A AND $\overline{B}$ 0010b A AND $\overline{B}$ 0011b $\overline{A}$ 0100b A AND B 0101b B 0110b A XOR B 0111b A OR B 1000b A NOR B 1001b $\overline{A}$ XNOR B 1010b $\overline{B}$ 1011b $\overline{A}$ OR $\overline{B}$ 1100b $\overline{A}$ 1101b $\overline{A}$ OR B 1110b A NAND B 1111b TRUE

(continued on next page)

13.2.53 RDIxLT0 *(continued)*

3:0 LUT0[3:0] Select logic function for LUT0.

	Function
0000b	FALSE
0001b	A AND $\overline{B}$
0010b	A AND $\overline{B}$
0011b	$\overline{A}$
0100b	$\overline{A}$ AND B
0101b	B
0110b	A XOR B
0111b	A OR B
1000b	A NOR B
1001b	$\overline{A}$ XNOR B
1010b	$\overline{B}$
1011b	$\overline{A}$ OR $\overline{B}$
1100b	$\overline{A}$
1101b	$\overline{A}$ OR B
1110b	A NAND B
1111b	TRUE

13.2.54 RDIxLT1

Row Digital Interconnect Logic Table Register 1

Individual Register Names and Addresses:

RDI0LT1 : x,B4h RDI1LT1 : x,BCh RDI2LT1 : x,C4h

	7	6	5	4	3	2	1	0
Access : POR	RW : 0				RW : 0			
Bit Name	LUT3[3:0]				LUT2[3:0]			

This register is used to select the logic function of the digital row LUTS.

The ‘x’ in the digital register’s name represents the digital row index. Depending on the digital row characteristics of your PSoC device (see the table titled “PSoC Device Characteristics” on page 311), some addresses may not be available. For additional information, refer to the “Register Definitions” on page 329 in the Row Digital Interconnect chapter.

Bit	Name	Description
7:4	**LUT3[3:0]**	Select logic function for LUT3. **Function** 0000b FALSE 0001b A AND $\overline{B}$ 0010b A AND $\overline{B}$ 0011b $\overline{A}$ 0100b $\overline{A}$ AND B 0101b B 0110b A XOR B 0111b A OR B 1000b A NOR B 1001b $\overline{A}$ XNOR B 1010b $\overline{B}$ 1011b $\overline{A}$ OR $\overline{B}$ 1100b $\overline{A}$ 1101b $\overline{A}$ OR B 1110b A NAND B 1111b TRUE

(continued on next page)

13.2.54 RDIxLT1 *(continued)*

3:0 LUT2[3:0] Select logic function for LUT2.

	Function
0000b	FALSE
0001b	A AND $\overline{B}$
0010b	A AND $\overline{B}$
0011b	$\overline{A}$
0100b	$\overline{A}$ AND B
0101b	B
0110b	A XOR B
0111b	A OR B
1000b	A NOR B
1001b	$\overline{A}$ XNOR B
1010b	$\overline{B}$
1011b	$\overline{A}$ OR $\overline{B}$
1100b	$\overline{A}$
1101b	$\overline{A}$ OR B
1110b	A NAND B
1111b	TRUE

13.2.55 RDIxRO0

Row Digital Interconnect Row Output Register 0

Individual Register Names and Addresses:

RDI0RO0 : x,B5h RDI1RO0 : x,BDh RDI2RO0 : x,C5h

	7	6	5	4	3	2	1	0
Access : POR	RW : 0	RW : 0	RW : 0	RW : 0	RW : 0	RW : 0	RW : 0	RW : 0
Bit Name	GOO5EN	GOO1EN	GOE5EN	GOE1EN	GOO4EN	GOO0EN	GOE4EN	GOE0EN

This register is used to select the global nets that the row outputs drive.

The ‘x’ in the digital register’s name represents the digital row index. Depending on the digital row characteristics of your PSoC device (see the table titled “PSoC Device Characteristics” on page 311), some addresses may not be available. For additional information, refer to the “Register Definitions” on page 329 in the Row Digital Interconnect chapter.

Bit	Name	Description	
7	**GOO5EN**	0 1	Disable Row’s LUT1 output to global output. Enable Row’s LUT1 output to GOO[5].
6	**GOO1EN**	0 1	Disable Row’s LUT1 output to global output. Enable Row’s LUT1 output to GOO[1].
5	**GOE5EN**	0 1	Disable Row’s LUT1 output to global output. Enable Row’s LUT1 output to GOE[5].
4	**GOE1EN**	0 1	Disable Row’s LUT1 output to global output. Enable Row’s LUT1 output to GOE[1].
3	**GOO4EN**	0 1	Disable Row’s LUT0 output to global output. Enable Row’s LUT0 output to GOO[4].
2	**GOO0EN**	0 1	Disable Row’s LUT0 output to global output. Enable Row’s LUT0 output to GOO[0].
1	**GOE4EN**	0 1	Disable Row’s LUT0 output to global output. Enable Row’s LUT0 output to GOE[4].
0	**GOE0EN**	0 1	Disable Row’s LUT0 output to global output. Enable Row’s LUT0 output to GOE[0].

13.2.56 RDIxRO1

Row Digital Interconnect Row Output Register 1

Individual Register Names and Addresses:

RDI0RO1 : x,B6h RDI1RO1 : x,BEh RDI2RO1 : x,C6h

	7	6	5	4	3	2	1	0
Access : POR	RW : 0	RW : 0	RW : 0	RW : 0	RW : 0	RW : 0	RW : 0	RW : 0
Bit Name	GOO7EN	GOO3EN	GOE7EN	GOE3EN	GOO6EN	GOO2EN	GOE6EN	GOE2EN

This register is used to select the global nets that the row outputs drive.

The ‘x’ in the digital register’s name represents the digital row index. Depending on the digital row characteristics of your PSoC device (see the table titled “PSoC Device Characteristics” on page 311), some addresses may not be available. For additional information, refer to the “Register Definitions” on page 329 in the Row Digital Interconnect chapter.

Bit	Name	Description	
7	**GOO7EN**	0 1	Disable Row’s LUT3 output to global output. Enable Row’s LUT3 output to GOO[7].
6	**GOO3EN**	0 1	Disable Row’s LUT3 output to global output. Enable Row’s LUT3 output to GOO[3].
5	**GOE7EN**	0 1	Disable Row’s LUT3 output to global output. Enable Row’s LUT3 output to GOE[7].
4	**GOE3EN**	0 1	Disable Row’s LUT3 output to global output. Enable Row’s LUT3 output to GOE[3].
3	**GOO6EN**	0 1	Disable Row’s LUT2 output to global output. Enable Row’s LUT2 output to GOO[6].
2	**GOO2EN**	0 1	Disable Row’s LUT2 output to global output. Enable Row’s LUT2 output to GOO[2].
1	**GOE6EN**	0 1	Disable Row’s LUT2 output to global output. Enable Row’s LUT2 output to GOE[6].
0	**GOE2EN**	0 1	Disable Row’s LUT2 output to global output. Enable Row’s LUT2 output to GOE[2].

13.2.57 RDIxDSM

Row Digital Interconnect Delta Sigma Modulator Function Select Register

Individual Register Names and Addresses:

RDI0DSM : x,B7h RDI1DSM : x,BFh RDI2DSM : x,C7h

	7	6	5	4	3	2	1	0
Access : POR	RW : 0000				RW : 0000			
Bit Name	AVG_SEL[3:0]				AVG_EN[3:0]			

The Row Digital Interconnect Delta Sigma Modulator Register (RDIxDSM) is used to select the Delta Sigma Modulator function on the row outputs.

The ‘x’ in the digital register’s name represents the digital row index. Depending on the digital row characteristics of your PSoC device (see the table titled “PSoC Device Characteristics” on page 311), some addresses may not be available. For additional information, refer to the “Register Definitions” on page 329 in the Row Digital Interconnect chapter.

Bit	Name	Description
7:4	**AVG_SEL[3:0]**	Selects digital block output as average-control signal. 0000b DBC00 0001b DBC01 0010b DCC02 0011b DCC03 0100b DBC10 0101b DBC11 0110b DCC12 0111b DCC13 1000b DBC20 1001b DBC21 1010b DCC22 1011b DCC23 1100b low 1101b low 1110b low 1111b low
3:0	**AVG_EN[3:0]**	Enables average function on corresponding RO channel. AVG_EN[0] 0 Disable. 1 Enables average output on ROW[0] output. AVG_EN[1] 0 Disable. 1 Enables average output on ROW[1] output. AVG_EN[2] 0 Disable. 1 Enables average output on ROW[2] output. AVG_EN[3] 0 Disable. 1 Enables average output on ROW[3] output.

13.2.58 CUR_PP

Current Page Pointer Register

Individual Register Names and Addresses:

CUR_PP: 0,D0h

	7	6	5	4	3	2	1	0
Access : POR						RW : 0		
Bit Name						Page Bits[2:0]		

This register is used to set the effective SRAM page for normal memory accesses in a multi-SRAM page PSoC device.

In the table, note that reserved bits are grayed table cells and are not described in the bit description section. Reserved bits should always be written with a value of '0'. For additional information, refer to the "Register Definitions" on page 60 in the RAM Paging chapter.

Bit	Name	Description
2:0	**Page Bits[2:0]**	These bits determine which SRAM Page is used for generic SRAM access. See the RAM Paging chapter on page 57 for more information. 000b SRAM Page 0 001b SRAM Page 1 010b SRAM Page 2 011b SRAM Page 3 100b SRAM Page 4 101b SRAM Page 5 110b SRAM Page 6 111b SRAM Page 7 **Note** A value beyond the available SRAM for a specific PSoC device, should not be set.

13.2.59 STK_PP

Stack Page Pointer Register

Individual Register Names and Addresses:

STK_PP: 0,D1h

	7	6	5	4	3	2	1	0
Access : POR						RW : 0		
Bit Name						Page Bits[2:0]		

This register is used to set the effective SRAM page for stack memory accesses in a multi-SRAM page PSoC device.

In the table, note that reserved bits are grayed table cells and are not described in the bit description section. Reserved bits should always be written with a value of '0'. For additional information, refer to the "Register Definitions" on page 60 in the RAM Paging chapter.

Bit	Name	Description
2:0	**Page Bits[2:0]**	These bits determine which SRAM Page is used to hold the stack. See the RAM Paging chapter on page 57 for more information. 000b SRAM Page 0 001b SRAM Page 1 010b SRAM Page 2 011b SRAM Page 3 100b SRAM Page 4 101b SRAM Page 5 110b SRAM Page 6 111b SRAM Page 7 **Note** A value beyond the available SRAM for a specific PSoC device, should not be set.

13.2.60 IDX_PP

Indexed Memory Access Page Pointer Register

Individual Register Names and Addresses:

IDX_PP: 0,D3h

	7	6	5	4	3	2	1	0
Access : POR						RW : 0		
Bit Name						Page Bits[2:0]		

This register is used to set the effective SRAM page for indexed memory accesses in a multi-SRAM page PSoC device.

In the table, note that reserved bits are grayed table cells and are not described in the bit description section. Reserved bits should always be written with a value of '0'. For additional information, refer to the "Register Definitions" on page 60 in the RAM Paging chapter.

Bit	Name	Description
2:0	**Page Bits[2:0]**	These bits determine which SRAM Page an indexed memory access operates on. See the "Register Definitions" on page 60 for more information on when this register is active. 000b SRAM Page 0 001b SRAM Page 1 010b SRAM Page 2 011b SRAM Page 3 100b SRAM Page 4 101b SRAM Page 5 110b SRAM Page 6 111b SRAM Page 7 **Note** A value beyond the available SRAM for a specific PSoC device, should not be set.

13.2.61 MVR_PP

MVI Read Page Pointer Register

Individual Register Names and Addresses:

MVR_PP: 0,D4h

	7	6	5	4	3	2	1	0
Access : POR						RW : 0		
Bit Name						Page Bits[2:0]		

This register is used to set the effective SRAM page for MVI read memory accesses in a multi-SRAM page PSoC device.

In the table, note that reserved bits are grayed table cells and are not described in the bit description section. Reserved bits should always be written with a value of '0'. For additional information, refer to the "Register Definitions" on page 60 in the RAM Paging chapter.

Bit	Name	Description
2:0	**Page Bits[2:0]**	These bits determine which SRAM Page a MVI Read instruction operates on. 000b SRAM Page 0 001b SRAM Page 1 010b SRAM Page 2 011b SRAM Page 3 100b SRAM Page 4 101b SRAM Page 5 110b SRAM Page 6 111b SRAM Page 7 **Note** A value beyond the available SRAM for a specific PSoC device, should not be set.

13.2.62 MVW_PP

MVI Write Page Pointer Register

Individual Register Names and Addresses:

MVW_PP: 0,D5h

	7	6	5	4	3	2	1	0
Access : POR						RW : 0		
Bit Name						Page Bits[2:0]		

This register is used to set the effective SRAM page for MVI write memory accesses in a multi-SRAM page PSoC device.

In the table, note that reserved bits are grayed table cells and are not described in the bit description section. Reserved bits should always be written with a value of '0'. For additional information, refer to the "Register Definitions" on page 60 in the RAM Paging chapter.

Bit	Name	Description
2:0	**Page Bits[2:0]**	These bits determine which SRAM Page a MVI Write instruction operates on. 000b SRAM Page 0 001b SRAM Page 1 010b SRAM Page 2 011b SRAM Page 3 100b SRAM Page 4 101b SRAM Page 5 110b SRAM Page 6 111b SRAM Page 7 **Note** A value beyond the available SRAM for a specific PSoC device, should not be set.

13.2.63 I2Cx_CFG

I²C Configuration Register

Individual Register Names and Addresses:

I2C0_CFG : 0,D6h I2C1_CFG : 1,6Bh

	7	6	5	4	3	2	1	0
Access : POR		RW : 0	RW : 0	RW : 0	RW : 0		RW : 0	RW : 0
Bit Name		PSelect	Bus Error IE	Stop IE	Clock Rate[1:0]		Enable Master	Enable Slave

This register is used to set the basic operating modes, baud rate, and selection of interrupts. Note that the second I²C block is available in the CY8C28x03, CY8C28x23, CY8C28x43, and CY8C28x45 PSoC devices only.

In the table, note that reserved bits are grayed table cells and are not described in the bit description section. Reserved bits should always be written with a value of '0'. For additional information, refer to the "Register Definitions" on page 497 in the I²C chapter.

Bit	Name	Description
6	**PSelect**	I²C Pin Select I2C1 I2C0 0 P1[2] and P1[6] P1[7] and P1[5] 1 P3[0] and P3[2] P1[1] and P1[0] **Note** Read the I²C chapter for a discussion of the side effects of choosing the P1[0] and P1[1] pair of pins.
5	**Bus Error IE**	Bus Error Interrupt Enable 0 Disabled 1 Enabled. An interrupt is generated on the detection of a Bus Error.
4	**Stop IE**	Stop Interrupt Enable 0 Disabled 1 Enabled. An interrupt is generated on the detection of a Stop Condition.
3:2	**Clock Rate[1:0]**	00b 100K Standard Mode 01b 400K Fast Mode 10b 50K Standard Mode 11b Reserved
1	**Enable Master**	Writing a '0' to both the Enable Master and Enable Slave bits will hold the I²C hardware in reset. 0 Disabled 1 Enabled
0	**Enable Slave**	Writing a '0' to both the Enable Master and Enable Slave bits will hold the I²C hardware in reset. 0 Disabled 1 Enabled

13.2.64 I2Cx_SCR

I²C Status and Control Register

Individual Register Names and Addresses:

I2C0_SCR : 0,D7h I2C1_SCR : 0,E4h

	7	6	5	4	3	2	1	0
Access : POR	RC : 0	RC : 0	RC : 0	RW : 0	RC : 0	RW : 0	RC : 0	RC : 0
Bit Name	Bus Error	Lost Arb	Stop Status	ACK	Address	Transmit	LRB	Byte Complete

This register is used by both master and slave to control the flow of data bytes and to keep track of the bus state during a transfer.

Bits in this register are held in reset until one of the enable bits in I2C_CFG is set. Note that the second I²C block is available in the CY8C28x03, CY8C28x23, CY8C28x43, and CY8C28x45 PSoC devices only. For additional information, refer to the "Register Definitions" on page 497 in the I²C chapter.

Bit	Name	Description
7	**Bus Error**	0 This status bit must be cleared by firmware by writing a '0' to the bit position. It is never cleared by the hardware. 1 A misplaced Start or Stop condition was detected.
6	**Lost Arb**	0 This bit is set immediately on lost arbitration; however, it does not cause an interrupt. This status may be checked after the following Byte Complete interrupt. Any Start detect or a write to the Start or Restart generate bits (I2C_MSCR register), when operating in Master mode, will also clear the bit. 1 Lost Arbitration
5	**Stop Status**	0 This status bit must be cleared by firmware with write of '0' to the bit position. It is never cleared by the hardware. 1 A Stop condition was detected.
4	**ACK**	Acknowledge Out. This bit is automatically cleared by hardware on a Byte Complete event. 0 NAK the last received byte. 1 ACK the last received byte
3	**Address**	0 This status bit must be cleared by firmware with write of '0' to the bit position. 1 The received byte is a slave address.
2	**Transmit**	Transmit bit is set by firmware to define the direction of the byte transfer. Any Start detect or a write to the Start or Restart generate bits, when operating in Master mode, will also clear the bit. 0 Receive mode 1 Transmit mode
1	**LRB**	Last Received Bit. The value of the ninth bit in a Transmit sequence, which is the acknowledge bit from the receiver. Any Start detect or a write to the Start or Restart generate bits, when operating in Master mode, will also clear the bit. 0 Last transmitted byte was ACKed by the receiver. 1 Last transmitted byte was NAKed by the receiver.

(continued on next page)

13.2.64 I2Cx_SCR *(continued)*

0 **Byte Complete**

Transmit/Receive Mode:
0 No completed transmit/receive since last cleared by firmware. Any Start detect or a write to the Start or Restart generate bits, when operating in Master mode, will also clear the bit.

Transmit Mode:
1 Eight bits of data have been transmitted and an ACK or NAK has been received.

Receive Mode:
1 Eight bits of data have been received.

13.2.65 I2Cx_DR

I²C Data Register

Individual Register Names and Addresses:

I2C1_DR : 0,67h I2C0_DR : 0,D8h

	7	6	5	4	3	2	1	0
Access : POR	RW : 00							
Bit Name	Data[7:0]							

This register provides read/write access to the Shift register. Note that the second I²C block is available in the CY8C28x03, CY8C28x23, CY8C28x43, and CY8C28x45 PSoC devices only.

This register is read only for received data and write only for transmitted data. For additional information, refer to the "Register Definitions" on page 497 in the I²C chapter.

Bit	Name	Description
7:0	**Data[7:0]**	Read received data or write data to transmit.

13.2.66 I2Cx_MSCR

I²C Master Status and Control Register

Individual Register Names and Addresses:

I2C0_MSCR : 0,D9h I2C1_MSCR : 0,E5h

	7	6	5	4	3	2	1	0
Access : POR					R : 0	R : 0	RW : 0	RW : 0
Bit Name					Bus Busy	Master Mode	Restart Gen	Start Gen

This register implements I²C framing controls and provides Bus Busy status. Note that the second I²C block is available in the CY8C28x03, CY8C28x23, CY8C28x43, and CY8C28x45 PSoC devices only.

Bits in this register are held in reset until one of the enable bits in I2C_CFG is set. In the table, note that reserved bits are grayed table cells and are not described in the bit description section. Reserved bits should always be written with a value of '0'. For additional information, refer to the "Register Definitions" on page 497 in the I²C chapter.

Bit	Name	Description
3	**Bus Busy**	This bit is set to the following. 0 When a Stop condition is detected (from any bus master). 1 When a Start condition is detected (from any bus master).
2	**Master Mode**	This bit is set/cleared by hardware when the device is operating as a master. 0 Stop condition detected, generated by this device. 1 Start condition detected, generated by this device.
1	**Restart Gen**	This bit is cleared by hardware when the Restart generation is complete. 0 Restart generation complete. 1 Generate a Restart condition.
0	**Start Gen**	This bit is cleared by hardware when the Start generation is complete. 0 Start generation complete. 1 Generate a Start condition and send a byte (address) to the I²C bus, if bus is not busy.

13.2.67 INT_CLR0

Interrupt Clear Register 0

Individual Register Names and Addresses:

INT_CLR0: 0,DAh

	7	6	5	4	3	2	1	0
Access : POR	RW : 0	RW : 0	RW : 0	RW : 0	RW : 0	RW : 0	RW : 0	RW : 0
Bit Name	VC3	Sleep	GPIO	Analog 3	Analog 2	Analog 1	Analog 0	V Monitor

This register is used to enable the individual interrupt sources' ability to clear posted interrupts.

When bits in this register are read, a '1' will be returned for every bit position that has a corresponding posted interrupt. When bits in this register are written with a '0' and ENSWINT is not set, posted interrupts will be cleared at the corresponding bit positions. If there was not a posted interrupt, there is no effect. When bits in this register are written with a '1' and ENSWINT is set, an interrupt is posted in the interrupt controller. Note that the ENSWINT bit is in the INT_MSK3 register on page 206.

For additional information, refer to the "Register Definitions" on page 68 in the Interrupt Controller chapter.

Bit	Name	Description
7	**VC3**	Read 0 No posted interrupt for Variable Clock 3. Read 1 Posted interrupt present for Variable Clock 3. Write 0 AND ENSWINT = 0 Clear posted interrupt if it exists. Write 1 AND ENSWINT = 0 No effect. Write 0 AND ENSWINT = 1 No effect. Write 1 AND ENSWINT = 1 Post an interrupt for Variable Clock 3.
6	**Sleep**	Read 0 No posted interrupt for sleep timer. Read 1 Posted interrupt present for sleep timer. Write 0 AND ENSWINT = 0 Clear posted interrupt if it exists. Write 1 AND ENSWINT = 0 No effect. Write 0 AND ENSWINT = 1 No effect. Write 1 AND ENSWINT = 1 Post an interrupt for sleep timer.
5	**GPIO**	Read 0 No posted interrupt for general purpose inputs and outputs (pins). Read 1 Posted interrupt present for GPIO (pins). Write 0 AND ENSWINT = 0 Clear posted interrupt if it exists. Write 1 AND ENSWINT = 0 No effect. Write 0 AND ENSWINT = 1 No effect. Write 1 AND ENSWINT = 1 Post an interrupt for general purpose inputs and outputs (pins).
4	**Analog 3**	Read 0 No posted interrupt for analog columns. Read 1 Posted interrupt present for analog columns Write 0 AND ENSWINT = 0 Clear posted interrupt if it exists. Write 1 AND ENSWINT = 0 No effect. Write 0 AND ENSWINT = 1 No effect. Write 1 AND ENSWINT = 1 Post an interrupt for analog columns.

continued on next page)

13.2.67 INT_CLR0 *(continued)*

3	**Analog 2**	Read 0 No posted interrupt for analog columns. Read 1 Posted interrupt present for analog columns Write 0 AND ENSWINT = 0 Clear posted interrupt if it exists. Write 1 AND ENSWINT = 0 No effect. Write 0 AND ENSWINT = 1 No effect. Write 1 AND ENSWINT = 1 Post an interrupt for analog columns.
2	**Analog 1**	Read 0 No posted interrupt for analog columns. Read 1 Posted interrupt present for analog columns Write 0 AND ENSWINT = 0 Clear posted interrupt if it exists. Write 1 AND ENSWINT = 0 No effect. Write 0 AND ENSWINT = 1 No effect. Write 1 AND ENSWINT = 1 Post an interrupt for analog columns.
1	**Analog 0**	Read 0 No posted interrupt for analog columns. Read 1 Posted interrupt present for analog columns Write 0 AND ENSWINT = 0 Clear posted interrupt if it exists. Write 1 AND ENSWINT = 0 No effect. Write 0 AND ENSWINT = 1 No effect. Write 1 AND ENSWINT = 1 Post an interrupt for analog columns.
0	**V Monitor**	Read 0 No posted interrupt for supply voltage monitor. Read 1 Posted interrupt present for supply voltage monitor. Write 0 AND ENSWINT = 0 Clear posted interrupt if it exists. Write 1 AND ENSWINT = 0 No effect. Write 0 AND ENSWINT = 1 No effect. Write 1 AND ENSWINT = 1 Post an interrupt for supply voltage monitor.

13.2.68 INT_CLR1

Interrupt Clear Register 1

Individual Register Names and Addresses:

INT_CLR1: 0,DBh

4, 2 Rows	7	6	5	4	3	2	1	0
Access : POR	RW : 0	RW : 0	RW : 0	RW : 0	RW : 0	RW : 0	RW : 0	RW : 0
Bit Name	DCC13	DCC12	DBC11	DBC10	DCC03	DCC02	DBC01	DBC00

This register is used to clear posted interrupts for digital blocks or generate interrupts.

When bits in this register are read, a ‘1’ will be returned for every bit position that has a corresponding posted interrupt. When bits in this register are written with a ‘0’ and ENSWINT is not set, posted interrupts will be cleared at the corresponding bit positions. If there was not a posted interrupt, there is no effect. When bits in this register are written with a ‘1’ and ENSWINT is set, an interrupt is posted in the interrupt controller. Note that the ENSWINT bit is in the INT_MSK3 register on page 206.

For additional information, refer to the “Register Definitions” on page 68 in the Interrupt Controller chapter.

Bit	Name	Description
7	**DCC13**	Digital Communications Block type B, row 1, position 3. Read 0 No posted interrupt. Read 1 Posted interrupt present. Write 0 AND ENSWINT = 0 Clear posted interrupt if it exists. Write 1 AND ENSWINT = 0 No effect. Write 0 AND ENSWINT = 1 No effect. Write 1 AND ENSWINT = 1 Post an interrupt.
6	**DCC12**	Digital Communications Block type B, row 1, position 2. Read 0 No posted interrupt. Read 1 Posted interrupt present. Write 0 AND ENSWINT = 0 Clear posted interrupt if it exists. Write 1 AND ENSWINT = 0 No effect. Write 0 AND ENSWINT = 1 No effect. Write 1 AND ENSWINT = 1 Post an interrupt.
5	**DBC11**	Digital Basic Block type B, row 1, position 1. Read 0 No posted interrupt. Read 1 Posted interrupt present. Write 0 AND ENSWINT = 0 Clear posted interrupt if it exists. Write 1 AND ENSWINT = 0 No effect. Write 0 AND ENSWINT = 1 No effect. Write 1 AND ENSWINT = 1 Post an interrupt.

(continued on next page)

13.2.68 INT_CLR1 *(continued)*

4	**DBC10**	Digital Basic Block type B, row 1, position 0. Read 0 No posted interrupt. Read 1 Posted interrupt present. Write 0 AND ENSWINT = 0 Clear posted interrupt if it exists. Write 1 AND ENSWINT = 0 No effect. Write 0 AND ENSWINT = 1 No effect. Write 1 AND ENSWINT = 1 Post an interrupt.
3	**DCC03**	Digital Communications Block type B, row 0, position 3. Read 0 No posted interrupt. Read 1 Posted interrupt present. Write 0 AND ENSWINT = 0 Clear posted interrupt if it exists. Write 1 AND ENSWINT = 0 No effect. Write 0 AND ENSWINT = 1 No effect. Write 1 AND ENSWINT = 1 Post an interrupt.
2	**DCC02**	Digital Communications Block type B, row 0, position 2. Read 0 No posted interrupt. Read 1 Posted interrupt present. Write 0 AND ENSWINT = 0 Clear posted interrupt if it exists. Write 1 AND ENSWINT = 0 No effect. Write 0 AND ENSWINT = 1 No effect. Write 1 AND ENSWINT = 1 Post an interrupt.
1	**DBC01**	Digital Basic Block type B, row 0, position 1. Read 0 No posted interrupt. Read 1 Posted interrupt present. Write 0 AND ENSWINT = 0 Clear posted interrupt if it exists. Write 1 AND ENSWINT = 0 No effect. Write 0 AND ENSWINT = 1 No effect. Write 1 AND ENSWINT = 1 Post an interrupt.
0	**DBC00**	Digital Basic Block type B, row 0, position 0. Read 0 No posted interrupt. Read 1 Posted interrupt present. Write 0 AND ENSWINT = 0 Clear posted interrupt if it exists. Write 1 AND ENSWINT = 0 No effect. Write 0 AND ENSWINT = 1 No effect. Write 1 AND ENSWINT = 1 Post an interrupt.

13.2.69 INT_CLR2

Interrupt Clear Register 2

Individual Register Names and Addresses:

INT_CLR2: 0,DCh

	7	6	5	4	3	2	1	0
Access : POR					RW : 0	RW : 0	RW : 0	RW : 0
Bit Name					DCC23	DCC22	DBC21	DBC20

This register is used to enable the individual interrupt sources' ability to clear posted interrupts for digital blocks.

When bits in this register are read, a '1' will be returned for every bit position that has a corresponding posted interrupt. When bits in this register are written with a '0' and ENSWINT is not set, posted interrupts will be cleared at the corresponding bit positions. If there was not a posted interrupt, there is no effect. When bits in this register are written with a '1' and ENSWINT is set, an interrupt is posted in the interrupt controller. Note that the ENSWINT bit is in the INT_MSK3 register on page 206. In the table, note that reserved bits are grayed table cells and are not described in the bit description section. Reserved bits should always be written with a value of '0'. For additional information, refer to the "Register Definitions" on page 68 in the Interrupt Controller chapter.

Bit	Name	Description
3	**DCC23**	Digital Communications Block type B, row 2, position 3. Read 0 No posted interrupt. Read 1 Posted interrupt present. Write 0 AND ENSWINT = 0 Clear posted interrupt if it exists. Write 1 AND ENSWINT = 0 No effect. Write 0 AND ENSWINT = 1 No effect. Write 1 AND ENSWINT = 1 Post an interrupt.
2	**DCC22**	Digital Communications Block type B, row 2, position 2. Read 0 No posted interrupt. Read 1 Posted interrupt present. Write 0 AND ENSWINT = 0 Clear posted interrupt if it exists. Write 1 AND ENSWINT = 0 No effect. Write 0 AND ENSWINT = 1 No effect. Write 1 AND ENSWINT = 1 Post an interrupt.
1	**DBC21**	Digital Basic Block type B, row 2, position 1. Read 0 No posted interrupt. Read 1 Posted interrupt present. Write 0 AND ENSWINT = 0 Clear posted interrupt if it exists. Write 1 AND ENSWINT = 0 No effect. Write 0 AND ENSWINT = 1 No effect. Write 1 AND ENSWINT = 1 Post an interrupt.
0	**DBC20**	Digital Basic Block type B, row 2, position 0. Read 0 No posted interrupt. Read 1 Posted interrupt present. Write 0 AND ENSWINT = 0 Clear posted interrupt if it exists. Write 1 AND ENSWINT = 0 No effect. Write 0 AND ENSWINT = 1 No effect. Write 1 AND ENSWINT = 1 Post an interrupt.

13.2.70 INT_CLR3

Interrupt Clear Register 3

Individual Register Names and Addresses:

INT_CLR3: 0,DDh

	7	6	5	4	3	2	1	0
Access : POR			RW : 0	RW : 0	RW : 0	RW : 0	RW : 0	RW : 0
Bit Name			Analog 5	Analog 4	RTC	SARADC	I2C1	I2C0

This register is used to enable the individual interrupt sources' ability to clear posted interrupts for analog column 5/4, RTC, SARADC and I^2Cs.

When bits in this register are read, a '1' will be returned for every bit position that has a corresponding posted interrupt. When bits in this register are written with a '0' and ENSWINT is cleared, any posted interrupt will be cleared. If there was not a posted interrupt, there is no effect. When bits in this register are written with a '1' and ENSWINT is set, an interrupt is posted in the interrupt controller. In the table, note that reserved bits are grayed table cells and are not described in the bit description section. Reserved bits should always be written with a value of '0'. In the table, note that reserved bits are grayed table cells and are not described in the bit description section. Reserved bits should always be written with a value of '0'. For additional information, refer to the "Register Definitions" on page 68 in the Interrupt Controller chapter.

Bit	Name	Description
5	**Analog 5**	Read 0 No posted interrupt for analog column 5. Read 1 Posted interrupt present for analog column 5. Write 0 AND ENSWINT = 0 Clear posted interrupt if it exists. Write 1 AND ENSWINT = 0 No effect. Write 0 AND ENSWINT = 1 No effect. Write 1 AND ENSWINT = 1 Post an interrupt for analog column 5.
4	**Analog 4**	Read 0 No posted interrupt for analog column 4. Read 1 Posted interrupt present for analog column 4. Write 0 AND ENSWINT = 0 Clear posted interrupt if it exists. Write 1 AND ENSWINT = 0 No effect. Write 0 AND ENSWINT = 1 No effect. Write 1 AND ENSWINT = 1 Post an interrupt for analog column 4.
3	**RTC**	Read 0 No posted interrupt for RTC. Read 1 Posted interrupt present for RTC. Write 0 AND ENSWINT = 0 Clear posted interrupt if it exists. Write 1 AND ENSWINT = 0 No effect. Write 0 AND ENSWINT = 1 No effect. Write 1 AND ENSWINT = 1 Post an interrupt for RTC.
2	**SARADC**	Read 0 No posted interrupt for SARADC. Read 1 Posted interrupt present for SARADC. Write 0 AND ENSWINT = 0 Clear posted interrupt if it exists. Write 1 AND ENSWINT = 0 No effect. Write 0 AND ENSWINT = 1 No effect. Write 1 AND ENSWINT = 1 Post an interrupt for SARADC.

(continued on next page)

13.2.70 INT_CLR3 *(continued)*

1	**I2C1**	Read 0 No posted interrupt for I2C1. Read 1 Posted interrupt present for I2C1. Write 0 AND ENSWINT = 0 Clear posted interrupt if it exists. Write 1 AND ENSWINT = 0 No effect. Write 0 AND ENSWINT = 1 No effect. Write 1 AND ENSWINT = 1 Post an interrupt for I2C1.
0	**I2C0**	Read 0 No posted interrupt for I2C0. Read 1 Posted interrupt present for I2C0. Write 0 AND ENSWINT = 0 Clear posted interrupt if it exists. Write 1 AND ENSWINT = 0 No effect. Write 0 AND ENSWINT = 1 No effect. Write 1 AND ENSWINT = 1 Post an interrupt for I2C0.

13.2.71 INT_MSK3

Interrupt Mask Register 3

Individual Register Names and Addresses:

INT_MSK3: 0,DEh

	7	6	5	4	3	2	1	0
Access : POR	RW : 0		RW : 0	RW : 0	RW : 0	RW : 0	RW : 0	RW : 0
Bit Name	ENSWINT		Analog 5	Analog 4	RTC	SARADC	I2C1	I2C0

This register is used to enable the individual sources' ability to create pending interrupts.

When an interrupt is masked off, the mask bit is '0'. The interrupt will still post in the interrupt controller. Therefore, clearing the mask bit only prevents a posted interrupt from becoming a pending interrupt. In the table, note that reserved bits are grayed table cells and are not described in the bit description section. Reserved bits should always be written with a value of '0'. For additional information, refer to the "Register Definitions" on page 68 in the Interrupt Controller chapter.

Bit	Name	Description	
7	**ENSWINT**	0	Disable software interrupts.
		1	Enable software interrupts.
5	**Analog 5**	0	Mask Analog 5 interrupt
		1	Unmask Analog 5 interrupt
4	**Analog 4**	0	Mask Analog 4 interrupt
		1	Unmask Analog 4 interrupt
3	**RTC**	0	Mask RTC interrupt
		1	Unmask RTC interrupt
2	**SARADC**	0	Mask SARADC interrupt
		1	Unmask SARADC interrupt
1	**I2C1**	0	Mask I2C1 interrupt
		1	Unmask I2C1 interrupt
0	**I2C0**	0	Mask I2C0 interrupt
		1	Unmask I2C0 interrupt

13.2.72 INT_MSK2

Interrupt Mask Register 2

Individual Register Names and Addresses:

INT_MSK2: 0,DFh

	7	6	5	4	3	2	1	0
Access : POR					RW : 0	RW : 0	RW : 0	RW : 0
Bit Name					DCC23	DCC22	DBC21	DBC20

This register is used to enable the individual sources' ability to create pending interrupts for digital blocks.

When an interrupt is masked off in this register, the mask bit is '0'. The interrupt will still post in the interrupt controller. Therefore, clearing the mask bit only prevents a posted interrupt from becoming a pending interrupt. In the table, note that reserved bits are grayed table cells and are not described in the bit description section. Reserved bits should always be written with a value of '0'. For additional information, refer to the "Register Definitions" on page 68 in the Interrupt Controller chapter.

Bit	Name	Description	
3	**DCC23**	0	Mask Digital Communication Block, row 2, position 3 interrupt.
		1	Unmask Digital Communication Block, row 2, position 3 interrupt.
2	**DCC22**	0	Mask Digital Communication Block, row 2, position 2 interrupt.
		1	Unmask Digital Communication Block, row 2, position 2 interrupt.
1	**DBC21**	0	Mask Digital Basic Block, row 2, position 1 interrupt.
		1	Unmask Digital Basic Block, row 2, position 1 interrupt.
0	**DBC20**	0	Mask Digital Basic Block, row 2, position 0 interrupt.
		1	Unmask Digital Basic Block, row 2, position 0 interrupt.

13.2.73 INT_MSK0

Interrupt Mask Register 0

Individual Register Names and Addresses:

INT_MSK0: 0,E0h

	7	6	5	4	3	2	1	0
Access : POR	RW : 0	RW : 0	RW : 0	RW : 0	RW : 0	RW : 0	RW : 0	RW : 0
Bit Name	VC3	Sleep	GPIO	Analog 3	Analog 2	Analog 1	Analog 0	V Monitor

This register is used to enable the individual sources' ability to create pending interrupts.

This register is used to enable the individual sources' ability to create pending interrupts. When an interrupt is masked off, the mask bit is '0'. The interrupt will still post in the interrupt controller. Therefore, clearing the mask bit only prevents a posted interrupt from becoming a pending interrupt. For additional information, refer to the "Register Definitions" on page 68 in the Interrupt Controller chapter.

Bit	Name	Description	
7	**VC3**	0 1	Mask VC3 interrupt. Unmask VC3 interrupt.
6	**Sleep**	0 1	Mask sleep interrupt. Unmask sleep interrupt.
5	**GPIO**	0 1	Mask GPIO interrupt. Unmask GPIO interrupt.
4	**Analog 3**	0 1	Mask analog interrupt, column 3. Unmask analog interrupt.
3	**Analog 2**	0 1	Mask analog interrupt, column 2. Unmask analog interrupt.
2	**Analog 1**	0 1	Mask analog interrupt, column 1. Unmask analog interrupt.
1	**Analog 0**	0 1	Mask analog interrupt, column 0. Unmask analog interrupt.
0	**V Monitor**	0 1	Mask voltage monitor interrupt. Unmask voltage monitor interrupt.

13.2.74 INT_MSK1

Interrupt Mask Register 1

Individual Register Names and Addresses:

INT_MSK1: 0,E1h

	7	6	5	4	3	2	1	0
Access : POR	RW : 0	RW : 0	RW : 0	RW : 0	RW : 0	RW : 0	RW : 0	RW : 0
Bit Name	DCC13	DCC12	DBC11	DBC10	DCC03	DCC02	DBC01	DBC00

This register is used to enable the individual sources' ability to create pending interrupts for digital blocks.

When an interrupt is masked off, the mask bit is '0'. The interrupt will still post in the interrupt controller. Therefore, clearing the mask bit only prevents a posted interrupt from becoming a pending interrupt. For additional information, refer to the "Register Definitions" on page 68 in the Interrupt Controller chapter.

Bit	Name	Description	
7	**DCC13**	0	Mask Digital Communication Block, row 1, position 3 interrupt.
		1	Unmask Digital Communication Block, row 1, position 3 interrupt.
6	**DCC12**	0	Mask Digital Communication Block, row 1, position 2 interrupt.
		1	Unmask Digital Communication Block, row 1, position 2 interrupt.
5	**DBC11**	0	Mask Digital Basic Block, row 1, position 1interrupt.
		1	Unmask Digital Basic Block, row 1, position 1 interrupt.
4	**DBC10**	0	Mask Digital Basic Block, row 1, position 0 interrupt.
		1	Unmask Digital Basic Block, row 1, position 0 interrupt.
3	**DCC03**	0	Mask Digital Communication Block, row 0, position 3 off.
		1	Unmask Digital Communication Block, row 0, position 3.
2	**DCC02**	0	Mask Digital Communication Block, row 0, position 2 off.
		1	Unmask Digital Communication Block, row 0, position 2.
1	**DBC01**	0	Mask Digital Basic Block, row 0, position 1 off.
		1	Unmask Digital Basic Block, row 0, position 1.
0	**DBC00**	0	Mask Digital Basic Block, row 0, position 0 off.
		1	Unmask Digital Basic Block, row 0, position 0.

13.2.75 INT_VC

Interrupt Vector Clear Register

Individual Register Names and Addresses:

INT_VC: 0,E2h

	7	6	5	4	3	2	1	0
Access : POR	RC : 00							
Bit Name	Pending Interrupt[7:0]							

This register returns the next pending interrupt and clears all pending interrupts when written.

For additional information, refer to the “Register Definitions” on page 68 in the Interrupt Controller chapter.

Bit	Name	Description	
7:0	**Pending Interrupt[7:0]**	Read	Returns vector for highest priority pending interrupt.
		Write	Clears all pending and posted interrupts.

13.2.76 RES_WDT

Reset Watchdog Timer Register

Individual Register Names and Addresses:

RES_WDT: 0,E3h

	7	6	5	4	3	2	1	0
Access : POR	W : 00							
Bit Name	WDSL_Clear[7:0]							

This register is used to clear the watchdog timer and clear both the watchdog timer and the sleep timer.

For additional information, refer to the “Register Definitions” on page 99 in the Sleep and Watchdog chapter.

Bit	Name	Description
7:0	**WDSL_Clear[7:0]**	Any write clears the watchdog timer. A write of 38h clears both the watchdog and sleep timers.

13.2.77 DEC_CR0

Decimator Global Control Register 0

Individual Register Names and Addresses:

DEC_CR0: 0,E6h

	7	6	5	4	3	2	1	0
Access : POR	RW : 00							
Bit Name	ACC_IGEN[3:0]				ICLKS[0]	ACE_IGEN[1:0]		DCLKS[0]

This register contains control bits for selecting the incremental gate enable signal and for selecting the decimator output latch signal.

For additional information, refer to the "Register Definitions" on page 488 in the Decimator chapter.

Bits	Name	Description
7:4	**ACC_IGEN[3:0]**	Incremental Gate Enable. Selects on a column basis which comparator outputs will be gated with the digital block source selected in ICLKS[3:0] 0001b Analog Column 0 0010b Analog Column 1 0100b Analog Column 2 1000b Analog Column 3
3	**ICLKS[0]**	Incremental Gate Source. Along with ICLKS3, ICLKS2, ICLKS1 in the DEC_CR1 register, this bit selects one of the digital blocks in the device. The bit value for a digital block number that does not exist in a specific PSoC should be considered reserved. 0000b Digital block 02 1000b Digital block 22 0001b Digital block 12 1001b Digital block 32 0010b Digital block 01 1010b Digital block 21 0011b Digital block 11 1011b Digital block 31 0100b Digital block 00 1100b Digital block 20 0101b Digital block 10 1101b Digital block 30 0110b Digital block 03 1110b Digital block 23 0111b Digital block 13 1111b Digital block 33
2:1	**ACE_IGEN[1:0]**	Incremental Gate Enable. Selects on a Type E column basis which Type E comparator outputs will be gated with the Digital block source selected in ICLKS[3:0] 01 Analog Type E column 0 10 Analog Type E column 1
0	**DCLKS[0]**	Decimator Latch Select. Along with DCLKS3, DCLKS2, and DCLKS1 in the DEC_CR1 register, this bit selects any one of the digital blocks in the device. 0000b Digital block 02 1000b Digital block 22 0001b Digital block 12 1001b Digital block 32 0010b Digital block 01 1010b Digital block 21 0011b Digital block 11 1011b Digital block 31 0100b Digital block 00 1100b Digital block 20 0101b Digital block 10 1101b Digital block 30 0110b Digital block 03 1110b Digital block 23 0111b Digital block 13 1111b Digital block 33 **Note** If the decimation rate bits in DECx_CR are set then this setting is overwritten

13.2.78 DEC_CR1

Decimator Global Control Register 1

Individual Register Names and Addresses:

DEC_CR1: 0,E7h

	7	6	5	4	3	2	1	0
Access : POR	RW : 00							
Bit Name		IDEC	ICLKS[3]	ICLKS[2]	ICLKS[1]	DCLKS[3]	DCLKS[2]	DCLKS[1]

This register is used to configure the incremental gate enable signal, and the decimator output latch.

In the table, note that reserved bits are grayed table cells and are not described in the bit description section. Reserved bits should always be written with a value of '0'. For additional information, refer to the "Register Definitions" on page 488 in the Decimator chapter.

Bits	Name	Description
6	**IDEC**	Invert the Digital Block Latch Control (selected by DCLKS3, DCLKS2, DCLKS1, and DCLKS0). 0 Non-Inverted 1 Inverted
5:3	ICLKS[3:1]	Incremental Gate Source. Along with ICLKS[0] in DEC_CR0, selects any one of the digital blocks in the device to gate the output of a analog column comparator If the IGEN bit for that column is set in DEC_CR0. The bit value for a digital block that does not exist should be considered reserved. 0000b Digital block 02 1000b Digital block 22 0001b Digital block 12 1001b Digital block 32 0010b Digital block 01 1010b Digital block 21 0011b Digital block 11 1011b Digital block 31 0100b Digital block 00 1100b Digital block 20 0101b Digital block 10 1101b Digital block 30 0110b Digital block 03 1110b Digital block 23 0111b Digital block 13 1111b Digital block 33
2:0	**DCLKS[3:1]**	Decimator Latch Select. Along with DCLKS0 in DEC_CR0, selects any one of the digital blocks in the device, as the source for the decimator output latch. The bit value for a digital block that does not exist should be considered reserved. 0000b Digital block 02 1000b Digital block 22 0001b Digital block 12 1001b Digital block 32 0010b Digital block 01 1010b Digital block 21 0011b Digital block 11 1011b Digital block 31 0100b Digital block 00 1100b Digital block 20 0101b Digital block 10 1101b Digital block 30 0110b Digital block 03 1110b Digital block 23 0111b Digital block 13 1111b Digital block 33 **Note** If the decimation rate bits in DECx_CR are set, then this setting is overwritten.

13.2.79 CPU_F

M8C Flag Register

Individual Register Names and Addresses:

CPU_F: x,F7h

	7	6	5	4	3	2	1	0
Access : POR	RL : 0			RL : 0		RL : 0	RL : 0	RL : 0
Bit Name	PgMode[1:0]			XIO		Carry	Zero	GIE

This register provides read access to the M8C flags.

The AND f, expr; OR f, expr; and XOR f, expr flag instructions can be used to modify this register. In the table, note that reserved bits are grayed table cells and are not described in the bit description section. Reserved bits should always be written with a value of '0'. For additional information, refer to the "Register Definitions" on page 48 in the M8C chapter and the "Register Definitions" on page 68 in the Interrupt Controller chapter.

Bit	Name	Description	
7:6	**PgMode[1:0]**	00b	Direct Address mode and Indexed Address mode operands are referred to RAM Page 0, regardless of the values of CUR_PP and IDX_PP. Note that this condition prevails on entry to an Interrupt Service Routine when the CPU_F register is cleared.
		01b	Direct Address mode instructions are referred to page 0. Indexed Address mode instructions are referred to the RAM page specified by the stack page pointer, STK_PP.
		10b	Direct Address mode instructions are referred to the RAM page specified by the current page pointer, CUR_PP. Indexed Address mode instructions are referred to the RAM page specified by the index page pointer, IDX_PP.
		11b	Direct Address mode instructions are referred to the RAM page specified by the current page pointer, CUR_PP. Indexed Address mode instructions are referred to the RAM page specified by the stack page pointer, STK_PP.
4	**XIO**	0	Normal register address space
		1	Extended register address space. Primarily used for configuration.
2	**Carry**	Set by the M8C CPU Core to indicate whether there has been a carry in the previous logical/arithmetic operation.	
		0	No carry
		1	Carry
1	**Zero**	Set by the M8C CPU Core to indicate whether there has been a zero result in the previous logical/arithmetic operation.	
		0	Not equal to zero
		1	Equal to zero
0	**GIE**	0	M8C will not process any interrupts.
		1	Interrupt processing enabled.

13.2.80 IDACx_D

IDAC Data Register

Individual Register Names and Addresses:

IDAC1_D : 0,FCh IDAC0_D : 0,FDh

	7	6	5	4	3	2	1	0
Access : POR	RW : 00							
Bit Name	IDACx							

This register specifies the 8-bit multiplying factor that determines the output DAC current.

For additional information, refer to the “Register Definitions” on page 528 in the I/O Analog Multiplexer chapter.

Bits	Name	Description
7:0	**IDACx**	This 8-bit value selects the number of current units that combine to form the DAC current. This current then drives the analog mux bus when DAC mode is enabled in the IDAC_CRx register. For example, a setting of 80h means that the charging current will be 128 current units. The current unit size depends on the range setting in the IDAC_CRx register.

13.2.81 CPU_SCR1

System Status and Control Register 1

Individual Register Names and Addresses:

CPU_SCR1: x,FEh

	7	6	5	4	3	2	1	0
Access : POR	R : 0			RW : 0	R : 0	RW : 0		RW : 0
Bit Name	IRESS			SLIMO	ECO EXW	ECO EX		IRAMDIS

This register is used to convey the status and control of events related to internal resets and watchdog reset.

In the table, note that reserved bits are grayed table cells and are not described in the bit description section. Reserved bits should always be written with a value of '0'. For additional information, refer to the "Register Definitions" on page 54 in the SROM chapter or "Register Definitions" on page 89 of the External Crystal Oscillator (ECO) chapter.

Bit	Name	Description
7	**IRESS**	This bit is read only. 0 Boot phase only executed once. 1 Boot phase occurred multiple times.
4	**SLIMO**	Reduces frequency of the internal main oscillator (IMO). 0 IMO produces 24 MHz 1 Slow IMO (6 MHz)
3	**ECO EXW**	ECO Exists Written. 1 The ECO Exists Written bit has been written with a '1' or '0' and is now locked. 0 The ECO Exists Written bit has never been written in User mode.
2	**ECO EX**	ECO Exists (write once – see the explanation in "Register Definitions" on page 99). 1 ECO operation exists (set/reset OSC_CR[7] to enable/disable). 0 ECO operation does not exist. 32 kHz clock source is locked to operate from the ILO.
0	**IRAMDIS**	0 SRAM is initialized to 00h after POR, XRES, and WDR. 1 Addresses 03h to D7h of SRAM Page 0 are not modified by WDR.

13.2.82 CPU_SCR0

System Status and Control Register 0

Individual Register Names and Addresses:

CPU_SCR0: x,FFh

	7	6	5	4	3	2	1	0
Access : POR	R : 0		RC : 0	RC : 1	RW : 0			RW : 0
Bit Name	GIES		WDRS	PORS	Sleep			STOP

This register is used to convey the status and control of events for various functions of a PSoC device.

In the table, note that reserved bits are grayed table cells and are not described in the bit description section. Reserved bits should always be written with a value of ‘0’. For additional information, refer to the “Register Definitions” on page 99 in the Sleep and Watchdog chapter.

Bit	Name	Description
7	**GIES**	Global interrupt enable status. It is recommended that the user read the Global Interrupt Enable Flag bit from the CPU_F register on page 214. This bit is Read Only for GIES. Its use is discouraged, as the Flag register is now readable at address x,F7h (read only).
5	**WDRS**	Watchdog Reset Status. This bit may not be set by user code; however, it may be cleared by writing it with a ‘0’. 0 No Watchdog Reset has occurred. 1 Watchdog Reset has occurred.
4	**PORS**	Power On Reset Status. This bit may not be set by user code; however, it may be cleared by writing it with a ‘0’. 0 Power On Reset has not occurred and watchdog timer is enabled. 1 Will be set after external reset or Power On Reset.
3	**Sleep**	Set by the user to enable the CPU sleep state. CPU will remain in Sleep mode until any interrupt is pending. 0 Normal operation 1 Sleep
0	**STOP**	0 M8C is free to execute code. 1 M8C is halted. Can only be cleared by POR, XRES, or WDR.

13.3 Bank 1 Registers

The following registers are all in bank 1 and are listed in address order. Registers that are in both Bank 0 and Bank 1 are listed in address order in the section titled “Bank 0 Registers” on page 127.

13.3.1 PRTxDM0

Port Drive Mode Bit Register 0

Individual Register Names and Addresses:

PRT0DM0 : 1,00h PRT1DM0 : 1,04h PRT2DM0 : 1,08h PRT3DM0 : 1,0Ch
PRT4DM0 : 1,10h PRT5DM0 : 1,14h

	7	6	5	4	3	2	1	0
Access : POR	RW : 0							
Bit Name	Drive Mode 0[7:0]							

This register is one of three registers whose combined value determines the unique Drive mode of each bit in a GPIO port.

In register PRTxDM0 there are eight possible drive modes for each port pin. Three mode bits are required to select one of these modes, and these three bits are spread into three different registers (PRTxDM0, “PRTxDM1” on page 219, and “PRTxDM2” on page 130). The bit position of the effected port pin (for example, Pin[2] in Port 0) is the same as the bit position of each of the three Drive Mode register bits that control the Drive mode for that pin (for example, Bit[2] in PRT0DM0, bit[2] in PRT0DM1, and bit[2] in PRT0DM2). The three bits from the three registers are treated as a group. These are referred to as DM2, DM1, and DM0, or together as DM[2:0].

All Drive mode bits are shown in the sub-table below ([21**0**] refers to the combination (in order) of bits in a given bit position); however, this register only controls the ***least significant bit (LSb)*** of the Drive mode.

For Port 5, the upper nibble of this register will return the last data bus value when read and should be masked off prior to using this information. For additional information, refer to the “Register Definitions” on page 76 in the GPIO chapter.

Bit	Name	Description
7:0	**Drive Mode 0[7:0]**	Bit 0 of the Drive mode, for each of 8-port pins, for a GPIO port.

[21*0*]	**Pin Output High**	**Pin Output Low**	**Notes**
00**0**b	Strong	Resistive	
00**1**b	Strong	Strong	
01**0**b	High-Z	High-Z	Digital input enabled.
01**1**b	Resistive	Strong	
10**0**b	Slow + strong	High-Z	
10**1**b	Slow + strong	Slow + strong	
11**0**b	High-Z	High-Z	Reset state. Digital input disabled for zero power.
11**1**b	High-Z	Slow + strong	I^2C Compatible mode.

Note A bold digit, in the table, signifies that the digit is used in this register.

13.3.2 PRTxDM1

Port Drive Mode Bit Register 1

Individual Register Names and Addresses:

PRT0DM1 : 1,01h PRT1DM1 : 1,05h PRT2DM1 : 1,09h PRT3DM1 : 1,0Dh
PRT4DM1 : 1,11h PRT5DM1 : 1,15h

	7	6	5	4	3	2	1	0
Access : POR	RW : FFh							
Bit Name	Drive Mode 1[7:0]							

This register is one of three registers whose combined value determines the unique Drive mode of each bit in a GPIO port.

In register PRTxDM1 there are eight possible drive modes for each port pin. Three mode bits are required to select one of these modes, and these three bits are spread into three different registers ("PRTxDM0" on page 218, PRTxDM1, and "PRTxDM2" on page 130). The bit position of the effected port pin (for example, Pin[2] in Port 0) is the same as the bit position of each of the three Drive Mode register bits that control the Drive mode for that pin (for example, Bit[2] in PRT0DM0, bit[2] in PRT0DM1, and bit[2] in PRT0DM2). The three bits from the three registers are treated as a group. These are referred to as DM2, DM1, and DM0, or together as DM[2:0].

All Drive mode bits are shown in the sub-table below ([2**1**0] refers to the combination (in order) of bits in a given bit position); however, this register only controls the middle bit of the Drive mode.

For Port 5, the upper nibble of this register will return the last data bus value when read and should be masked off prior to using this information. For additional information, refer to the "Register Definitions" on page 76 in the GPIO chapter.

Bit	Name	Description
7:0	**Drive Mode 1[7:0]**	Bit 1 of the Drive mode, for each of 8-port pins, for a GPIO port.

[2**1**0**]**	**Pin Output High**	**Pin Output Low**	**Notes**
0**0**0b	Strong	Resistive	
0**0**1b	Strong	Strong	
0**1**0b	High-Z	High-Z	Digital input enabled.
0**1**1b	Resistive	Strong	
1**0**0b	Slow + strong	High-Z	
1**0**1b	Slow + strong	Slow + strong	
1**1**0b	High-Z	High-Z	Reset state. Digital input disabled for zero power.
1**1**1b	High-Z	Slow + strong	I^2C Compatible mode.

Note A bold digit, in the table, signifies that the digit is used in this register.

13.3.3 PRTxIC0

Port Interrupt Control Register 0

Individual Register Names and Addresses:

PRT0IC0 : 1,02h PRT1IC0 : 1,06h PRT2IC0 : 1,0Ah PRT3IC0 : 1,0Eh
PRT4IC0 : 1,12h PRT5IC0 : 1,16h

	7	6	5	4	3	2	1	0
Access : POR	RW : 00							
Bit Name	Interrupt Control 0[7:0]							

This register is one of two registers whose combined value determine the unique Interrupt mode of each bit in a GPIO port.

In register PRTxIC0 there are four possible interrupt modes for each port pin. Two mode bits are required to select one of these modes and these two bits are spread into two different registers (PRTxIC0 and “PRTxIC1” on page 221). The bit position of the effected port pin (for example, Pin[2] in Port 0) is the same as the bit position of each of the interrupt control register bits that control the Interrupt mode for that pin (for example, Bit[2] in PRT0IC0 and bit[2] in PRT0IC1). The two bits from the two registers are treated as a group. In the sub-table below, “[**0**]” refers to the combination (in order) of bits in a given position, one bit from PRTxIC1 and one bit from PRTxIC0.

For Port 5, the upper nibble of this register will return the last data bus value when read and should be masked off prior to using this information. For additional information, refer to the “Register Definitions” on page 76 in the GPIO chapter.

Bit	Name	Description	
7:0	**Interrupt Control 0[7:0]**	[1**0**]	**Interrupt Type**
		0**0**b	Disabled
		0**1**b	Low
		1**0**b	High
	‘	1**1**b	Change from last read
		Note A bold digit, in the table, signifies that the digit is used in this register.	

13.3.4 PRTxIC1

Port Interrupt Control Register 1

Individual Register Names and Addresses:

PRT0IC1 : 1,03h
PRT1IC1 : 1,07h
PRT2IC1 : 1,0Bh
PRT3IC1 : 1,0Fh
PRT4IC1 : 1,13h
PRT5IC1 : 1,17h

	7	6	5	4	3	2	1	0
Access : POR	RW : 00							
Bit Name	Interrupt Control 1[7:0]							

This register is one of two registers whose combined value determine the unique Interrupt mode of each bit in a GPIO port.

In register PRTxIC1 there are four possible interrupt modes for each port pin. Two mode bits are required to select one of these modes and these two bits are spread into two different registers (“PRTxIC0” on page 220 and PRTxIC1). The bit position of the effected port pin (for example, Pin[2] in Port 0) is the same as the bit position of each of the interrupt control register bits that control the Interrupt mode for that pin (for example, Bit[2] in PRT0IC0 and bit[2] in PRT0IC1). The two bits from the two registers are treated as a group. In the sub-table below, “[**1**]” refers to the combination (in order) of bits in a given position, one bit from PRTxIC1 and one bit from PRTxIC0.

For Port 5, the upper nibble of this register will return the last data bus value when read and should be masked off prior to using this information. For additional information, refer to the “Register Definitions” on page 76 in the GPIO chapter.

Bit	Name	Description	
7:0	**Interrupt Control 1[7:0]**	[**1**0]	**Interrupt Type**
		00b	Disabled
		01b	Low
		10b	High
	‘	**1**1b	Change from last read
		Note A bold digit, in the table, signifies that the digit is used in this register.	

13.3.5 DxCxxFN

Digital Basic/Communications Type C Block Function Register

Individual Register Names and Addresses:

DBC00FN : 1,20h	DBC01FN : 1,24h	DCC02FN : 1,28h	DCC03FN : 1,2Ch
DBC10FN : 1,30h	DBC11FN : 1,34h	DCC12FN : 1,38h	DCC13FN : 1,3Ch
DBC20FN : 1,40h	DBC21FN : 1,44h	DCC22FN : 1,48h	DCC23FN : 1,4Ch

	7	6	5	4	3	2	1	0
Access : POR	RW : 0	RW : 0	RW : 0	RW : 0		RW : 0		
Bit Name	Data Invert	BCEN	End Single	Mode[1:0]		Function[2:0]		

This register contains the primary Mode and Function bits that determine the function of the block.

Before changing any of the configuration registers (DxCxxFN, DxCxxIN, and DxCxxOU), disable the corresponding digital block by setting bit 0 in the CR0 or DxCxxCR0 register to ‘0’. The values in the DxCxxFN register should not be changed while the block is enabled. After all configuration changes are made, enable the block by setting bit 0 in the DxCxxCR0 register to ‘1’.

The naming convention for this register is as follows. The first ‘x’ in the digital register’s name represents either “B” for basic or “C” for communication. For rows of digital PSoC blocks and their registers, the second ‘x’ set represents <Prefix>mn<Suffix>, where m = row index, n = column index. Therefore, DCC12FN is a digital communication register for a digital PSoC block in row 1 column 2. Depending on the digital row characteristics of your PSoC device, some addresses may not be available. For additional information, refer to the “Register Definitions” on page 348 in the Digital Blocks chapter.

Bit	Name	Description
7	**Data Invert**	0 Data input is non-inverted. 1 Data input is inverted.
6	**BCEN**	Enable Primary Function Output to drive the broadcast net. 0 Disable 1 Enable
5	**End Single**	0 Block is not the end of a chained function or the function is not chainable. 1 Block is the end of a chained function or a standalone block in a chainable function.
4:3	**Mode[1:0]**	These bits are function dependent and are described by function as follows.
	Timer or Counter:	Mode[0] signifies the interrupt type. 0 Interrupt on Terminal Count 1 Interrupt on Compare True Mode[1] signifies the compare type. 0 Compare on Less Than or Equal 1 Compare on Less Than
	CRCPRS:	Mode[1:0] are encoded as the Compare Type. 00b Compare on Equal 01b Compare on Less Than or Equal 10b Reserved 11b Compare on Less Than

(continued on next page)

13.3.5 DxCxxFN *(continued)*

4:3 *(cont.)*	PWMDBL	Same as Dead Band that follows:
	Dead Band:	Mode[1:0] are encoded as the Kill Type. 00b Synchronous Restart KILL mode 01b Disable KILL mode 10b Asynchronous KILL mode 11b Reserved
	UART:	Mode[0] signifies the Direction. 0 Receiver 1 Transmitter Mode[1] signifies the Interrupt Type. 0 Interrupt on TX Reg Empty 1 Interrupt on TX Complete
	SPI:	Mode[0] signifies the Type. 0 Master 1 Slave Mode[1] signifies the Interrupt Type. 0 Interrupt on TX Reg Empty 1 Interrupt on SPI Complete
	DSM	DSM Kill Mode 0 “KILL Async” Mode 1 “KILL Disable” Mode
	(Mode[0])	DSM Multiplication Mode 0 Density Multiplier for Single Reference 1 Density Multiplier for Bipolar Reference
2:0	**Function[2:0]**	000b Timer (chainable) 001b Counter (chainable) 010b CRCPRS (chainable) 011b PWMDBL 100b Dead Band 101b UART (DCCxx blocks only) 110b SPI (DCCxx blocks only) 111b DSM

13.3.6 DxCxxIN

Digital Basic/Communications Type C Block Input Register

Individual Register Names and Addresses:

DBC00IN : 1,21h	DBC01IN : 1,25h	DCC02IN : 1,29h	DCC03IN : 1,2Dh
DBC10IN : 1,31h	DBC11IN : 1,35h	DCC12IN : 1,39h	DCC13IN : 1,3Dh
DBC20IN : 1,41h	DBC21IN : 1,45h	DCC22IN : 1,49h	DCC23IN : 1,4Dh

	7	6	5	4	3	2	1	0
Access : POR	RW : 0				RW : 0			
Bit Name	Data Input[3:0]				Clock Input[3:0]			

These registers are used to select the data and clock inputs.

Before changing any of the configuration registers (DxCxxFN, DxCxxIN, and DxCxxOU), disable the corresponding digital block by setting bit 0 in the CR0 or DxCxxCR0 register to '0'. The values in this register should not be changed while the block is enabled. After all configuration changes are made, enable the block by setting bit 0 in the CR0 register to '1'.

The naming convention for this register is as follows. The first 'x' in the digital register's name represents either "B" for basic or "C" for communication. For rows of digital PSoC blocks and their registers, the second 'x' set represents <Prefix>mn<Suffix>, where m = row index, n = column index. Therefore, DCC12IN is a digital communication register for a digital PSoC block in row 1 column 2. Depending on the digital row characteristics of your PSoC device, some addresses may not be available. For additional information, refer to the "Register Definitions" on page 348 in the Digital Blocks chapter.

Bit	Name	Description	
7:4	**Data Input[3:0]**	0000b	Low (0)
		0001b	High (1)
		0010b	Row broadcast net
		0011b	Chain function to previous block (low (0) in block DBC00IN)
		0100b	Analog column comparator 0
		0101b	Analog column comparator 1
		0110b	Analog column comparator 2
		0111b	Analog column comparator 3
		1000b	Row output 0
		1001b	Row output 1
		1010b	Row output 2
		1011b	Row output 3
		1100b	Row input 0
		1101b	Row input 1
		1110b	Row input 2
		1111b	Row input 3

(continued on next page)

13.3.6 DxCxxIN *(continued)*

3:0	**Clock Input[3:0]**	0000b	Clock disabled (low)
		0001b	VC3
		0010b	Row broadcast net
		0011b	Previous block primary output (low for DBC00)
		0100b	SYSCLKX2
		0101b	VC1
		0110b	VC2
		0111b	CLK32K
		1000b	Row output 0
		1001b	Row output 1
		1010b	Row output 2
		1011b	Row output 3
		1100b	Row input 0
		1101b	Row input 1
		1110b	Row input 2
		1111b	Row input 3

13.3.7 DxCxxOU

Digital Basic/Communications Type C Block Output Register

Individual Register Names and Addresses:

DBC00OU : 1,22h	DBC01OU : 1,26h	DCC02OU : 1,2Ah	DCC03OU : 1,2Eh
DBC10OU : 1,32h	DBC11OU : 1,36h	DCC12OU : 1,3Ah	DCC13OU : 1,3Eh
DBC20OU : 1,42h	DBC21OU : 1,46h	DCC22OU : 1,4Ah	DCC23OU : 1,4Eh

	7	6	5	4	3	2	1	0
Access : POR	RW : 0		RW : 0	RW : 0		RW : 0	RW : 0	
Bit Name	AUXCLK		AUXEN	AUX IO Select[1:0]		OUTEN	Output Select[1:0]	

This register is used to control the connection of digital block outputs to the available row interconnect and control clock resynchronization.

Before changing any of the configuration registers (DxCxxFN, DxCxxIN, and DxCxxOU), disable the corresponding digital block by setting bit 0 in the CR0 or DxCxxCR0 register to '0'. The values in this register should not be changed while the block is enabled. After all configuration changes are made, enable the block by setting bit 0 in the DxCxxCR0 register to '1'.

The naming convention for this register is as follows. The first 'x' in the digital register's name represents either "B" for basic or "C" for communication. For rows of digital PSoC blocks and their registers, the second 'x' set represents <Prefix>mn<Suffix>, where m = row index, n = column index. Therefore, DBC12OU is a digital basic register for a digital PSoC block in row 1 column 2. Depending on the digital row characteristics of your PSoC device, some addresses may not be available. For additional information, refer to the "Register Definitions" on page 348 in the Digital Blocks chapter.

Bit	Name	Description
7:6	**AUXCLK**	00b No sync 16-to-1 clock mux output 01b Synchronize Output of 16-to-1 clock mux to SYSCLK 10b Synchronize Output of 16-to-1 clock mux to SYSCLKX2 11b SYSCLK Directly connect SYSCLK to block clock input
5	**AUXEN**	Auxiliary I/O Enable (function dependent) All Functions except SPI Slave: Enable Auxiliary Output Driver 0 Disabled 1 Enabled SPI Slave: Input Source for SS_ 0 Row Input [3:0], as selected by the AUX IO Select bits 1 Force SS_ Active
4:3	**AUX IO Select[1:0]**	Auxiliary I/O Select Function Output (function dependent) All Functions except SPI Slave: Row Output Select 00b Row Output 0 01b Row Output 1 10b Row Output 2 11b Row Output 3 SPI Slave Source for SS_ Input if AUXEN =0. 00b Row Input 0 01b Row Input 1 10b Row Input 2 11b Row Input 3

(continued on next page)

13.3.7 DxCxxOU *(continued)*

4:3 *(cont.)*	**AUX IO Select[1:0]**	SPI Slave Source for SS_ Input if AUXEN =1. 00b Force SS_ Active 01b Reserved 10b Reserved 11b Reserved
2	**OUTEN**	Enable Primary Function Output Driver 0 Disabled 1 Enabled
1:0	**Output Select[1:0]**	Row Output Select for Primary Function Output 00b Row Output 0 01b Row Output 1 10b Row Output 2 11b Row Output 3

13.3.8 DxCxxCR1 (Timer Control:000)

Digital Basic/Communication Type C Block Control Register 1

Individual Register Names and Addresses:

DBC00CR1 : 1,23h	DBC01CR1 : 1,27h	DCC02CR1 : 1,2Bh	DCC03CR1 : 1,2Fh
DBC10CR1 : 1,33h	DBC11CR1 : 1,37h	DCC12CR1 : 1,3Bh	DCC13CR1 : 1,3Fh
DBC20CR1 : 1,43h	DBC21CR1 : 1,47h	DCC22CR1 : 1,4Bh	DCC23CR1 : 1,4Fh

	7	6	5	4	3	2	1	0
Access : POR	RW : 0000				RW : 0	RW : 00		RW : 0
Bit Name	Multi-Shot				KILL_INV	KILL_MD[1:0]		KILL_INT

This register is the second Control register for a Timer, if the DxCxxFN register is configured as a ‘000’.

For additional information, refer to the “Register Definitions” on page 348 in the Digital Blocks chapter.

Bit	Name	Description
7:4	**Multi-Shot == 0**	No Multi-shot function, and function will run repeatedly.
	Multi-Shot > 0	Multi-shot number.
3	**KILL_INV**	0 Normal Kill signal 1 Invert Kill signal
2:1	**KILL_MD[1:0]**	KILL mode. 0Xb NO KILL mode. 10b "Kill Sync" mode: When the kill signal is asserted the DR0 Register is reloaded on every block clock. The multi-shot counter is reloaded on the first rising edge of the block clock after the kill signal is deasserted. This is also when the down counter starts counting again. When the kill signal is asserted both digital block outputs are held low. 11b "Kill Disable" mode: The block is immediately disabled when the kill signal is asserted. Both block outputs are held low. The block must be restarted in firmware.
0	**KILL_INT**	0 Kill signal is not interrupt source 1 Kill signal is interrupt source and has highest priority

13.3.9 DxCxxCR1 (Counter Control:001)

Digital Basic/Communication Type C Block Control Register 1

Individual Register Names and Addresses:

DBC00CR1 : 1,23h	DBC01CR1 : 1,27h	DCC02CR1 : 1,2Bh	DCC03CR1 : 1,2Fh
DBC10CR1 : 1,33h	DBC11CR1 : 1,37h	DCC12CR1 : 1,3Bh	DCC13CR1 : 1,3Fh
DBC20CR1 : 1,43h	DBC21CR1 : 1,47h	DCC22CR1 : 1,4Bh	DCC23CR1 : 1,4Fh

	7	6	5	4	3	2	1	0
Access : POR	RW : 0000				RW : 0	RW : 00		RW : 0
Bit Name	Multi-Shot				KILL_INV	KILL_MD[1:0]		KILL_INT

This register is the second Control register for a Counter, if the DxCxxFN register is configured as a ‘001’.

For additional information, refer to the “Register Definitions” on page 348 in the Digital Blocks chapter.

Bit	Name	Description
7:4	**Multi-Shot**	Has same meaning as in Timer.
3	**KILL_INV**	Same as Timer.
2:1	**KILL_MD[1:0]**	Same as Timer.
0	**KILL_INT**	Same as Timer.

13.3.10 DxCxxCR1 (CRCPRS Control:010)

Digital Basic/Communication Type C Block Control Register 1

Individual Register Names and Addresses:

DBC00CR1 : 1,23h	DBC01CR1 : 1,27h	DCC02CR1 : 1,2Bh	DCC03CR1 : 1,2Fh
DBC10CR1 : 1,33h	DBC11CR1 : 1,37h	DCC12CR1 : 1,3Bh	DCC13CR1 : 1,3Fh
DBC20CR1 : 1,43h	DBC21CR1 : 1,47h	DCC22CR1 : 1,4Bh	DCC23CR1 : 1,4Fh

	7	6	5	4	3	2	1	0
Access : POR	RW : 0000				RW : 0	RW : 00		RW : 0
Bit Name	Multi-Shot				KILL_INV	KILL_MD[1:0]		KILL_INT

This register is the second Control register for a CRCPRS, if the DxCxxFN register is configured as a ‘010’.

For additional information, refer to the “Register Definitions” on page 348 in the Digital Blocks chapter.

Bit	Name	Description
7:4	**Multi-Shot**	Has same meaning as in Timer.
3	**KILL_INV**	Same as Timer.
2:1	**KILL_MD[1:0]**	Same as Timer.
0	**KILL_INT**	Same as Timer.

13.3.11 DxCxxCR1 (PWMDBL Control:011)

Digital Basic/Communication Type C Block Control Register 1

Individual Register Names and Addresses:

DBC00CR1 : 1,23h	DBC01CR1 : 1,27h	DCC02CR1 : 1,2Bh	DCC03CR1 : 1,2Fh
DBC10CR1 : 1,33h	DBC11CR1 : 1,37h	DCC12CR1 : 1,3Bh	DCC13CR1 : 1,3Fh
DBC20CR1 : 1,43h	DBC21CR1 : 1,47h	DCC22CR1 : 1,4Bh	DCC23CR1 : 1,4Fh

	7	6	5	4	3	2	1	0
Access : POR	RW : 0000				RW : 0	RW : 000		
Bit Name	Multi-Shot				STARTINV	DBW[2:0]		

This register is the second Control register for a PWMDBL, if the DxCxxFN register is configured as a ‘011’.

For additional information, refer to the “Register Definitions” on page 348 in the Digital Blocks chapter.

Bit	Name	Description
7:4	**Multi-Shot**	Has same meaning as in Timer. 0 means the function is not in PPG mode. Otherwise the function is in PPG mode and the iteration time by one trigger is specified by these 4 multi-shot bits.
3	**STARTINV**	0 Normal Start signal 1 Invert Start signal
2:0	**DBW[2:0]**	Dead Band Width: 000b No Dead Band; 001b 1 BLKCLK Dead Band 010b 2 BLKCLK Dead Band; 011b 4 BLKCLK Dead Band 100b 8 BLKCLK Dead Band; 101b 16 BLKCLK Dead Band 110b 32 BLKCLK Dead Band; 111b 64 BLKCLK Dead Band

13.3.12 DxCxxCR1 (Dead Band Control:100)

Digital Basic/Communication Type C Block Control Register 1

Individual Register Names and Addresses:

DBC00CR1 : 1,23h	DBC01CR1 : 1,27h	DCC02CR1 : 1,2Bh	DCC03CR1 : 1,2Fh
DBC10CR1 : 1,33h	DBC11CR1 : 1,37h	DCC12CR1 : 1,3Bh	DCC13CR1 : 1,3Fh
DBC20CR1 : 1,43h	DBC21CR1 : 1,47h	DCC22CR1 : 1,4Bh	DCC23CR1 : 1,4Fh

	7	6	5	4	3	2	1	0
Access : POR								RW : 0
Bit Name								KILL_INT

This register is the second Control register for a Dead Band Generator, if the DxCxxFN register is configured as a ‘100’.

In the table, note that reserved bits are grayed table cells and are not described in the bit description section. Reserved bits should always be written with a value of ‘0’. For additional information, refer to the “Register Definitions” on page 348 in the Digital Blocks chapter.

Bit	Name	Description	
0	**KILL_INT**	0	Kill signal is not interrupt source.
		1	Kill signal is interrupt source, and has highest priority.

13.3.13 DxCxxCR1 (SPIM Control:0-110)

Digital Basic/Communication Type C Block Control Register 1

Individual Register Names and Addresses:

DBC00CR1 : 1,23h	DBC01CR1 : 1,27h	DCC02CR1 : 1,2Bh	DCC03CR1 : 1,2Fh
DBC10CR1 : 1,33h	DBC11CR1 : 1,37h	DCC12CR1 : 1,3Bh	DCC13CR1 : 1,3Fh
DBC20CR1 : 1,43h	DBC21CR1 : 1,47h	DCC22CR1 : 1,4Bh	DCC23CR1 : 1,4Fh

	7	6	5	4	3	2	1	0
Access : POR	RW : 0	RW : 0		RW : 00000				
Bit Name	Chain	LSB		SPI Length				

This register is the second Control register for a SPIM, if the DxCxxFN register is configured as a ‘110’.

In the table, note that reserved bits are grayed table cells and are not described in the bit description section. Reserved bits should always be written with a value of ‘0’. For additional information, refer to the “Register Definitions” on page 348 in the Digital Blocks chapter.

Bit	Name	Description
7	**Chain**	0 Block is not part of an SPI chain. 1 Block is in an SPI chain
6	**LSB**	0 Block is MSB in SPI chain. 1 Block is LSB in SPI chain. **Note** Bit 7 must be set to use this bit.
4:0	**SPI Length**	Specifies the SPI length in chain mode.

13.3.14 DxCxxCR1 (SPIS Control:0-110)

Digital Basic/Communication Type C Block Control Register 1

Individual Register Names and Addresses:

DBC00CR1 : 1,23h	DBC01CR1 : 1,27h	DCC02CR1 : 1,2Bh	DCC03CR1 : 1,2Fh
DBC10CR1 : 1,33h	DBC11CR1 : 1,37h	DCC12CR1 : 1,3Bh	DCC13CR1 : 1,3Fh
DBC20CR1 : 1,43h	DBC21CR1 : 1,47h	DCC22CR1 : 1,4Bh	DCC23CR1 : 1,4Fh

	7	6	5	4	3	2	1	0
Access : POR	RW : 0	RW : 0		RW : 00000				
Bit Name	Chain	LSB		SPI Length				

This register is the second Control register for a SPIS, if the DxCxxFN register is configured as a ‘110’.

In the table, note that reserved bits are grayed table cells and are not described in the bit description section. Reserved bits should always be written with a value of ‘0’. For additional information, refer to the “Register Definitions” on page 348 in the Digital Blocks chapter.

Bit	Name	Description
7	**Chain**	0 Block is not part of an SPI chain. 1 Block is in an SPI chain.
6	**LSB**	0 Block is MSB in SPI chain. 1 Block is LSB in SPI chain. **Note** Bit 7 must be set to use this bit
4:0	**SPI Length**	Specifies the SPI length in chain mode.

13.3.15 DxCxxCR1 (DSM Control:111)

Digital Basic/Communication Type C Block Control Register 1

Individual Register Names and Addresses:

DBC00CR1 : 1,23h	DBC01CR1 : 1,27h	DCC02CR1 : 1,2Bh	DCC03CR1 : 1,2Fh
DBC10CR1 : 1,33h	DBC11CR1 : 1,37h	DCC12CR1 : 1,3Bh	DCC13CR1 : 1,3Fh
DBC20CR1 : 1,43h	DBC21CR1 : 1,47h	DCC22CR1 : 1,4Bh	DCC23CR1 : 1,4Fh

	7	6	5	4	3	2	1	0
Access : POR					RW : 0			RW : 0
Bit Name					KILL_INV			KILL_INT

This register is the second Control register for a DSM, if the DxCxxFN register is configured as a ‘111’.

In the table, note that reserved bits are grayed table cells and are not described in the bit description section. Reserved bits should always be written with a value of ‘0’. For additional information, refer to the “Register Definitions” on page 348 in the Digital Blocks chapter.

Bit	Name	Description	
3	**KILL_INV**	0	Do not invert Kill signal.
		1	Invert Kill signal.
0	**KILL_INT**	0	Select CO as interrupt.
		1	Select KILL as interrupt.

13.3.16 CLK_CR0

Analog Column Clock Control Register 0

Individual Register Names and Addresses:

CLK_CR0: 1,60h

	7	6	5	4	3	2	1	0
Access : POR	RW : 0		RW : 0		RW : 0		RW : 0	
Bit Name	AColumn3[1:0]		AColumn2[1:0]		AColumn1[1:0]		AColumn0[1:0]	

This register is used to select the clock source for an individual analog column.

Each column has two bits that select the column clock input source. The resulting column clock frequency is the selected input clock frequency divided by four. For additional information, refer to the “Register Definitions” on page 400 in the Analog Interface chapter.

Bits	Name	Description
7:6	**AColumn3[1:0]**	Clock selection for column 3. 00b Variable Clock 1 (VC1) 01b Variable Clock 2 (VC2) 10b Analog Clock 0 (ACLK0) 11b Analog Clock 1 (ACLK1)
5:4	**AColumn2[1:0]**	Clock selection for column 2. 00b Variable Clock 1 (VC1) 01b Variable Clock 2 (VC2) 10b Analog Clock 0 (ACLK0) 11b Analog Clock 1 (ACLK1)
3:2	**AColumn1[1:0]**	Clock selection for column 1. 00b Variable Clock 1 (VC1) 01b Variable Clock 2 (VC2) 10b Analog Clock 0 (ACLK0) 11b Analog Clock 1 (ACLK1)
1:0	**AColumn0[1:0]**	Clock selection for column 0. 00b Variable Clock 1 (VC1) 01b Variable Clock 2 (VC2) 10b Analog Clock 0 (ACLK0) 11b Analog Clock 1 (ACLK1)

13.3.17 CLK_CR1

Analog Clock Source Control Register 1

Individual Register Names and Addresses:

CLK_CR1: 1,61h

	7	6	5	4	3	2	1	0
Access : POR		RW : 0	RW : 0			RW : 0		
Bit Name		SHDIS	ACLK1[2:0]			ACLK0[2:0]		

This register is used to select the clock source for an individual analog column.

There are two ranges of Digital PSoC blocks shown. The range is set by bits ACLK0R and ACLK1R in register CLK_CR2. In the table, note that reserved bits are grayed table cells and are not described in the bit description section. Reserved bits should always be written with a value of '0'. For additional information, refer to the "Register Definitions" on page 400 in the Analog Interface chapter.

Bits	Name	Description
6	**SHDIS**	Sample and hold disable. 0 Enabled 1 Disabled
5:3	**ACLK1[2:0]**	Select the clocking source for Analog Clock 1. 000b Digital Basic Block 00 or 20 001b Digital Basic Block 01 or 21 010b Digital Communication Block 02 or 22 011b Digital Communication Block 03 or 23 100b Digital Basic Block 10 101b Digital Basic Block 11 110b Digital Communication Block 12 111b Digital Communication Block 13 **Note** Selection determined by setting of ACLK1R.
2:0	**ACLK0[2:0]**	Select the clocking source for Analog Clock 0. 000b Digital Basic Block 00 or 20 001b Digital Basic Block 01 or 21 010b Digital Communication Block 02 or 22 011b Digital Communication Block 03 or 23 100b Digital Basic Block 10 101b Digital Basic Block 11 110b Digital Communication Block 12 111b Digital Communication Block 13 **Note** Selection determined by setting of ACLK1R.

13.3.18 ABF_CR0

Analog Output Buffer Control Register 0

Individual Register Names and Addresses:

ABF_CR0: 1,62h

	7	6	5	4	3	2	1	0
Access : POR	RW : 0	RW : 0	RW : 0	RW : 0	RW : 0	RW : 0	RW : 0	RW : 0
Bit Name	ACol1Mux	ACol2Mux	ABUF1EN	ABUF2EN	ABUF0EN	ABUF3EN	Bypass	PWR

This register controls analog input muxes from Port 0.

For additional information, see “Register Definitions” on page 419 in the Analog Input Configuration chapter.

Bits	Name	Description
7	**ACol1Mux**	0 Set column 1 input to column 1 input mux output. (1 Column: selects among P0[6,4,2,0]) 1 Set column 1 input to column 0 input mux output. (1 Column: selects among P0[7,5,3,1])
6	**ACol2Mux**	0 Set column 2 input to column 2 input mux output. (1 Column: selects among P0[7,5,3,1]) 1 Set column 2 input to column 3 input mux output. (1 Column: selects among P0[6,4,2,0])
5	**ABUF1EN**	Enables the analog output buffer for Analog Column 1 (Pin P0[5]). 0 Disable analog output buffer. 1 Enable analog output buffer.
4	**ABUF2EN**	Enables the analog output buffer for Analog Column 2 (Pin P0[4]). 0 Disable analog output buffer. 1 Enable analog output buffer.
3	**ABUF0EN**	Enables the analog output buffer for Analog Column 0 (Pin P0[3]). 0 Disable analog output buffer. 1 Enable analog output buffer.
2	**ABUF3EN**	Enables the analog output buffer for Analog Column 3 (Pin P0[2]). 0 Disable analog output buffer. 1 Enable analog output buffer.
1	**Bypass**	Connects the positive input of the amplifier(s) directly to the output(s). Amplifiers must be disabled when in Bypass mode. 0 Disable 1 Enable
0	**PWR**	Determines power level of all output buffers. 0 Low output power 1 High output power

13.3.19 AMD_CR0

Analog Modulation Control Register 0

Individual Register Names and Addresses:

AMD_CR0: 1,63h

	7	6	5	4	3	2	1	0
Access : POR		RW : 0				RW : 0		
Bit Name		AMOD2[2:0]				AMOD0[2:0]		

This register is used to select the modulator bits used with each column.

In the table, note that reserved bits are grayed table cells and are not described in the bit description section. Reserved bits should always be written with a value of '0'. For additional information, see "Register Definitions" on page 400 in the Analog Interface chapter.

Bits	Name	Description
6:4	**AMOD2[2:0]**	Analog modulation control signal selection for column 2. 000b Zero (off) 001b Global Output Bus, even bus bit 1 (GOE[1]) 010b Global Output Bus, even bus bit 0 (GOE[0]) 011b Row 0 Broadcast Bus 100b Analog Column Comparator 0 101b Analog Column Comparator 1 110b Analog Column Comparator 2 111b Analog Column Comparator 3
2:0	**AMOD0[2:0]**	Analog modulation control signal selection for column 0. 000b Zero (off) 001b Global Output Bus, even bus bit 1 (GOE[1]) 010b Global Output Bus, even bus bit 0 (GOE[0]) 011b Row 0 Broadcast Bus 100b Analog Column Comparator 0 101b Analog Column Comparator 1 110b Analog Column Comparator 2 111b Analog Column Comparator 3

13.3.20 CMP_GO_EN

Comparator Bus to Global Outputs Enable Register

Individual Register Names and Addresses:

CMP_GO_EN: 1,64h

	7	6	5 4	3	2	1 0
Access : POR	RW : 0	RW : 0	RW : 0	RW : 0	RW : 0	RW : 0
Bit Name	GOO5	GOO1	SEL1[1:0]	GOO4	GOO0	SEL0[1:0]

This register controls options for driving the analog comparator bus and column clock to the global bus.

For additional information, see “Register Definitions” on page 400 in the Analog Interface chapter.

Bits	Name	Description
7	**GOO5**	Drives the selected column 1 signal to GOO5. 0 No connection to GOO5 from column 1 1 Column 1 drives GOO5
6	**GOO1**	Drives the selected column 1 signal to GOO1. 0 No connection to GOO1 from column 1 1 Column 1 drives GOO1
5:4	**SEL1[1:0]**	Selects the column 1 signal to output. 00b Comparator bus output 01b PHI1 column clock 10b PHI2 column clock 11b Selected column clock direct (1X)
3	**GOO4**	Drives the selected column 0 signal to GOO4. 0 No connection to GOO4 from column 0 1 Column 0 drives GOO4
2	**GOO0**	Drives the selected column 0 signal to GOO0. 0 No connection to GOO0 from column 0 1 Column 0 drives GOO0
1:0	**SEL0[1:0]**	Selects the column 0 signal to output. 00b Comparator bus output 01b PHI1 column clock 10b PHI2 column clock 11b Selected column clock direct (1X)

13.3.21 CMP_GO_EN1

Comparator Bus to Global Outputs Enable Register 1

Individual Register Names and Addresses:

CMP_GO_EN1: 1,65h

	7	6	5	4	3	2	1	0
Access : POR	RW : 0	RW : 0	RW : 0		RW : 0	RW : 0	RW : 0	
Bit Name	GOO7	GOO3	SEL3[1:0]		GOO6	GOO2	SEL2[1:0]	

This register controls options for driving the analog comparator bus and column clock to the global bus. It is only used by the CY8C28x43, CY8C28x45, and CY8C28x52 PSoC devices.

For additional information, see “Register Definitions” on page 400 in the Analog Interface chapter.

Bits	Name	Description
7	**GOO7**	Drives the selected column 3 signal to GOO7. 0 No connection to GOO7 from column 3 1 Column 3 drives GOO7
6	**GOO3**	Drives the selected column 3 signal to GOO3. 0 No connection to GOO3 from column 3 1 Column 3 drives GOO3
5:4	**SEL3[1:0]**	Selects the column 3 signal to output. 00b Comparator bus output. 01b PHI1 column clock. 10b PHI2 column clock. 11b PHI1 unsynchronized comparator bus.
3	**GOO6**	Drives the selected column 2 signal to GOO6. 0 No connection to GOO6 from column 2 1 Column 2 drives GOO6
2	**GOO2**	Drives the selected column 2 signal to GOO2. 0 No connection to GOO2 from column 2 1 Column 2 drives GOO2
1:0	**SEL2[1:0]**	Selects the column 2 signal to output. 00b Comparator bus output. 01b PHI1 column clock. 10b PHI2 column clock. 11b PHI1 unsynchronized comparator bus.

13.3.22 AMD_CR1

Analog Modulation Control Register 1

Individual Register Names and Addresses:

AMD_CR1: 1,66h

	7	6	5	4	3	2	1	0
Access : POR		RW : 0				RW : 0		
Bit Name		AMOD3[2:0]				AMOD1[2:0]		

This register is used to select the modulator bits used with each column.

In the table, note that reserved bits are grayed table cells and are not described in the bit description section. Reserved bits should always be written with a value of '0'. For additional information, see "Register Definitions" on page 400 in the Analog Interface chapter.

Bits	Name	Description
6:4	**AMOD3[2:0]**	Analog modulation control signal selection for column 3. 000b Zero (off) 001b Global Output Bus, even bus bit 1 (GOE[1]) 010b Global Output Bus, even bus bit 0 (GOE[0]) 011b Row 0 Broadcast Bus 100b Analog Column Comparator 0 101b Analog Column Comparator 1 110b Analog Column Comparator 2 111b Analog Column Comparator 3
2:0	**AMOD1[2:0]**	Analog modulation control signal selection for column 1. 000b Zero (off) 001b Global Output Bus, even bus bit 1 (GOE[1]) 010b Global Output Bus, even bus bit 0 (GOE[0]) 011b Row 0 Broadcast Bus 100b Analog Column Comparator 0 101b Analog Column Comparator 1 110b Analog Column Comparator 2 111b Analog Column Comparator 3

13.3.23 ALT_CR0

Analog LUT Control Register 0

Individual Register Names and Addresses:

ALT_CR0: 1,67h

	7	6	5	4	3	2	1	0
Access : POR	RW : 0				RW : 0			
Bit Name	LUT1[3:0]				LUT0[3:0]			

This register is used to select the logic function. For additional information, see “Register Definitions” on page 400 in the Analog Interface chapter.

Bits	Name	Description
7:4	**LUT1[3:0]**	Select 1 of 16 logic functions for output of comparator bus 1. For a 1 column device, LUT input B = 0. **Function** 0000b FALSE 0001b A AND $\overline{B}$ 0010b A AND $\overline{B}$ 0011b $\overline{A}$ 0100b $\overline{A}$ AND B 0101b B 0110b A XOR B 0111b A OR B 1000b A NOR B 1001b $\overline{A}$ XNOR B 1010b $\overline{B}$ 1011b $\overline{A}$ OR $\overline{B}$ 1100b $\overline{A}$ 1101b $\overline{A}$ OR B 1110b A NAND B 1111b TRUE
3:0	**LUT0[3:0]**	Select 1 of 16 logic functions for output of comparator bus 0. **Function** 0000b FALSE 0001b A AND $\overline{B}$ 0010b A AND $\overline{B}$ 0011b $\overline{A}$ 0100b $\overline{A}$ AND B 0101b B 0110b A XOR B 0111b A OR B 1000b A NOR B 1001b $\overline{A}$ XNOR B 1010b $\overline{B}$ 1011b $\overline{A}$ OR $\overline{B}$ 1100b $\overline{A}$ 1101b $\overline{A}$ OR B 1110b A NAND B 1111b TRUE

13.3.24 ALT_CR1

Analog LUT Control Register 1

Individual Register Names and Addresses:

ALT_CR1: 1,68h

4 COLUMN	7	6	5	4	3	2	1	0
Access : POR	RW : 0				RW : 0			
Bit Name	LUT3[3:0]				LUT2[3:0]			

This register is used to select the logic function performed by the LUT for each analog column.

This register is for 4 column PSoC devices only. For additional information, see “Register Definitions” on page 400 in the Analog Interface chapter.

Bits	Name	Description
7:4	LUT3[3:0]	Select 1 of 16 logic functions for output of comparator bus 3. **Function** 0000b FALSE 0001b A AND $\overline{B}$ 0010b A AND $\overline{B}$ 0011b $\overline{A}$ 0100b $\overline{A}$ AND B 0101b B 0110b A XOR B 0111b A OR B 1000b A NOR B 1001b $\overline{A}$ XNOR B 1010b $\overline{B}$ 1011b $\overline{A}$ OR $\overline{B}$ 1100b $\overline{A}$ 1101b $\overline{A}$ OR B 1110b A NAND B 1111b TRUE
3:0	LUT2[3:0]	Select 1 of 16 logic functions for output of comparator bus 2. **Function** 0000b FALSE 0001b A AND $\overline{B}$ 0010b A AND $\overline{B}$ 0011b $\overline{A}$ 0100b $\overline{A}$ AND B 0101b B 0110b A XOR B 0111b A OR B 1000b A NOR B 1001b $\overline{A}$ XNOR B 1010b $\overline{B}$ 1011b $\overline{A}$ OR $\overline{B}$ 1100b $\overline{A}$ 1101b $\overline{A}$ OR B 1110b A NAND B 1111b TRUE

13.3.25 CLK_CR2

Analog Clock Source Control Register 2

Individual Register Names and Addresses:

CLK_CR2: 1,69h

4 COLUMN	7	6	5	4	3	2	1	0
Access : POR					RW : 0			RW : 0
Bit Name					ACLK1R			ACLK0R

This register, in conjunction with the CLK_CR1 and CLK_CR0 registers, selects a digital block as a source for analog column clocking.

This register is for 4 column PSoC devices only. These bits extend the range of the Digital PSoC blocks that may be selected for the analog clock source in CLK_CR1 from eight to 16. In the table, note that reserved bits are grayed table cells and are not described in the bit description section. Reserved bits should always be written with a value of '0'. For additional information, see "Register Definitions" on page 400 in the Analog Interface chapter.

Bits	Name	Description
3	**ACLK1R**	Analog Clock 1 Selection Range 0 Select Digital PSoC Block, from row 0 and 1 (00-13). 1 Select Digital PSoC Block, from row 2 and 3 (20-33).
0	**ACLK0R**	Analog Clock 0 Selection Range 0 Select Digital PSoC Block, from row 0 and 1 (00-13). 1 Select Digital PSoC Block, from row 2 and 3 (20-33).

13.3.26 AMUX_CFG1

Analog Mux Config Register 1

Individual Register Names and Addresses:

AMUX_CFG1: 1,6Ah

	7	6	5	4	3	2	1	0
Access : POR	RW : 0	RW : 0	RW : 0	RW : 0	RW : 0			RW : 0
Bit Name	ABusMux3	ABusMux2	ACol3Mux	ACol0Mux	MUXCLK1[2:0]			EN1

This register controls the inputs to the analog column muxes.

For additional information, refer to the “Register Definitions” on page 528 in the I/O Analog Multiplexer chapter.

Bits	Name	Description
7	**ABusMux3**	
		0 Select analog column 3 input to analog column 3 Input Select mux output.
		1 Select analog column 3 input to the analog mux bus right.
6	**ABusMux2**	
		0 Select analog column 2 input to analog column 2 Input Select mux output.
		1 Select analog column 2 input to the analog mux bus left.
5	**ACol3Mux**	
		0 Select analog column 3 input to analog column 3 input mux output. (Selects among P0[6,4,2,0].)
		1 Select analog column 3 input to analog column 2 input mux output. (Selects among P0[7,5,3,1].)
4	**ACol0Mux**	
		0 Select analog column 0 input to analog column 0 input mux output. (Selects among P0[7,5,3,1].)
		1 Select analog column 0 input to analog column 1 input mux output. (Selects among P0[6,4,2,0].)
3:1	**MUXCLK1[2:0]**	Selects a precharge clock source for analog mux bus right (AMuxBus1) connections. It can be suppressed by bit 5 in AMUX_CLK register.
		000b Precharge clock is off; no switching.
		001b VC1
		010b VC2
		011b Row1 Broadcast
		100b Analog column 1 clock
		101b Analog column 3 clock
		110b Analog column 5 clock
		111b Reserved
0	**EN1**	0 Disable MUXCLK Right output.
		1 Enable MUXCLK Right output.

13.3.27 SADC_TSCR0

SAR ADC Trigger Source Control Register 0

Individual Register Names and Addresses:

SADC_TSCR0: 1,71h

	7	6	5	4	3	2	1	0
Access : POR	RW : 0000				RW : 0	RW : 0	RW : 0	RW : 0
Bit Name	TS_INCMP_SEL[3:0]				INCMP_INV	INCMP_EN	CMPH_EN	CMPL_EN

This register controls the selection for an external trigger source.

The 10-bit SAR ADC controller only exists in the CY8C28x03, CY8C28x13, CY8C28x33, CY8C28x43, and CY8C28x45 PSoC devices. This register is not used for the CY8C28x23 and CY8C28x52 devices. For additional information, refer to the "Register Definitions" on page 541 in the 10-Bit SAR ADC Controller chapter.

Bit	Name	Description
7:4	**TS_INCMP_SEL**	Indicates the external source (GIE[7:0) or internal source (ACC_ACMP[3:0] or ACE_ACMP[1:0]). 0000b to 0111b Select GIE[0:7]. 1000b to 1011b Select ACC_ACMP[0:3]. 1100b to 1101b Select ACE_ACMP[0:1]. 1110b to 1111b Reserved.
3	**INCMP_INV**	1 Use inverted version of INCMP
2	**INCMP_EN**	1 Enable INCMP trigger source
1	**CMPH_EN**	1 Enable high channel trigger source
0	**CMPL_EN**	1 Enable low channel trigger source **Note** Enable both CMPH_EN and CMPL_EN to use 16-bit trigger source.

13.3.28 SADC_TSCR1

SAR ADC Trigger Source Control Register 1

Individual Register Names and Addresses:

SADC_TSCR1: 1,72h

	7	6	5	4	3	2	1	0
Access : POR		RW : 000				RW : 000		
Bit Name		TS_CMPH_SEL[2:0]				TS_CMPL_SEL[2:0]		

This register controls the selection of digital blocks for high and low channel comparison.

The 10-bit SAR ADC controller only exists in the CY8C28x03, CY8C28x13, CY8C28x33, CY8C28x43, and CY8C28x45 PSoC devices. This register is not used for the CY8C28x23 and CY8C28x52 devices. For additional information, refer to the “Register Definitions” on page 541 in the 10-Bit SAR ADC Controller chapter.

Bit	Name	Description
6:4	**TS_CMPH_SEL[2:0]**	Selects a digital block's DR0 register to compare against SADC_TSCMPH. When the comparison is equal an ADC sample is triggered. 000b DBB00 001b DBB01 010b DCB02 011b DCB03 100b DBB10 101b DBB11 110b DCB12 111b DCB13
2:0	**TS_CMPL_SEL[2:0]**	Selects a digital block's DR0 register to compare against SADC_TSCMPL. When the comparison is equal an ADC sample is triggered. 000b DBB00 001b DBB01 010b DCB02 011b DCB03 100b DBB10 101b DBB11 110b DCB12 111b DCB13

13.3.29 ACE_AMD_CR0

Analog Type-E Modulation Control Register 0

Individual Register Names and Addresses:

ACE_AMD_CR0: 1,73h

2L* Column	7	6	5	4	3	2	1	0
Access : POR					RW : 0			
Bit Name					AMOD4[3:0]			

* This register is only available for CY8C28xxx devices that have E-type analog blocks. This register is reserved for CY8C28x03, CY8C28x23, and CY8C28x43 devices.

This register is used to select the modulator bits used for analog column 4.

In the table, note that reserved bits are grayed table cells and are not described in the bit description section. Reserved bits should always be written with a value of '0'. For additional information, see "Register Definitions" on page 452 in the Two Column Limited Analog System chapter.

Bits	Name	Description
3:0	**AMOD4[3:0]**	Analog modulation control signal selection for column 4. 0000b Zero (off) 0001b Global Output Bus, even bus bit 1 (GOE[1]) 0010b Global Output Bus, even bus bit 0 (GOE[0]) 0011b Row 0 Broadcast Bus 0100b Analog Column Comparator 4 0101b Analog Column Comparator 5 0110b Analog Column Comparator 0 0111b Analog Column Comparator 1 1000b Reserved (Zero) 1001b Row 1 Broadcast Bus 1010b Row 1 Broadcast Bus 1011b Reserved (High) 1100b Analog Column Comparator 4, single synchronized 1101b Analog Column Comparator 5, single synchronized 1110b Analog Column Comparator 2 1111b Analog Column Comparator 3

13.3.30 ACE_AMX_IN

Analog Type-E Input Select Register

Individual Register Names and Addresses:

ACE_AMX_IN: 1,75h

2L* Column	7	6	5	4	3	2	1	0
Access : POR					RW : 0		RW : 0	
Bit Name					ACI5[1:0]		ACI4[1:0]	

* This register is only available for CY8C28xxx devices that have E-type analog blocks. This register is reserved for CY8C28x03, CY8C28x23, and CY8C28x43 devices.

This register controls the analog muxes that feed signals in from port pins into the analog column 5/4.

Note that reserved bits are grayed table cells and are not described in the bit description section. Reserved bits should always be written with a value of '0'. For additional information, see "Register Definitions" on page 452 in the Two Column Limited Analog System chapter.

Bits	Name	Description
3:2	**ACI5[1:0]**	Selects the Analog Column Mux 5. 00b ACM5 P0[0] 01b ACM5 P0[2] 10b ACM5 P0[4] 11b ACM5 P0[6]
1:0	**ACI4[1:0]**	Selects the Analog Column Mux 4. 00b ACM4 P0[1] 01b ACM4 P0[3] 10b ACM4 P0[5] 11b ACM4 P0[7]

13.3.31 ACE_CMP_CR0

Analog Type-E Comparator Bus 0 Register

Individual Register Names and Addresses:

ACE_CMP_CR0: 1,76h

2L* Column	7	6	5	4	3	2	1	0
Access : POR			R : 0				RW : 0	
Bit Name			COMP[5:4]				AINT[5:4]	

* This register is only available for CY8C28xxx devices that have E-type analog blocks. This register is reserved for CY8C28x03, CY8C28x23, and CY8C28x43 devices.

This register is used to poll the analog 5/4 column comparator bits and select column interrupts.

Note that reserved bits are grayed table cells and are not described in the bit description section. Reserved bits should always be written with a value of '0'. For additional information, see "Register Definitions" on page 452 in the Two Column Limited Analog System chapter.

Bits	Name	Description
5	COMP[5]	Comparator bus state for column 5. This bit is updated on the rising edge of PHI2, unless the comparator latch disable bits are set (refer to the CLDISx bits in the ACE_CMP_CR1 register). If the comparator latch disable bits are set, then this bit is transparent to the comparator bus in the analog array.
4	COMP[4]	Comparator bus state for column 4. This bit is updated on the rising edge of PHI2, unless the comparator latch disable bits are set (refer to the CLDISx bits in the ACE_CMP_CR1 register). If the comparator latch disable bits are set, then this bit is transparent to the comparator bus in the analog array.
1	AINT[5]	Controls the selection of the analog comparator interrupt for column 5. 0 The comparator data bit from the column is the input to the interrupt controller. 1 The terminal count for the dedicated incremental PWM is the interrupt source.
0	AINT[4]	Controls the selection of the analog comparator interrupt for column 4. 0 The comparator data bit from the column is the input to the interrupt controller. 1 The terminal count for the dedicated incremental PWM is the interrupt source.

13.3.32 ACE_CMP_CR1

Analog Type-E Comparator Bus 1 Register

Individual Register Names and Addresses:

ACE_CMP_CR1: 1,77h

2L* Column	7	6	5	4	3	2	1	0
Access : POR			RW : 0	RW : 0				
Bit Name			CLDIS[5	CLDIS[4]				

* This register is only available for CY8C28xxx devices that have E-type analog blocks. This register is reserved for CY8C28x03, CY8C28x23, and CY8C28x43 devices.

This register is used to override the analog column comparator synchronization for analog columns 4 and 5.

By default, the analog comparator bus is synchronized by the column clock and driven to the digital comparator bus for use in the digital array and the interrupt controller. The CLDIS bits are used to bypass the synchronization. This bypass mode can be used in power down operation to wake the device out of sleep, as a result of an analog column interrupt.

Note that reserved bits are grayed table cells and are not described in the bit description section. Reserved bits should always be written with a value of ‘0’. For additional information, see “Register Definitions” on page 452 in the Two Column Limited Analog System chapter.

Bits	Name	Description
5	**CLDIS[5]**	Controls the comparator output latch, column 5. 0 Comparator bus synchronization is enabled. 1 Comparator bus synchronization is disabled.
4	**CLDIS[4]**	Controls the comparator output latch, column 4. 0 Comparator bus synchronization is enabled. 1 Comparator bus synchronization is disabled.

13.3.33 ACE_CMP_GI_EN

Analog Type-E Columns Compare Bus to Global Inputs Control Register

Individual Register Names and Addresses:

ACE_CMP_GI_EN : 1,79h

2L* Column	7	6	5	4	3	2	1	0
Access : POR	RW : 0	RW : 0	RW : 0		RW : 0	RW : 0	RW : 0	
Bit Name	GIO5	GIO1	SEL4[1:0]		GIO4	GIO0	SEL5[1:0]	

* This register is only available for CY8C28xxx devices that have E-type analog blocks. This register is reserved for CY8C28x03, CY8C28x23, and CY8C28x43 devices.

This register controls options for driving the analog comparator bus and column clock to the global bus.

For additional information, refer to the "Register Definitions" on page 452 in the Two Column Limited Analog System chapter.

Bits	Name	Description
7	**GIO5**	Drives the selected column 5 signal to GIO5. 0 No connection to GIO5 from column 5 1 Column 5 drives GIO5
6	**GIO1**	Drives the selected column 5 signal to GIO1. 0 No connection to GIO1 from column 5 1 Column 5 drives GIO1
5:4	**SEL5[1:0]**	Selects the column 5 signal to output. 00b Comparator bus output 01b Column clock 10b Comparator output after single sync 11b Column clock gated with the synchronized comparator bus
3	**GIO4**	Drives the selected column 4 signal to GIO4. 0 No connection to GIO4 from column 4 1 Column 4 drives GIO4
2	**GIO0**	Drives the selected column 4 signal to GIO0. 0 No connection to GIO0 from column 4 1 Column 4 drives GIO0
1:0	**SEL4[1:0]**	Selects the column 4 signal to output. 00b Comparator bus output 01b Column clock 10b ADC PWM output 11b Column clock gated with the synchronized comparator bus

13.3.34 ACE_ALT_CR0

Analog Type-E LUT Control Register 0

Individual Register Names and Addresses:

ACE_ALT_CR0: 1,7Ah

2L* Column	7	6	5	4	3	2	1	0
Access : POR	RW : 0				RW : 0			
Bit Name	LUT5[3:0]				LUT4[3:0]			

* This register is only available for CY8C28xxx devices that have E-type analog blocks. This register is reserved for CY8C28x03, CY8C28x23, and CY8C28x43 devices.

This register is used to select the logic function.

For additional information, see “Register Definitions” on page 452 in the Two Column Limited Analog System chapter.

Bits	Name	Description
7:4	**LUT5[3:0]**	Select 1 of 16 logic functions for output of comparator bus 5. LUT input B = 0. **Function** 0000b FALSE 0011b $\overline{A}$ 1100b A 1111b TRUE
3:0	**LUT4[3:0]**	Select 1 of 16 logic functions for output of comparator bus 4. **Function** 0000b FALSE 0001b A AND $\overline{B}$ 0010b $\overline{A}$ AND B 0011b $\overline{A}$ 0100b A AND B 0101b B 0110b A XOR B 0111b A OR B 1000b $\overline{A}$ NOR $\overline{B}$ 1001b A XNOR B 1010b $\overline{B}$ 1011b A OR $\overline{B}$ 1100b $\overline{A}$ 1101b $\overline{A}$ OR B 1110b A NAND B 1111b TRUE

13.3.35 ACE_ABF_CR0

Analog Type-E Output Buffer Control Register 0

Individual Register Names and Addresses:

ACE_ABF_CR0: 1,7Bh

2L* Column	7	6	5	4	3	2	1	0
Access : POR	RW : 0	RW : 0						
Bit Name	ACE1Mux	ACE0Mux						

* This register is only available for CY8C28xxx devices that have E-type analog blocks. This register is reserved for CY8C28x03, CY8C28x23, and CY8C28x43 devices.

This register controls analog input muxes from Port 0.

Reserved bits should always be written with a value of '0'. For additional information, see "Register Definitions" on page 452 in the Two Column Limited Analog System chapter.

Bits	Name	Description	
7	**ACE1Mux**	0	Set analog column 5 input to analog column 5 input mux output. (P0[6,4,2,0])
		1	Set analog column 5 input to analog column 4 input mux output. (P0[7,5,3,1])
6	**ACE0Mux**	0	Set analog column 4 input to analog column 4 input mux output (P0[7,5,3,1]).
		1	Set analog column 4 input to analog column 5 input mux output (P0[6,4,2,0]).

13.3.36 ACExxCR1

Analog Continuous Time Type E Block Control Register 1

Individual Register Names and Addresses:

ACE00CR1 : 1,7Dh ACE01CR1 : 1,8Dh

2L* Column	7	6	5	4	3	2	1	0
Access : POR		RW : 0	RW : 0			RW : 0		
Bit Name		CompBus	NMux[2:0]			PMux[2:0]		

* This register is only available for CY8C28xxx devices that have E-type analog blocks. This register is reserved for CY8C28x03, CY8C28x23, and CY8C28x43 devices.

This register is one of two registers used to configure the type E continuous time PSoC block.

In the table, note that reserved bits are grayed table cells and are not described in the bit description section. Reserved bits should always be written with a value of '0'. For additional information, see "Register Definitions" on page 452 in the Two Column Limited Analog System chapter.

Bits	Name	Description
6	**CompBus**	Enable output to the comparator bus. The comparator bus is always driven from the CT block. 0 Disable output to comparator bus. 1 Enable output to comparator bus.
5:3	**NMux[2:0]**	Encoding for negative input select. Note that available mux inputs vary by individual PSoC block. **ACE00** **ACE01** 000b ACE01 ACE00 001b VBG VBG 010b Reserved Reserved 011b Muxbus0 Muxbus1 Chip-wide analog mux bus. 100b FB# FB# 101b ASE10 ASE11 110b ASE11 ASE10 111b Port Inputs(AC4) Port Inputs (AC5) # Feedback. Gain = 1, configuration only.
2:0	**PMux[2:0]**	Encoding for positive input select. Note that available mux inputs vary by individual PSoC block. **ACE00** **ACE01** 000b Reserved V_{TEMP} 001b Port Inputs (AC4 Port Inputs (AC5) 010b ACE01 ACE00 011b VBG VBG 100b ASE10 ASE11 101b ASE11 ASE10 110b Reserved Reserved 111b Muxbus0 Muxbus1 Chip-wide analog mux bus.

13.3.37 ACExxCR2

Analog Continuous Time Type E Block Control Register 2

Individual Register Names and Addresses:

ACE00CR2 : 1,7Eh ACE01CR2 : 1,8Eh

2L* Column	7	6	5	4	3	2	1	0
Access : POR							RW : 0	RW : 0
Bit Name							FullRange	PWR

* This register is only available for CY8C28xxx devices that have E-type analog blocks. This register is reserved for CY8C28x03, CY8C28x23, and CY8C28x43 devices.

This register is one of two registers used to configure the type E continuous time PSoC block.

In the table, note that reserved bits are grayed table cells and are not described in the bit description section. Reserved bits should always be written with a value of ‘0’. For additional information, see “Register Definitions” on page 452 in the Two Column Limited Analog System chapter.

Bits	Name	Description	
1	**FullRange**	0	Input range includes Vss but not Vdd.
		1	Rail-to-rail input range, with approximately 10 µA additional cell current.
0	**PWR**	0	Powers off both the CT and SC blocks in the column.
		1	Enables the column’s analog blocks.

13.3.38 ASExxCR0

Analog Switch Cap Type E Block Control Register 0

Individual Register Names and Addresses:

ASE10CR0 : 1,7Fh ASE11CR0 : 1,8Fh

2L* Column	7	6	5	4	3	2	1	0
Access : POR	RW : 0							
Bit Name	FVal							

* This register is only available for CY8C28xxx devices that have E-type analog blocks. This register is reserved for CY8C28x03, CY8C28x23, and CY8C28x43 devices.

This register is used to configure a type E switched capacitor PSoC block.

In the table, note that reserved bits are grayed table cells and are not described in the bit description section. Reserved bits should always be written with a value of '0'. For additional information, see "Register Definitions" on page 452 in the Two Column Limited Analog System chapter.

Bits	Name	Description
7	**FVal**	F Capacitor value selection bit. 0 Slower integration in the SC block (higher accuracy) 1 Faster integration (lower accuracy)

13.3.39 SADC_TSCMPL

SAR ADC Trigger Source Compare Low Register

Individual Register Names and Addresses:

SADC_TSCMPL: 1,81h

	7	6	5	4	3	2	1	0
Access : POR	RW : 00							
Bit Name	TS_CMPL[7:0]							

This byte contains the low channel comparison value. This value is compared against the DR0 register of the digital block chosen in TS_CMPL_SEL. When the comparison is true, an ADC conversion is triggered. **Note** SADC_TSCMPL and SADC_TSCMPH can be combined to form a 16-bit comparison.

The 10-bit SAR ADC controller only exists in the CY8C28x03, CY8C28x13, CY8C28x33, CY8C28x43, and CY8C28x45 PSoC devices. This register is not used for the CY8C28x23 and CY8C28x52 devices. For additional information, refer to the “Register Definitions” on page 541 in the 10-Bit SAR ADC Controller chapter.

Bit	Name	Description
7:0	**TS_CMPL**	The compare value of low channel.

13.3.40 SADC_TSCMPH

SAR ADC Trigger Source Compare High Register

Individual Register Names and Addresses:

SADC_TSCMPH: 1,82h

	7	6	5	4	3	2	1	0
Access : POR	RW : 00							
Bit Name	TS_CMPH[7:0]							

This byte contains the high channel comparison value. This value is compared against the DR0 register of the digital block chosen in TS_CMPH_SEL. When the comparison is true, an ADC conversion is triggered. **Note** SADC_TSCMPL and SADC_TSCMPH can be combined to form a 16-bit comparison.

The 10-bit SAR ADC controller only exists in the CY8C28x03, CY8C28x13, CY8C28x33, CY8C28x43, and CY8C28x45 PSoC devices. This register is not used for the CY8C28x23 and CY8C28x52 devices. For additional information, refer to the “Register Definitions” on page 541 in the 10-Bit SAR ADC Controller chapter.

Bit	Name	Description
7:0	**TS_CMPH**	The compare value of high channel.

13.3.41 ACE_AMD_CR1

Analog Type-E Modulation Control Register 1

Individual Register Names and Addresses:

ACE_AMD_CR1: 1,83h

2L* Column	7	6	5	4	3	2	1	0
Access : POR					RW : 0			
Bit Name					AMOD5[3:0]			

* This register is only available for CY8C28xxx devices that have E-type analog blocks. This register is reserved for CY8C28x03, CY8C28x23, and CY8C28x43 devices.

This register is used to select the modulator bits used with analog column 5.

Note that reserved bits are grayed table cells and are not described in the bit description section. Reserved bits should always be written with a value of '0'. For additional information, see "Register Definitions" on page 452 in the Two Column Limited Analog System chapter.

Bits	Name	Description
3:0	AMOD5[3:0]	Analog modulation control signal selection for column 5. 0000b Zero (off) 0001b Global Output Bus, even bus bit 1 (GOE[1]) 0010b Global Output Bus, even bus bit 0 (GOE[0]) 0011b Row 0 Broadcast Bus 0100b Analog Column Comparator 4 0101b Analog Column Comparator 5 0110b Analog Column Comparator 0 0111b Analog Column Comparator 1 1000b Reserved (Zero) 1001b Row 1 Broadcast Bus 1010b Row 2 Broadcast Bus 1011b Reserved (High) 1100b Analog Column Comparator 4, single synchronized 1101b Analog Column Comparator 5, single synchronized 1110b Analog Column Comparator 2 1111b Analog Column Comparator 3

13.3.42 ACE_PWM_CR

ADC PWM Control Register

Individual Register Names and Addresses:

ACE_PWM_CR: 1,85h

2L* Column	7	6	5	4	3	2	1	0
Access : POR			RW : 0			RW : 0		RW : 0
Bit Name			HIGH[2:0]			LOW[1:0]		PWMEN

* This register is only available for CY8C28xxx devices that have E-type analog blocks. This register is reserved for CY8C28x03, CY8C28x23, and CY8C28x43 devices.

This register controls the parameters for the dedicated ADC PWM. This PWM signal can be selected to gate one or more comparator bus signals (as enabled by bits 7:4 of the DEL_CR0 register).

In the table, note that reserved bits are grayed table cells and are not described in the bit description section. Reserved bits should always be written with a value of '0'. For additional information, refer to the "Register Definitions" on page 452 in the Two Column Limited Analog System chapter.

When the HIGH[2:0] bits are configured with a value other than zero, this PWM source overrides the digital block sources for gating as defined by ICLKS3, ICLKS2, ICLKS1, and ICLKS0 in the DEC_CR0 and DEC_CR1 registers.

Bits	Name		Description
5:3	**HIGH[2:0]**	000b	The dedicated PWM is not in use. The gating signal reverts to a digital block output as selected by the ICLKS bits in the DEC_CR0 and DEC_CR1 registers.
		001b	High time is 1 VC3 period.
		010b	High time is 2 VC3 periods.
		011b	High time is 4 VC3 periods.
		100b	High time is 8 VC3 periods.
		101b	High time is 16 VC3 periods.
		110b	Reserved
		111b	Reserved
2:1	**LOW[1:0]**	00b	No PWM low time, only the terminal count is generated.
		01b	Low time is 1 VC3 period.
		10b	Low time is 2 VC3 periods.
		11b	Low time is 3 VC3 periods.
0	**PWMEN**	0	Disable the dedicated PWM.
		1	Enable the dedicated PWM.

13.3.43 ACE_ADCx_CR

ADC Column 0 and Column 1 Configuration Register

Individual Register Names and Addresses:

ACE_ADC0_CR : 1,86h ACE_ADC1_CR : 1,87h

2L* Column	7	6	5	4	3	2	1	0
Access : POR	R : 0	RW : 0	RW : 0		RW : 0	RW : 0		RW : 0
Bit Name	CMPST	LOREN	SHEN		CBSRC	AUTO		ADCEN

* This register is only available for CY8C28xxx devices that have E-type analog blocks. This register is reserved for CY8C28x03, CY8C28x23, and CY8C28x43 devices.

This register controls the single slope ADC in each column.

ACE_ADC0_CR is the ADC column 0 configuration register and ACE_ADC1_CR is the ADC column 1 configuration register. Reserved bits are grayed table cells and are not described in the bit description section. Reserved bits should always be written with a value of '0'. For additional information, refer to the "Register Definitions" on page 452 in the Two Column Limited Analog System chapter.

Bit	Name	Description
7	**CMPST**	This bit is the state of the comparator at the end of an ADC conversion period (as defined by the falling edge of the gating PWM). It is read only. 0 The comparator tripped during the previous conversion ramp. 1 The comparator did not trip during the previous conversion ramp.
6	**LOREN**	This bit controls an approximate 4-to-1 range on the ADC current source. 0 Normal current range 1 Low current range
5	**SHEN**	Sample and Hold Enable. The sample and hold function is only applicable to the PMUX (positive) comparator input. 0 Disabled 1 Enabled
3	**CBSRC**	Digital Comparator Bus Source. There are two possible sources for the digital comparator bus in conjunction with ADC operation. 0 Digital comparator bus is driven with synchronized and gated analog comparator output. Implements a Counter Enable interface. 1 Digital comparator bus is driven with the selected PWM terminal count. Implements a Timer Capture interface.
2	**AUTO**	Auto ADC Mode. The bit allows for a periodic signal to control ADC sequencing. 0 Auto mode off. 1 Auto mode on. Set this bit for ADC operation. The voltage ramp generator and sample and hold circuitry are controlled by the selected PWM signal (digital block or dedicated PWM).
0	**ADCEN**	Enable. Configures the ADC for operation, power up. 0 Disabled, Powered Down. 1 Enabled

13.3.44 ACE_CLK_CR0

Analog Type-E Column Clock Control Register 0

Individual Register Names and Addresses:

ACE_CLK_CR0: 1,89h

2L* Column	7	6	5	4	3	2	1	0
Access : POR					RW : 0		RW : 0	
Bit Name					AColumn5[1:0]		AColumn4[1:0]	

* This register is only available for CY8C28xxx devices that have E-type analog blocks. This register is reserved for CY8C28x03, CY8C28x23, and CY8C28x43 devices.

This register is used to select the clock source for an individual analog column.

Each column has two bits that select the column clock input source. The resulting column clock frequency is the selected input clock frequency divided by the ACE_CLK_CR3 register. Note that reserved bits are grayed table cells and are not described in the bit description section. Reserved bits should always be written with a value of '0'. For additional information, see "Register Definitions" on page 452 in the Two Column Limited Analog System chapter.

Bits	Name	Description
3:2	**AColumn5[1:0]**	Clock selection for column 5. 00b Variable Clock 1 (VC1) 01b Variable Clock 2 (VC2) 10b Analog Clock 4 (ACLK4) 11b Analog Clock 5 (ACLK5)
1:0	**AColumn4[1:0]**	Clock selection for column 4. 00b Variable Clock 1 (VC1) 01b Variable Clock 2 (VC2) 10b Analog Clock 4 (ACLK4) 11b Analog Clock 5 (ACLK4)

13.3.45 ACE_CLK_CR1

Analog Type E Columns Clock Control Register 1

Individual Register Names and Addresses:

ACE_CLK_CR1 : 1,8Ah

2L* Column	7	6	5	4	3	2	1	0
Access : POR	RW : 0				RW : 0			
Bit Name	ACLK5[3:0]				ACLK4[3:0]			

* This register is only available for CY8C28xxx devices that have E-type analog blocks. This register is reserved for CY8C28x03, CY8C28x23, and CY8C28x43 devices.

This register is used to select the clock source for an individual analog column.

Each nibble is used to form 16:1 MUX to select 1 out of 16 dig row output for Type-E column clocks. For additional information, see “Register Definitions” on page 452 in the Two Column Limited Analog System chapter.

Bits	Name	Description
7:4	ACLK5[3:0]	Select the clocking source for Analog Clock 5 0000b Digital Basic Block 00 0001b Digital Basic Block 01 0010b Digital Communication Block 02 0011b Digital Communication Block 03 0100b Digital Basic Block 10 0101b Digital Basic Block 11 0110b Digital Communication Block 12 0111b Digital Communication Block 13 1000b Digital Basic Block 20 1001b Digital Basic Block 21 1010b Digital Communication Block 22 1011b Digital Communication Block 23 1100b Reserved 1101b Reserved 1110b Reserved 1111b Reserved
3:0	ACLK4[3:0]	Select the clocking source for Analog Clock 4 0000b Digital Basic Block 00 0001b Digital Basic Block 01 0010b Digital Communication Block 02 0011b Digital Communication Block 03 0100b Digital Basic Block 10 0101b Digital Basic Block 11 0110b Digital Communication Block 12 0111b Digital Communication Block 13 1000b Digital Basic Block 20 1001b Digital Basic Block 21 1010b Digital Communication Block 22 1011b Digital Communication Block 23 1100b Reserved 1101b Reserved 1110b Reserved 1111b Reserved

13.3.46 ACE_CLK_CR3

Analog Clock Source Control Register 3

Individual Register Names and Addresses:

ACE_CLK_CR3: 1,8Bh

2L* Column	7	6	5	4	3	2	1	0
Access : POR		RW : 0	RW : 0			RW : 0	RW : 0	
Bit Name		SYS5	DIVCLK5[1:0]			SYS4	DIVCLK4[1:0]	

* This register is only available for CY8C28xxx devices that have E-type analog blocks. This register is reserved for CY8C28x03, CY8C28x23, and CY8C28x43 devices.

This register controls additional options for analog column clock generation.

In the table, note that reserved bits are grayed table cells and are not described in the bit description section. Reserved bits should always be written with a value of '0'. For additional information, see "Register Definitions" on page 452 in the Two Column Limited Analog System chapter.

Bits	Name	Description	
6	**SYS5**	0	Column 5 clock selection is controlled by ACE_CLK_CR0.
		1	Column 5 clock selection is SYSCLK direct.
5:4	**DIVCLK5[1:0]**	00b	No divide on selected column 5 clock.
		01b	Divide by 2 on selected column 5 clock.
		10b	Divide by 4 on selected column 5 clock.
		11b	Divide by 8 on selected column 5 clock.
2	**SYS4**	0	Column 4 clock selection is controlled by ACE_CLK_CR0.
		1	Column 4 clock selection is SYSCLK direct.
1:0	**DIVCLK4[1:0]**	00b	No divide on selected column 4 clock.
		01b	Divide by 2 on selected column 4 clock.
		10b	Divide by 4 on selected column 4 clock.
		11b	Divide by 8 on selected column 4 clock.

13.3.47 DECx_CR0

Decimator Control Register 0

Individual Register Names and Addresses:

DEC0_CR0 : 1,91h DEC1_CR0 : 1,95h DEC2_CR0 : 1,99h DEC3_CR0 : 1,9Dh

	7	6	5	4	3	2	1	0
Access : POR	RW : 00							
Bit Name	POL	GOOO	GOOE			DATA_IN[2:0]		

This register controls the data inputs for the decimator.

In the table, note that reserved bits are grayed table cells and are not described in the bit description section. Reserved bits should always be written with a value of '0'. For additional information, refer to the "Register Definitions" on page 488 in the Decimator chapter.

Bits	Name	Description
7	**POL**	0 Do not invert the decimator data input. 1 Invert the decimator data input.
6	**GOOO**	1 Enables the related decimator data input to be output to Global Digital Output Odd Bus. **Decimator # — GOO Bus Bit** 0 — Output to GOO[1] 1 — Output to GOO[3] 2 — Output to GOO[5] 3 — Output to GOO[7]
5	**GOOE**	1 Enables the related decimator data input to be output to Global Digital Output Even Bus. **Decimator # — GOO Bus Bit** 0 — output to GOO[0] 1 — output to GOO[2] 2 — output to GOO[4] 3 — output to GOO[6]
2:0	**DATA_IN[2:0]**	Used to select one decimator data input from among the following sources. The 'x' in the following entries is the corresponding decimator number. 000b ACCx_CMPO, the corresponding analog column compare bus output. 001b BCROWx, the corresponding Broadcast net from digital blocks. Note that it is fixed 'HIGH' for decimator 3. 010b The compare bus output of analog column 4 (Type-E column). 011b The compare bus output of analog column 5 (Type-E column). 100b ROW0LUTx, the corresponding LUT output from digital row 0. 101b ROW1LUTx, the corresponding LUT output from digital row 1. 110b ROW2LUTx, the corresponding LUT output from digital row 2. 111b LOW (reserved)

13.3.48 DEC_CR3

Decimator Global Control Register 3

Individual Register Names and Addresses:

DEC_CR3: 1,92h

	7	6	5	4	3	2	1	0
Access : POR	RW : 00							
Bit Name	DEC1_EN	CLK_IN1[2:0]			DEC0_EN	CLK_IN0[2:0]		

This register controls decimator enabling and clock selection.

For additional information, refer to the “Register Definitions” on page 488 in the Decimator chapter.

Bits	Name	Description
7	**DEC1_EN**	1 Enables decimator 1
6:4	**CLK_IN1[2:0]**	Select one of the following sources as decimator 1 clock 000b VC1 001b VC2 010b CLKA4 (from analog column 4) 011b CLKA5 (from analog column 5) 100b VC3 101b Preselected clock source (from digital block primary outputs). See DEC_CR5. 110b Reserved 111b LOW (Reserved)
3	**DEC0_EN**	1 Enables decimator 0
2:0	**CLK_IN0[2:0]**	Selects one of the following sources as decimator 0 clock 000b VC1 001b VC2 010b CLKA4 (from analog column 4) 011b CLKA5 (from analog column 5) 100b VC3 101b Preselected clock source (from digital block primary outputs). See DEC_CR5. 110b Reserved 111b LOW (Reserved)

Note The input clock frequency must be less than 24 MHz.

13.3.49 DEC_CR4

Decimator Global Control Register 4

Individual Register Names and Addresses:

DEC_CR4: 1,96h

	7	6	5	4	3	2	1	0
Access : POR	RW : 00							
Bit Name	DEC3_EN	CLK_IN3[2:0]			DEC2_EN	CLK_IN2[2:0]		

This register controls decimator enabling and clock selection.

For additional information, refer to the “Register Definitions” on page 488 in the Decimator chapter.

Bits	Name	Description
7	**DEC3_EN**	1 Enable decimator 3
6:4	**CLK_IN3[2:0]**	Selects one as decimator 3 clock from among the following sources 000b VC1 001b VC2 010b CLKA4 (from analog column 4) 011b CLKA5 (from analog column 5) 100b VC3 101b Preselected clock source (from digital block primary outputs). See DEC_CR5. 110b Reserved 111b LOW (Reserved)
3	**DEC2_EN**	1 Enable decimator 2
2:0	**CLK_IN2[2:0]**	Selects one as decimator 2 clock from among the following sources 000b VC1 001b VC2 010b CLKA4 (from analog column 4) 011b CLKA5 (from analog column 5) 100b VC3 101b Preselected clock source (from digital block primary outputs). See DEC_CR5. 110b Reserved 111b LOW (Reserved)

Note The input clock frequency must be less than 24 MHz.

13.3.50 DEC_CR5

Decimator Global Control Register 5

Individual Register Names and Addresses:

DEC_CR5: 1,9Ah

	7	6	5	4	3	2	1	0
Access : POR	RW : 00							
Bit Name					DSCLK[3:0]			

In the table, note that reserved bits are grayed table cells and are not described in the bit description section. Reserved bits should always be written with a value of ‘0’. For additional information, refer to the “Register Definitions” on page 488 in the Decimator chapter.

Bits	Name	Description
3:0	DSCLK[3:0]	Indicate which digital block's primary output is selected as a decimator clock source. **Note** LOW is selected when DSCLK is greater than 1011b. 0000b DBC00 0001b DBC01 0010b DCC02 0011b DCC03 0100b DCB10 0101b DCB11 0110b DCC12 0111b DCC13 1000b DCC20 1001b DCC21 1010b DCC22 1011b DCC23 1100b Reserved 1101b Reserved 1110b Reserved 1111b Reserved

13.3.51 GDI_O_IN_CR

Global Digital Interconnect Odd Inputs Control Register

Individual Register Names and Addresses:

GDI_O_IN_CR: 1,A0h

	7	6	5	4	3	2	1	0
Access : POR	RW : 00							
Bit Name	GDIOICR[7]	GDIOICR[6]	GDIOICR[5]	GDIOICR[4]	GDIOICR[3]	GDIOICR[2]	GDIOICR[1]	GDIOICR[0]

This register allows a global input net to drive its corresponding next global output net. Note that the corresponding bit in GDI_O_IN must be set.

For additional information, refer to the “Register Definitions” on page 322 in the Global Digital Interconnect chapter.

Bit	Name	Description
7	**GDIOICR[7]**	0 GIO[7] drives GOO[7] 1 GIO[6] drives GOO[7] **Note** These selections are only valid if bit 7 is set to ‘1’ in the GDI_O_IN register.
6	**GDIOICR[6]**	0 GIO[6] drives GOO[6] 1 GIO[5] drives GOO[6] **Note** These selections are only valid if bit 6 is set to ‘1’ in the GDI_O_IN register.
5	**GDIOICR[5]**	0 GIO[5] drives GOO[5] 1 GIO[4] drives GOO[5] **Note** These selections are only valid if bit 5 is set to ‘1’ in the GDI_O_IN register.
4	**GDIOICR[4]**	0 GIO[4] drives GOO[4] 1 GIO[3] drives GOO[4] **Note** These selections are only valid if bit 4 is set to ‘1’ in the GDI_O_IN register.
3	**GDIOICR[3]**	0 GIO[3] drives GOO[3] 1 GIO[2] drives GOO[3] when bit 3 is 1 in GDI_O_IN register. **Note** These selections are only valid if bit 3 is set to ‘1’ in the GDI_O_IN register.
2	**GDIOICR[2]**	0 GIO[2] drives GOO[2] 1 GIO[1] drives GOO[2] **Note** These selections are only valid if bit 2 is set to ‘1’ in the GDI_O_IN register.
1	**GDIOICR[1]**	0 GIO[1] drives GOO[1] 1 GIO[0] drives GOO[1] **Note** These selections are only valid if bit 1 is set to ‘1’ in the GDI_O_IN register.
0	**GDIOICR[0]**	0 GIO[0] drives GOO[0] 1 GIO[7] drives GOO[0] **Note** These selections are only valid if bit 0 is set to ‘1’ in the GDI_O_IN register.

13.3.52 GDI_E_IN_CR

Global Digital Interconnect Even Inputs Control Register

Individual Register Names and Addresses:

GDI_E_IN_CR: 1,A1h

	7	6	5	4	3	2	1	0
Access : POR	RW : 00							
Bit Name	GDIEICR[7]	GDIEICR[6]	GDIEICR[5]	GDIEICR[4]	GDIEICR[3]	GDIEICR[2]	GDIEICR[1]	GDIEICR[0]

This register allows a global input net to drive its corresponding next global output net. Note that the corresponding bit in GDI_E_IN must be set.

For additional information, refer to the “Register Definitions” on page 322 in the Global Digital Interconnect chapter.

Bit	Name	Description
7	**GDIEICR[7]**	0 GIE[7] drives GOE[7] 1 GIE[6] drives GOE[7] **Note** These selections are only valid if bit 7 is set to ‘1’ in the GDI_E_IN register.
6	**GDIEICR[6]**	0 GIE[6] drives GOE[6] 1 GIE[5] drives GOE[6] **Note** These selections are only valid if bit 6 is set to ‘1’ in the GDI_E_IN register.
5	**GDIEICR[5]**	0 GIE[5] drives GOE[5] 1 GIE[4] drives GOE[5] **Note** These selections are only valid if bit 5 is set to ‘1’ in the GDI_E_IN register.
4	**GDIEICR[4]**	0 GIE[4] drives GOE[4] 1 GIE[3] drives GOE[4] **Note** These selections are only valid if bit 4 is set to ‘1’ in the GDI_E_IN register.
3	**GDIEICR[3]**	0 GIE[3] drives GOE[3] 1 GIE[2] drives GOE[3] **Note** These selections are only valid if bit 3 is set to ‘1’ in the GDI_E_IN register.
2	**GDIEICR[2]**	0 GIE[2] drives GOE[2] 1 GIE[1] drives GOE[2] **Note** These selections are only valid if bit 2 is set to ‘1’ in the GDI_E_IN register.
1	**GDIEICR[1]**	0 GIE[1] drives GOE[1] 1 GIE[0] drives GOE[1] **Note** These selections are only valid if bit 1 is set to ‘1’ in the GDI_E_IN register.
0	**GDIEICR[0]**	0 GIE[0] drives GOE[0] 1 GIE[7] drives GOE[0] **Note** These selections are only valid if bit 0 is set to ‘1’ in the GDI_E_IN register.

13.3.53 GDI_O_OU_CR

Global Digital Interconnect Odd Outputs Control Register

Individual Register Names and Addresses:

GDI_O_OU_CR: 1,A2h

	7	6	5	4	3	2	1	0
Access : POR	RW : 00							
Bit Name	GDIOOCR[7]	GDIOOCR[6]	GDIOOCR[5]	GDIOOCR[4]	GDIOOCR[3]	GDIOOCR[2]	GDIOOCR[1]	GDIOOCR[0]

This register allows a global output net to drive its corresponding next global input net. Note that corresponding bit in GDI_O_OU must be set.

For additional information, refer to the “Register Definitions” on page 322 in the Global Digital Interconnect chapter.

Bit	Name	Description
7	**GDIOOCR[7]**	0 GOO[7] drives GIO[7] 1 GOO[6] drives GIO[7] **Note** These selections are only valid if bit 7 is set to ‘1’ in the GDI_O_OU register.
6	**GDIOOCR[6]**	0 GOO[6] drives GIO[6] 1 GOO[5] drives GIO[6] **Note** These selections are only valid if bit 6 is set to ‘1’ in the GDI_O_OU register.
5	**GDIOOCR[5]**	0 GOO[5] drives GIO[5] 1 GOO[4] drives GIO[5] **Note** These selections are only valid if bit 5 is set to ‘1’ in the GDI_O_OU register.
4	**GDIOOCR[4]**	0 GOO[4] drives GIO[4] 1 GOO[3] drives GIO[4] **Note** These selections are only valid if bit 4 is set to ‘1’ in the GDI_O_OU register.
3	**GDIOOCR[3]**	0 GOO[3] drives GIO[3] 1 GOO[2] drives GIO[3] **Note** These selections are only valid if bit 3 is set to ‘1’ in the GDI_O_OU register.
2	**GDIOOCR[2]**	0 GOO[2] drives GIO[2] 1 GOO[1] drives GIO[2] **Note** These selections are only valid if bit 2 is set to ‘1’ in the GDI_O_OU register.
1	**GDIOOCR[1]**	0 GOO[1] drives GIO[1] 1 GOO[0] drives GIO[1] **Note** These selections are only valid if bit 1 is set to ‘1’ in the GDI_O_OU register.
0	**GDIOOCR[0]**	0 GOO[0] drives GIO[0] 1 GOO[7] drives GIO[0] **Note** These selections are only valid if bit 0 is set to ‘1’ in the GDI_O_OU register.

13.3.54 GDI_E_OU_CR

Global Digital Interconnect Even Outputs Control Register

Individual Register Names and Addresses:

GDI_E_OU_CR: 1,A3h

	7	6	5	4	3	2	1	0
Access : POR	RW : 00							
Bit Name	GDIEOCR[7]	GDIEOCR[6]	GDIEOCR[5]	GDIEOCR[4]	GDIEOCR[3]	GDIEOCR[2]	GDIEOCR[1]	GDIEOCR[0]

This register allows a global output net to drive its corresponding next global input net. Note that corresponding bit in GDI_E_OU must be set.

For additional information, refer to the “Register Definitions” on page 322 in the Global Digital Interconnect chapter.

Bit	Name	Description
7	**GDEOICR[7]**	0 GOE[7] drives GIE[7] 1 GOE[6] drives GIE[7] **Note** These selections are only valid if bit 7 is set to ‘1’ in the GDI_E_OU register.
6	**GDEOICR[6]**	0 GOE[6] drives GIE[6] 1 GOE[5] drives GIE[6] **Note** These selections are only valid if bit 6 is set to ‘1’ in the GDI_E_OU register.
5	**GDEOICR[5]**	0 GOE[5] drives GIE[5] 1 GOE[4] drives GIE[5] **Note** These selections are only valid if bit 5 is set to ‘1’ in the GDI_E_OU register.
4	**GDEOICR[4]**	0 GOE[4] drives GIE[4] 1 GOE[3] drives GIE[4] **Note** These selections are only valid if bit 4 is set to ‘1’ in the GDI_E_OU register.
3	**GDEOICR[3]**	0 GOE[3] drives GIE[3] 1 GOE[2] drives GIE[3] **Note** These selections are only valid if bit 3 is set to ‘1’ in the GDI_E_OU register.
2	**GDEOICR[2]**	0 GOE[2] drives GIE[2] 1 GOE[1] drives GIE[2] **Note** These selections are only valid if bit 2 is set to ‘1’ in the GDI_E_OU register.
1	**GDEOICR[1]**	0 GOE[1] drives GIE[1] 1 GOE[0] drives GIE[1] **Note** These selections are only valid if bit 1 is set to ‘1’ in the GDI_E_OU register.
0	**GDEOICR[0]**	0 GOE[0] drives GIE[0] 1 GOE[7] drives GIE[0] **Note** These selections are only valid if bit 0 is set to ‘1’ in the GDI_E_OU register.

13.3.55 RTC_H

Real Time Clock Hours Register

Individual Register Names and Addresses:

RTC_H: 1,A4h

	7	6	5	4	3	2	1	0
Access : POR			RW : 00		RW : 0000			
Bit Name			HR1[1:0]		HR0[3:0]			

This register is used to read and write the current hour value in BCD format. Writing to this register will reset count 65536 to all zeros. (Will be displayed as “XY”; the legal range is from 00 to 23.)

In the table, note that reserved bits are grayed table cells and are not described in the bit description section. Reserved bits should always be written with a value of ‘0’. For additional information, see “Register Definitions” on page 534 in the Real Time Clock chapter.

Bit	Name	Description
5:4	**HR1[1:0]**	Hour time decal number; BCD code.
3:0	**HR0[3:0]**	Hour time units number; BCD code.

13.3.56 RTC_M

Real Time Clock Minutes Register

Individual Register Names and Addresses:

RTC_M: 1,A5h

	7	6	5	4	3	2	1	0
Access : POR		RW : 00			RW : 0000			
Bit Name		MIN1[2:0]			MIN0[3:0]			

This register is used to read and write the current minute value in BCD format. Writing to this register will reset count 65536 to all zeros. (Will be displayed as “XY”; the legal range is from 00 to 59.)

In the table, note that reserved bits are grayed table cells and are not described in the bit description section. Reserved bits should always be written with a value of ‘0’. For additional information, see “Register Definitions” on page 534 in the Real Time Clock chapter.

Bit	Name	Description
6:4	**MIN1[2:0]**	Minute time decal number; BCD code.
3:0	**MIN0[3:0]**	Minute time units number; BCD code.

13.3.57 RTC_S

Real Time Clock Seconds Register

Individual Register Names and Addresses:

RTC_S: 1,A6h

	7	6	5	4	3	2	1	0
Access : POR		RW : 00			RW : 0000			
Bit Name		SEC1[2:0]			SEC0[3:0]			

This register is used to read and write the current second value in BCD format. Writing to this register will reset count 65536 to all zeros. (Will be displayed as “XY”; the legal range is from 00 to 59.)

In the table, note that reserved bits are grayed table cells and are not described in the bit description section. Reserved bits should always be written with a value of ‘0’. For additional information, see “Register Definitions” on page 534 in the Real Time Clock chapter.

Bit	Name	Description
6:4	**SEC1[2:0]**	Second time decal number; BCD code.
3:0	**SEC0[3:0]**	Second time units number; BCD code.

13.3.58 RTC_CR

Real Time Clock Control Register

Individual Register Names and Addresses:

RTC_CR: 1,A7h

	7	6	5	4	3	2	1	0
Access : POR			RW : 0	RW : 0	RW : 00		RW : 0	RW : 0
Bit Name			INT_EN	CLKSE	INT_SEL[1:0]		SYNCRD_EN	RTC_EN

This register controls the RTC.

For additional information, see “Register Definitions” on page 534 in the Real Time Clock chapter.

Bit	Name	Description
5	**INT_EN**	0 Disable interrupt 1 Enable interrupt
4	**CLKSE**	0 CLK32S 1 VC1 If VC1 is selected, the RTC module acts as a fixed period interrupt source.
3:2	**INT_SEL[1:0]**	Interrupt Select 00b Interrupt per second 01b Interrupt per minute 10b Interrupt per hour 11b Interrupt per day
1	**SYNCRD_EN**	0 RTC_M/RTC_S are read directly from their registers without buffering. 1 RTC_M/RTC_S reads data from its data buffer. The data is latched from the real register when RTC_H is read.
0	**RTC_EN**	0 Disable RTC function 1 Enable RTC function

13.3.59 SADC_CR0

SAR ADC Control Register 0

Individual Register Names and Addresses:

SADC_CR0: 1,A8h

	7	6	5	4	3	2	1	0
Access : POR		RW : 0000				RW : 0	RW : 0	RW : 0
Bit Name		ADC_CHS[3:0]				READY	Start/ONGOING	ADCEN

This register controls the input selection for the SAR ADC, and contains status and enable bits. The 10-bit SAR ADC controller only exists in the CY8C28x03, CY8C28x13, CY8C28x33, CY8C28x43, and CY8C28x45 PSoC devices. This register is not used for the CY8C28x23 and CY8C28x52 devices.

In the table, note that reserved bits are grayed table cells and are not described in the bit description section. Reserved bits should always be written with a value of ‘0’. For additional information, see “Register Definitions” on page 541 in the 10-Bit SAR ADC Controller chapter.

Bit	Name	Description
6:3	**ADC_CHS[3:0]**	Channel selection 0000b P0.0 0001b P0.1 0010b P0.2 0011b P0.3 0100b P0.4 0101b P0.5 0110b P0.6 0001b P0.7 1000b ACC00 1001b ACC01 1010b ACC02 1011b ACC03 1100b Muxbus0 1101b Muxbus1 1110b Vbg 1111b Reserved
2	**READY**	1 There is new data that has never been read.
1	**Start/ONGOING**	Reading a ‘1’ means the A-D conversion started, and is not finished yet. Writing ‘1’ to it in SW trigger mode triggers a new conversion.
0	**ADC_EN**	Enable ADC function.

13.3.60 SADC_CR1

SAR ADC Control Register 1

Individual Register Names and Addresses:

SADC_CR1: 1,A9h

	7	6	5	4	3	2	1	0
Access : POR	RW : 00		RW : 00		RW : 000			RW : 0
Bit Name	CVTMD[1:0]		TIGSEL[1:0]		CLKSEL[2:0]			ALIGN_EN

This register contains control bit for the 10-bit SAR ADC. The 10-bit SAR ADC controller only exists in the CY8C28x03, CY8C28x13, CY8C28x33, CY8C28x43, and CY8C28x45 PSoC devices. This register is not used for the CY8C28x23 and CY8C28x52 devices.

For additional information, see “Register Definitions” on page 541 in the 10-Bit SAR ADC Controller chapter.

Bit	Name	Description
7:6	**CVTMD[1:0]**	The conversion mode 00b The default mode that only the extra cycle for 6th bit conversion 01b The extra cycle for 6th bit conversion with add-on weak Vref buffer 10b The extra cycle for 7th bit conversion with add-on weak Vref buffer 11b The extra cycle for 1st bit conversion with add-on weak Vref buffer
5:4	**TIGSEL[1:0]**	Auto-trigger source selection 00b TGL 01b TGH 10b TG16BIT 11b TGINCMP
3:1	**CLKSEL[3:0]**	ADC Clock Selection 000b /2 001b /4 010b /6 011b /8 100b /12 101b /16 110b /32 111b /64
0	**ALIGN_EN**	‘1’ to enable auto-align function. The ADC will be driven by outside-block trigger signal. Refer to bit[5:4] of this register and SADC_TSCRx (1,71 and 1,72) and SADC_TSCMPL/H (1,81 and 1,82). **Note** When both ALIGN_EN and FREERUN are zero, the ADC is in software trigger mode; that is, if you write 1 to START bit of SADC_CR0, it triggers one time A-D-C.

13.3.61 SADC_CR2

SAR ADC Control Register 2

Individual Register Names and Addresses:

SADC_CR2: 1,AAh

	7	6	5	4	3	2	1	0
Access : POR	RW : 0	RW : 0	RW : 0	RW : 0	RW : 0			
Bit Name	REFSEL	BUFEN	VDBEN	VDB_CLK	FREERUN			

The 10-bit SAR ADC controller only exists in the CY8C28x03, CY8C28x13, CY8C28x33, CY8C28x43, and CY8C28x45 PSoC devices. This register is not used for the CY8C28x23 and CY8C28x52 devices. For additional information, see “Register Definitions” on page 541 in the 10-Bit SAR ADC Controller chapter.

Bit	Name	Description	
7	**REFSEL**	0	Selects Vdd as reference.
		1	Selects external Vref other than Vdd. See EXTREF in SADC_CR4.
6	**BUFEN**	0	Bypass Vref buffer.
		1	Enable Vref buffer.
5	**VDBEN**	1	Enable voltage doubler in ADC comparator.
4	**VDB_CLK**	0	Select SYSCLK/4 as VDB clock.
		1	Select SYSLCK as VDB clock.
3	**FREERUN**	1	ADC in FREERUN mode if ADC is not in auto-align mode.

13.3.62 SADC_CR3

SAR ADC Control Register 3

Individual Register Names and Addresses:

SADC_CR3: 1,ABh

	7	6	5	4	3	2	1	0
Access : POR	RW : 0					RW : 0		
Bit Name	LALIGN					ADC_TRIM0[2:0]		

The 10-bit SAR ADC controller only exists in the CY8C28x03, CY8C28x13, CY8C28x33, CY8C28x43, and CY8C28x45 PSoC devices. This register is not used for the CY8C28x23 and CY8C28x52 devices. In the table, note that reserved bits are grayed table cells and are not described in the bit description section. Reserved bits should always be written with a value of '0'. For additional information, see "Register Definitions" on page 541 in the 10-Bit SAR ADC Controller chapter.

Bit	Name	Description
7	**LALIGN**	1 Set left-justified data format.
2:0	**ADC_TRIM0[2:0]**	Sent to ADC comparator block directly.

13.3.63 SADC_CR4

SAR ADC Control Register 4

Individual Register Names and Addresses:

SADC_CR4: 1,ACh

	7	6	5	4	3	2	1	0
Access : POR	RW : 0							
Bit Name	EXTREF							

The 10-bit SAR ADC controller only exists in the CY8C28x03, CY8C28x13, CY8C28x33, CY8C28x43, and CY8C28x45 PSoC devices. This register is not used for the CY8C28x23 and CY8C28x52 devices. In the table, note that reserved bits are grayed table cells and are not described in the bit description section. Reserved bits should always be written with a value of '0'. For additional information, see "Register Definitions" on page 541 in the 10-Bit SAR ADC Controller chapter.

Bit	Name	Description	
7	**EXTREF**	0	Selects REFHI as reference input
		1	Selects externally supplied reference voltage on P2[6]

13.3.64 I2Cx_ADDR

I²C Address Register

Individual Register Names and Addresses:

I2C0_ADDR : 1,ADh I2C1_ADDR : 1,AEh

	7	6	5	4	3	2	1	0
Access : POR	RW:0	RW : 000000						
Bit Name	HwAddrEn	Addr[6:0]						

The I²C address register is used to configure the hardware address automatic comparison feature so that the microcontroller will not be disturbed by an unwanted slave request. When HwAddrEn is enabled, the 7-bit address should be stored in Addr[6:0]; there is an interrupt only when the received address matches the stored address.

The hardware address automatic compare feature is available in slave only mode; master/slave mode is not supported. Note that the second I²C block is available in the CY8C28x03, CY8C28x23, CY8C28x43, and CY8C28x45 PSoC devices only. For additional information, see “Register Definitions” on page 497 in the I²C chapter.

Bit	Name	Description	
7	**HwAddrEn**	1	Enable hardware address comparison feature. Only supports 7-bit address. When you enable the hardware address comparison feature, I²C block will not support the special system address definition which is listed in I²C V2.1 spec, section 10 (for example: general call address, CBUS address, 10-bit slave address, and so on).
		0	Disable hardware address comparison feature.
6:0	**Addr**	Slave Address bits hold the slave's own device address.	

13.3.65 AMUX_CLK

Analog Mux Clock Register

Individual Register Names and Addresses:

AMUX_CLK: 1,AFh

2 Column	7	6	5	4	3	2	1	0
Access : POR			RW : 0	RW : 0	RW : 0		RW : 0	
Bit Name			CLKTOR	CLKTOL	CLK1SYNC[1:0]		CLK0SYNC[1:0]	

This register is used to adjust the phase of the clock to the analog mux bus.

This register is only used by the CY8C28xxx PSoC devices. In the table, note that reserved bits are grayed table cells and are not described in the bit description section. Reserved bits should always be written with a value of '0'. For additional information, refer to the "Register Definitions" on page 528 in the I/O Analog Multiplexer chapter.

Bits	Name	Description
5	**CLKTOR**	0 Select MUXCLK1 as clock to drive right side Amuxbus1's IOMUX. 1 Select MUXCLK0 as clock to drive right side Amuxbus1's IOMUX. This bit is only available in the CY8C28xxx PSoC device.
4	**CLKTOL**	0 Select MUXCLK0 as clock to drive left side Amuxbus0's IOMUX. 1 Select MUXCLK1 as clock to drive left side Amuxbus0's IOMUX. This bit is only available in the CY8C28xxx PSoC device.
3:2	**CLK1SYNC[1:0]**	Synchronizes the right side MUXCLK (MUXCLK1). The right side MUXCLK that drives switching on the analog mux right (Amuxbus1) can be synchronized to one of four phases, as listed. These settings can be used to optimize noise performance by varying the analog mux sampling point relative to the system clock. 00b Synchronize to SYSCLK rising edge. 01b Synchronize to delayed (approximately 5 ns) SYSCLK rising edge. 10b Synchronize to SYSCLK falling edge. 11b Synchronize to early (approximately 5 ns) SYSCLK rising edge. These bits are only available in the CY8C28xxx PSoC device.
1:0	**CLK0SYNC[1:0]**	Synchronizes the left side MUXCLK (MUXCLK0). The left side MUXCLK that drives switching on the analog mux left (Amuxbus0) can be synchronized to one of four phases, as listed. These settings can be used to optimize noise performance by varying the analog mux sampling point relative to the system clock. 00b Synchronize to SYSCLK rising edge. 01b Synchronize to delayed (approximately 5 ns) SYSCLK rising edge. 10b Synchronize to SYSCLK falling edge. 11b Synchronize to early (approximately 5 ns) SYSCLK rising edge.

13.3.66 GDI_O_IN

Global Digital Interconnect Odd Inputs Register

Individual Register Names and Addresses:

GDI_O_IN: 1,D0h

	7	6	5	4	3	2	1	0
Access : POR	RW : 0	RW : 0	RW : 0	RW : 0	RW : 0	RW : 0	RW : 0	RW : 0
Bit Name	GIONOUT7	GIONOUT6	GIONOUT5	GIONOUT4	GIONOUT3	GIONOUT2	GIONOUT1	GIONOUT0

This register is used to configure a global input to drive a global output.

For additional information, refer to the “Register Definitions” on page 322 in the Global Digital Interconnect chapter.

Bit	Name	Description	
7	**GIONOUT7**	0	No connection between GIO[7]/GIO[6] to GOO[7]
		1	Allow GIO[7]/GIO[6] to drive GOO[7] depending on the setting in GDI_O_IN_CR.
6	**GIONOUT6**	0	No connection between GIO[6]/GIO[5] to GOO[6]
		1	Allow GIO[6]/GIO[5] to drive GOO[6] depending on the setting in GDI_O_IN_CR.
5	**GIONOUT5**	0	No connection between GIO[5]/GIO[4] to GOO[5]
		1	Allow GIO[5]/GIO[4] to drive GOO[5] depending on the setting in GDI_O_IN_CR.
4	**GIONOUT4**	0	No connection between GIO[4]/GIO[3] to GOO[4]
		1	Allow GIO[4]/GIO[3] to drive GOO[4] depending on the setting in GDI_O_IN_CR.
3	**GIONOUT3**	0	No connection between GIO[3]/GIO[2] to GOO[3]
		1	Allow GIO[3]/GIO[2] to drive GOO[3] depending on the setting in GDI_O_IN_CR.
2	**GIONOUT2**	0	No connection between GIO[2]/GIO[1] to GOO[2]
		1	Allow GIO[2]/GIO[1] to drive GOO[2] depending on the setting in GDI_O_IN_CR.
1	**GIONOUT1**	0	No connection between GIO[1]/GIO[0] to GOO[1]
		1	Allow GIO[1]/GIO[0] to drive GOO[1] depending on the setting in GDI_O_IN_CR.
0	**GIONOUT0**	0	No connection between GIO[0]/GIO[7] to GOO[0]
		1	Allow GIO[0]/GIO[7] to drive GOO[0] depending on the setting in GDI_O_IN_CR.

13.3.67 GDI_E_IN

Global Digital Interconnect Even Inputs Register

Individual Register Names and Addresses:

GDI_E_IN: 1,D1h

	7	6	5	4	3	2	1	0
Access : POR	RW : 0	RW : 0	RW : 0	RW : 0	RW : 0	RW : 0	RW : 0	RW : 0
Bit Name	GIENOUT7	GIENOUT6	GIENOUT5	GIENOUT4	GIENOUT3	GIENOUT2	GIENOUT1	GIENOUT0

This register is used to configure a global input to drive a global output.

For additional information, refer to the “Register Definitions” on page 322 in the Global Digital Interconnect chapter.

Bit	Name	Description	
7	**GIENOUT7**	0	No connection between GIE[7]/GIE[6] to GOE[7]
		1	Allow GIE[7]/GIE[6] to drive GOE[7] depending on the setting in GDI_E_IN_CR.
6	**GIENOUT6**	0	No connection between GIE[6]/GIE[5] to GOE[6]
		1	Allow GIE[6]/GIE[5] to drive GOE[6] depending on the setting in GDI_E_IN_CR.
5	**GIENOUT5**	0	No connection between GIE[5]/GIE[4] to GOE[5]
		1	Allow GIE[5]/GIE[4] to drive GOE[5] depending on the setting in GDI_E_IN_CR.
4	**GIENOUT4**	0	No connection between GIE[4]/GIE[3] to GOE[4]
		1	Allow GIE[4]/GIE[3] to drive GOE[4] depending on the setting in GDI_E_IN_CR.
3	**GIENOUT3**	0	No connection between GIE[3]/GIE[2] to GOE[3]
		1	Allow GIE[3]/GIE[2] to drive GOE[3] depending on the setting in GDI_E_IN_CR.
2	**GIENOUT2**	0	No connection between GIE[2]/GIE[1] to GOE[2]
		1	Allow GIE[2]/GIE[1] to drive GOE[2] depending on the setting in GDI_E_IN_CR.
1	**GIENOUT1**	0	No connection between GIE[1]/GIE[0] to GOE[1]
		1	Allow GIE[1]/GIE[0] to drive GOE[1] depending on the setting in GDI_E_IN_CR.
0	**GIENOUT0**	0	No connection between GIE[0]/GIE[7] to GOE[0]
		1	Allow GIE[0]/GIE[7] to drive GOE[0] depending on the setting in GDI_E_IN_CR.

13.3.68 GDI_O_OU

Global Digital Interconnect Odd Outputs Register

Individual Register Names and Addresses:

GDI_O_OU: 1,D2h

	7	6	5	4	3	2	1	0
Access : POR	RW : 0	RW : 0	RW : 0	RW : 0	RW : 0	RW : 0	RW : 0	RW : 0
Bit Name	GOOUTIN7	GOOUTIN6	GOOUTIN5	GOOUTIN4	GOOUTIN3	GOOUTIN2	GOOUTIN1	GOOUTIN0

This register is used to configure a global output to drive a global input.

For additional information, refer to the “Register Definitions” on page 322 in the Global Digital Interconnect chapter.

Bit	Name	Description	
7	**GOOUTIN7**	0	No connection between GIO[7]/GIO[6] to GOO[7]
		1	Allow GOO[7]/GOO[6] to drive GIO[7] depending on the setting in GDI_O_OU_CR.
6	**GOOUTIN6**	0	No connection between GIO[6]/GIO[5] to GOO[6]
		1	Allow GOO[6]/GOO[5] to drive GIO[6] depending on the setting in GDI_O_OU_CR.
5	**GOOUTIN5**	0	No connection between GIO[0]/GIO[4] to GOO[5]
		1	Allow GOO[5]/GOO[4] to drive GIO[5] depending on the setting in GDI_O_OU_CR.
4	**GOOUTIN4**	0	No connection between GIO[4]/GIxO[3] to GOO[4]
		1	Allow GOO[4]/GOO[3] to drive GIO[4] depending on the setting in GDI_O_OU_CR.
3	**GOOUTIN3**	0	No connection between GIO[3]/GIO[2] to GOO[3]
		1	Allow GOO[3]/GOO[2] to drive GIO[3] depending on the setting in GDI_O_OU_CR.
2	**GOOUTIN2**	0	No connection between GIO[2]/GIO[1] to GOO[2]
		1	Allow GOO[2]/GOO[1] to drive GIO[2] depending on the setting in GDI_O_OU_CR.
1	**GOOUTIN1**	0	No connection between GIO[1]/GIO[0] to GOO[1]
		1	Allow GOO[1]/GOO[0] to drive GIO[1] depending on the setting in GDI_O_OU_CR.
0	**GOOUTIN0**	0	No connection between GIO[0]/GIO[7] to GOO[0]
		1	Allow GOO[0]/GOO[7] to drive GIO[0] depending on the setting in GDI_O_OU_CR.

13.3.69 GDI_E_OU

Global Digital Interconnect Even Outputs Register

Individual Register Names and Addresses:

GDI_E_OU: 1,D3h

	7	6	5	4	3	2	1	0
Access : POR	RW : 0	RW : 0	RW : 0	RW : 0	RW : 0	RW : 0	RW : 0	RW : 0
Bit Name	GOEUTIN7	GOEUTIN6	GOEUTIN5	GOEUTIN4	GOEUTIN3	GOEUTIN2	GOEUTIN1	GOEUTIN0

This register is used to configure a global output to drive a global input.

For additional information, refer to the “Register Definitions” on page 322 in the Global Digital Interconnect chapter.

Bit	Name	Description	
7	**GOEUTIN7**	0	No connection between GIE[7]/GIE[6] to GOE[7]
		1	Allow GOE[7]/GOE[6] to drive GIE[7 depending on the setting in GDI_E_OU_CR.
6	**GOEUTIN6**	0	No connection between GIE[6]/GIE[5] to GOE[6]
		1	Allow GOE[6]/GOE[5] to drive GIE[6] depending on the setting in GDI_E_OU_CR.
5	**GOEUTIN5**	0	No connection between GIE[0]/GIE[4] to GOE[5]
		1	Allow GOE[5]/GOE[4] to drive GIE[5] depending on the setting in GDI_E_OU_CR.
4	**GOEUTIN4**	0	No connection between GIE[4]/GIE[3] to GOE[4]
		1	Allow GOE[4]/GOE[3] to drive GIE[4] depending on the setting in GDI_E_OU_CR.
3	**GOEUTIN3**	0	No connection between GIE[3]/GIE[2] to GOE[3]
		1	Allow GOE[3]/GOE[2] to drive GIE[3] depending on the setting in GDI_E_OU_CR.
2	**GOEUTIN2**	0	No connection between GIE[2]/GIE[1] to GOE[2]
		1	Allow GOE[2]/GOE[1] to drive GIE[2] depending on the setting in GDI_E_OU_CR.
1	**GOEUTIN1**	0	No connection between GIE[1]/GIE[0] to GOE[1]
		1	Allow GOE[1]/GOE[0] to drive GIE[1] depending on the setting in GDI_E_OU_CR.
0	**GOEUTIN0**	0	No connection between GIE[0]/GIE[7] to GOE[0]
		1	Allow GOE[0]/GOE[7] to drive GIE[0] depending on the setting in GDI_E_OU_CR.

13.3.70 DECx_CR

Decimator Type 2 Control Register

Individual Register Names and Addresses:

DEC0_CR : 1,D4h DEC1_CR : 1,D5h DEC2_CR : 1,D6h DEC3_CR : 1,D7h

	7	6	5	4	3	2	1	0
Access : POR	RW : 0		RW : 0		RW : 0	RW : 0		
Bit Name	Mode[1:0]		Data Out Shift[1:0]		Data Format	Decimation Rate[2:0]		

This register is used to configure the decimators before use.

This register is only available for the CY8C28xxx PSoC devices with type 2 decimator blocks. For additional information, refer to the “Register Definitions” on page 488 in the Decimator chapter.

Bits	Name	Description	
7:6	**Mode[1:0]**	00b	Compatibility mode (old UM works)
		01b	Incremental mode
		10b	Full algorithm
		11b	Reserved
5:4	**Data Out Shift[1:0]**	00b	No shift
		01b	One shift
		10b	Two shifts
		11b	Four shifts
3	**Data Format**	Controls how the input data stream is interpreted by the integrator.	
		0	A 0/1 input is interpreted as -1/+1.
		1	A 0/1 input is interpreted as 0/+1.
2:0	**Decimation Rate[2:0]**	000b	Off
		001b	32
		010b	50
		011b	64
		100b	125
		101b	128
		110b	250
		111b	256
		Note If this is set to anything other than Off, the digital block selected by DCLKS will be ignored.	

13.3.71 MUX_CRx

Analog Mux Port Bit Enables Register

Individual Register Names and Addresses:

MUX_CR0 : 1,D8h
MUX_CR1 : 1,D9h
MUX_CR2 : 1,DAh
MUX_CR3 : 1,DBh
MUX_CR4 : 1,ECh
MUX_CR5 : 1,EDh

	7	6	5	4	3	2	1	0
Access : POR	RW : 00							
Bit Name	ENABLE[7:0]							

This register is used to control the connection between the analog mux bus and the corresponding pin.

Port 3 and the upper 4 bits of the MUX_CR3 register are reserved and will return zeros when read. For additional information, refer to the “Register Definitions” on page 528 in the I/O Analog Multiplexer chapter.

Bits	Name	Description
7:0	**ENABLE[7:0]**	Each bit controls the connection between the analog mux bus and the corresponding port pin. For example, MUX_CR2[3] controls the connection to bit 3 in Port 2. Any number of pins may be connected at the same time. Note that if a precharge clock is selected in the AMUX_CFG register, the connection to the mux bus will be switched on and off under hardware control. 0 No connection between port pin and analog mux bus. 1 Connect port pin to analog mux bus.

13.3.72 IDAC_CR1

IDAC Control Register 1

Individual Register Names and Addresses:

IDAC_CR1 : 1,DCh

	7	6	5	4	3	2	1	0
Access : POR	RW : 0	RW : 0	RW : 00	RW : 1000				RW : 0
Bit Name	EN1	MuxClkGE1	ICEN	IDAC_TRIM				Double_Current

This register contains the control bits for the IDAC current that drives the analog mux bus and for selecting the split configuration.

For additional information, refer to the "Register Definitions" on page 528 in the I/O Analog Multiplexer chapter.

Bits	Name	Description
7	**EN1**	0 Disables right IDAC (IDAC1). 1 Enables right IDAC (IDAC1).
6	**MuxClkGE1**	0 Disables driving right side MUXCLK (MUXCLK1) to GOO[7]. 1 Enables driving right side MUXCLK (MUXCLK1) to GOO[7].
5	**ICEN**	0 Disables this feature: both IDAC will be controlled by their own registers, including data and output on/off registers. 1 Enables this feature: both IDAC0 and IDAC1 will use the IDAC0_D register for IDAC current setting when their output enable signal is high, and it will automatically switch to use IDAC1_D register for IDAC setting when their output enable signal is low.
4:1	**IDAC_TRIM[3:0]**	These signals go to PLL block and are used to trim IUNIT32 current output. The default value is 1000b (ideally it is 10 µA). Each step will change the current approximately by 3%.
0	**Double_Current**	This bit is used for IDAC current range control; it will combine with IDAC_CR0[3].IRANGE to define four different IDAC current range.

Double_Current	**IDAC_CR0[3].IRANGE**	**Current Range**
0 (default)	0 (default)	Reserved
1	0	Maximum 91.03 µA
0	1	Maximum 318.75 µA
1	1	Maximum 637.5 µA

13.3.73 OSC_GO_EN

Oscillator to Global Outputs Enable Register

Individual Register Names and Addresses:

OSC_GO_EN: 1,DDh

	7	6	5	4	3	2	1	0
Access : POR	RW : 0	RW : 0	RW : 0	RW : 0	RW : 0	RW : 0	RW : 0	RW : 0
Bit Name	SLPINT	VC3	VC2	VC1	SYSCLKX2	SYSCLK	CLK24M	CLK32K

This register is used to enable tri-state buffers that connect specific system clocks to specific global output even nets.

For additional information, refer to the “Register Definitions” on page 469 in the Digital Clocks chapter.

Bit	Name		Description
7	**SLPINT**	0	The sleep interrupt is not driven onto a global net.
		1	The sleep interrupt is driven onto GOE[7].
6	**VC3**	0	The VC3 clock is not driven onto a global net
		1	The VC3 clock is driven onto GOE[6]
5	**VC2**	0	The VC2 clock is not driven onto a global net
		1	The VC2 clock is driven onto GOE[5]
4	**VC1**	0	The VC1 clock is not driven onto a global net
		1	The VC1 clock is driven onto GOE[4]
3	**SYSCLKX2**	0	The 2 times system clock is not driven onto a global net
		1	The 2 times system clock is driven onto GOE[3]
2	**SYSCLK**	0	The system clock is not driven onto a global net
		1	The system clock is driven onto GOE[2]
1	**CLK24M**	0	The 24 MHz clock is not driven onto a global net
		1	The 24 MHz system clock is driven onto GOE[1]
0	**CLK32K**	0	The 32 kHz clock is not driven onto a global net
		1	The 32 kHz system clock is driven onto GOE[0]

13.3.74 OSC_CR4

Oscillator Control Register 4

Individual Register Names and Addresses:

OSC_CR4: 1,DEh

	7	6	5	4	3	2	1	0
Access : POR							RW : 0	
Bit Name							VC3 Input Select[1:0]	

This register selects the input clock to variable clock 3 (VC3).

In the table, note that reserved bits are grayed table cells and are not described in the bit description section. Reserved bits should always be written with a value of ‘0’. For additional information, refer to the “Register Definitions” on page 469 in the Digital Clocks chapter.

Bit	Name	Description
1:0	**VC3 Input Select[1:0]**	Selects the clocking source for the VC3 Clock Divider. 00b SYSCLK 01b VC1 10b VC2 11b SYSCLKX2

13.3.75 OSC_CR3

Oscillator Control Register 3

Individual Register Names and Addresses:

OSC_CR3: 1,DFh

	7	6	5	4	3	2	1	0
Access : POR	RW : 00							
Bit Name	VC3 Divider[7:0]							

This register selects the divider value for variable clock 3 (VC3).

The output frequency of the VC3 Clock Divider is the input frequency divided by the value in this register, plus one. For example, if this register contains 07h, the clock frequency output from the VC3 Clock Divider will be one eighth the input frequency. For additional information, refer to the “Register Definitions” on page 469 in the Digital Clocks chapter.

Bit	Name	Description
7:0	**VC3 Divider[7:0]**	Refer to the OSC_CR4 register. 0000 0000b Input Clock 0000 0001b Input Clock / 2 0000 0010b Input Clock / 3 0000 0011b Input Clock / 4 ... ... 1111 1100b Input Clock / 253 1111 1101b Input Clock / 254 1111 1110b Input Clock / 255 1111 1111b Input Clock / 256

13.3.76 OSC_CR0

Oscillator Control Register 0

Individual Register Names and Addresses:

OSC_CR0: 1,E0h

	7	6	5	4	3	2	1	0
Access : POR	RW : 0	RW : 0	RW : 0	RW : 0		RW : 0		
Bit Name	32k Select	PLL Mode	No Buzz	Sleep[1:0]		CPU Speed[2:0]		

This register is used to configure various features of internal clock sources and clock nets.

For additional information, refer to the "Register Definitions" on page 469 in the Digital Clocks chapter.

Bit	Name	Description
7	**32k Select**	0 Internal low precision 32 kHz oscillator 1 External crystal 32.768 kHz oscillator
6	**PLL Mode**	0 Disabled 1 Enabled. Internal main oscillator is frequency locked to External Crystal Oscillator.
5	**No Buzz**	0 BUZZ bandgap during power down. 1 Bandgap is always powered even during sleep.
4:3	**Sleep[1:0]**	Sleep Interval when SLP_EXTEND=0 00b 1.95 ms (512 Hz) 01b 15.6 ms (64 Hz) 10b 125 ms (8 Hz) 11b 1s (1 Hz) Sleep Interval when SLP_EXTEND=1 00b 2s (1/2 Hz) 01b 4s (1/4 Hz) 10b 8s (1/8 Hz) 11b 16s (1/16 Hz)
2:0	**CPU Speed[2:0]**	These bits set the CPU clock speed, based on the system clock (SYSCLK). SYSCLK is 24 MHz by default, but it can optionally be set to 6 MHz on some PSoC devices (see the "Architectural Description" on page 81), or driven from an external clock.

	6 MHz IMO	24 MHz IMO	External Clock
000b	750 kHz	3 MHz	EXTCLK / 8
001b	1.5 MHz	6 MHz	EXTCLK / 4
010b	3 MHz	12 MHz	EXTCLK / 2
011b	6 MHz	24 MHz	EXTCLK / 1
100b	375 kHz	1.5 MHz	EXTCLK / 16
101b	187.5 kHz	750 kHz	EXTCLK / 32
110b	46.9 kHz	187.5 kHz	EXTCLK / 128
111b	23.4 kHz	93.7 kHz	EXTCLK / 256

13.3.77 OSC_CR1

Oscillator Control Register 1

Individual Register Names and Addresses:

OSC_CR1: 1,E1h

	7	6	5	4	3	2	1	0
Access : POR	RW : 0				RW : 0			
Bit Name	VC1 Divider[3:0]				VC2 Divider[3:0]			

This register selects the divider value for variable clocks 1 and 2 (VC1 and VC2).

For additional information, refer to the "Register Definitions" on page 469 in the Digital Clocks chapter.

Bit	Name	Description		
7:4	**VC1 Divider[3:0]**		**Internal Main Oscillator**	**External Clock**
		0000b	24 MHz	EXTCLK / 1
		0001b	12 MHz	EXTCLK / 2
		0010b	8 MHz	EXTCLK / 3
		0011b	6 MHz	EXTCLK / 4
		0100b	4.8 MHz	EXTCLK / 5
		0101b	4 MHz	EXTCLK / 6
		0110b	3.43 MHz	EXTCLK / 7
		0111b	3 MHz	EXTCLK / 8
		1000b	2.67 MHz	EXTCLK / 9
		1001b	2.40 MHz	EXTCLK / 10
		1010b	2.18 MHz	EXTCLK / 11
		1011b	2.00 MHz	EXTCLK / 12
		1100b	1.85 MHz	EXTCLK / 13
		1101b	1.71 MHz	EXTCLK / 14
		1110b	1.6 MHz	EXTCLK / 15
		1111b	1.5 MHz	EXTCLK / 16
3:0	**VC2 Divider[3:0]**		**Internal Main Oscillator**	**External Clock**
		0000b	(24 / (OSC_CR1[7:4]+1)) / 1	(EXTCLK / (OSC_CR1[7:4]+1)) / 1
		0001b	(24 / (OSC_CR1[7:4]+1)) / 2	(EXTCLK / (OSC_CR1[7:4]+1)) / 2
		0010b	(24 / (OSC_CR1[7:4]+1)) / 3	(EXTCLK / (OSC_CR1[7:4]+1)) / 3
		0011b	(24 / (OSC_CR1[7:4]+1)) / 4	(EXTCLK / (OSC_CR1[7:4]+1)) / 4
		0100b	(24 / (OSC_CR1[7:4]+1)) / 5	(EXTCLK / (OSC_CR1[7:4]+1)) / 5
		0101b	(24 / (OSC_CR1[7:4]+1)) / 6	(EXTCLK / (OSC_CR1[7:4]+1)) / 6
		0110b	(24 / (OSC_CR1[7:4]+1)) / 7	(EXTCLK / (OSC_CR1[7:4]+1)) / 7
		0111b	(24 / (OSC_CR1[7:4]+1)) / 8	(EXTCLK / (OSC_CR1[7:4]+1)) / 8
		1000b	(24 / (OSC_CR1[7:4]+1)) / 9	(EXTCLK / (OSC_CR1[7:4]+1)) / 9
		1001b	(24 / (OSC_CR1[7:4]+1)) / 10	(EXTCLK / (OSC_CR1[7:4]+1)) / 10
		1010b	(24 / (OSC_CR1[7:4]+1)) / 11	(EXTCLK / (OSC_CR1[7:4]+1)) / 11
		1011b	(24 / (OSC_CR1[7:4]+1)) / 12	(EXTCLK / (OSC_CR1[7:4]+1)) / 12
		1100b	(24 / (OSC_CR1[7:4]+1)) / 13	(EXTCLK / (OSC_CR1[7:4]+1)) / 13
		1101b	(24 / (OSC_CR1[7:4]+1)) / 14	(EXTCLK / (OSC_CR1[7:4]+1)) / 14
		1110b	(24 / (OSC_CR1[7:4]+1)) / 15	(EXTCLK / (OSC_CR1[7:4]+1)) / 15
		1111b	(24 / (OSC_CR1[7:4]+1)) / 16	(EXTCLK / (OSC_CR1[7:4]+1)) / 16

13.3.78 OSC_CR2

Oscillator Control Register 2

Individual Register Names and Addresses:

OSC_CR2: 1,E2h

	7	6	5	4	3	2	1	0
Access : POR	RW : 0			RW : 0	RW : 0	RW : 0	RW : 0	RW : 0
Bit Name	PLLGAIN			SLP_EXTEND	WDR32_SE	EXTCLKEN	RSVD	SYSCLKX2DIS

This register is used to configure various features of internal clock sources and clock nets.

In OCD mode (OCDM = 1), bits [1:0] have no effect. In the table, note that reserved bits are grayed table cells and are not described in the bit description section. Reserved bits should always be written with a value of '0'. For additional information, refer to the "Register Definitions" on page 469 in the Digital Clocks chapter.

Bit	Name	Description
7	**PLLGAIN**	Phase-locked loop gain. 0 Recommended value, normal gain. 1 Reduced gain to make PLL more tolerant to noisy or jittery crystal input.
4	**SLP_EXTEND**	Extend sleep timer period. SLP_EXTEND = 0 OSC_CR0 register. SLEEP[1:0] 00b 2 ms 01b 16 ms 10b 128 ms 11b 1s SLP_EXTEND = 1 OSC_CR0 register, SLEEP[1:0] 00b 2s 01b 4s 10b 8s 11b 16s
3	**WDR32_SE**	Watchdog clock source selection. 0 The same 32 kHz clock source as system setting, default mode. 1 Uses internal 32 kHz oscillator as clock source, even if external 32 kHz clock source is enabled.
2	**EXTCLKEN**	External clock mode enable. 0 Disabled. Operate from internal main oscillator. 1 Enabled. Operate from clock supplied at port P1[4].
1	**RSVD**	Reserved bit. This bit should always be 0.
0	**SYSCLKX2DIS**	48 MHz clock source disable. 0 Enabled. If enabled, system clock net is forced on. 1 Disabled for power reduction.

13.3.79 VLT_CR

Voltage Monitor Control Register

Individual Register Names and Addresses:

VLT_CR: 1,E3h

	7	6	5	4	3	2	1	0
Access : POR	RW : 0		RW : 0		RW : 0	RW : 0		
Bit Name	SMP		PORLEV[1:0]		LVDTBEN	VM[2:0]		

This register is used to set the trip points for POR, LVD, and the supply pump.

Note that reserved bits are grayed table cells and are not described in the bit description section. Reserved bits should always be written with a value of '0'. For additional information, refer to the "Register Definitions" on page 523 in the POR and LVD chapter.

Bit	Name	Description
7	**SMP**	Switch Mode Pump disable for those PSoC devices with this feature. 0 SMP enabled. 1 SMP disabled.
5:4	**PORLEV[1:0]**	Sets the POR level per the DC electrical specifications in the PSoC device data sheet. 00b POR level for 2.4 V or 3 V operation (refer to the PSoC device data sheet) 01b POR level for 3.0 V or 4.5 V operation (refer to the PSoC device data sheet) 10b POR level for 4.75 V operation 11b Reserved
3	**LVDTBEN**	Enables reset of CPU speed register by LVD comparator output. 0 Disables CPU speed throttle-back. 1 Enables CPU speed throttle-back.
2:0	**VM[2:0]**	Sets the LVD and pump levels per the DC electrical specifications in the PSoC device data sheet, for those PSoC devices with this feature. 000b Lowest voltage setting 001b 010b . 011b . 100b . 101b 110b 111b Highest voltage setting

13.3.80 VLT_CMP

Voltage Monitor Comparators Register

Individual Register Names and Addresses:

VLT_CMP: 1,E4h

	7	6	5	4	3	2	1	0
Access : POR						R : 0	R : 0	R : 0
Bit Name						PUMP	LVD	PPOR

This register is used to read the state of internal supply voltage monitors.

In the table, note that reserved bits are grayed table cells and are not described in the bit description section. Reserved bits should always be written with a value of '0'. For additional information, refer to the "Register Definitions" on page 523 in the POR and LVD chapter.

Bit	Name	Description
2	**PUMP**	Read state of pump comparator. 0 Vdd is above trip point. 1 Vdd is below trip point.
1	**LVD**	Reads state of LVD comparator. 0 Vdd is above LVD trip point. 1 Vdd is below LVD trip point.
0	**PPOR**	Reads state of Precision POR comparator (only useful with PPOR reset disabled, with PORLEV[1:0] in VLT_CR register set to 11b). 0 Vdd is above PPOR trip voltage. 1 Vdd is below PPOR trip voltage.

13.3.81 ADCx_TR

Type E ADC Trim Register

Individual Register Names and Addresses:

ADC0_TR : 1,E5h ADC1_TR : 1,E6h

2L* Column	7	6	5	4	3	2	1	0
Access : POR	RW : 00							
Bit Name	CAPVAL_[7:0]							

* This table shows the two column limited functionality of the CY8C28xxx PSoC devices for this register.

This register controls a combination of capacitor and current values that determine the slope of the ADC voltage ramp.

ADC0_TR is the ADC column 0 trim register and ADC1_TR is the ADC column 1 trim register. For additional information, refer to the “Register Definitions” on page 452 in the Two Column Limited Analog System chapter.

Bits	Name	Description
7:0	CAPVAL_[7:0]	Controls, in binary weighted segments, the capacitor trim for ADC and general analog operation. This trim has a 16-1 range. By default (0000b), all capacitors are switched into the circuit, which is the maximum capacitance. 0 Switches that binary weighted capacitor segment into the circuit (more capacitance). 1 Switches that binary weighted capacitor segment out of the circuit (less capacitance).

13.3.82 IDAC_MODE

IDAC Mode Control Register

Individual Register Names and Addresses:

IDAC_MODE: 1,E7h

	7	6	5	4	3	2	1	0
Access : POR	RW : 00		RW : 00		RW : 00		RW : 00	
Bit Name	IDAC1_MD[3:0]				IDAC0_MD[3:0]			

This register controls the selection of the IDAC ON/OFF Control.

For additional information, refer to the “Register Definitions” on page 528 in the I/O Analog Multiplexer chapter.

Bit	Name	Description
7:1	**IDACx_MD[3:0]**	Select the signal to control IDAC ON/OFF. 0000b Always ON 0001b Reserved 0010b Reserved 0011b Reserved 0100b DECD[0], Decimator 0 data input 0101b DECD[1], Decimator 1 data input 0110b DECD[2], Decimator 2 data input 0111b DECD[3], Decimator 3 data input 1000b ACC_CMP[0], ACC 0 compare bus 1001b ACC_CMP[1], ACC 1 compare bus 1010b ACC_CMP[2], ACC 2 compare bus 1011b ACC_CMP[3], ACC 3 compare bus 1100b Reserved 1101b Reserved 1110b ACE_CMPFF[0], ACE 0 compare bus 1111b ACE_CMPFF[1], ACE 1 compare bus

13.3.83 IMO_TR

Internal Main Oscillator Trim Register

Individual Register Names and Addresses:

IMO_TR: 1,E8h

	7	6	5	4	3	2	1	0
Access : POR	W : 00							
Bit Name	Trim[7:0]							

This register is used to manually center the oscillator's output to a target frequency.

It is strongly recommended that the user not alter this register's values. The value in this register should not be changed. For additional information, refer to the "Register Definitions" on page 82 in the Internal Main Oscillator chapter.

Bit	Name	Description
7:0	**Trim[7:0]**	The value of this register is used to trim the Internal Main Oscillator. Its value is set to the best value for the device during boot. ***The value of these bits should not be changed***. 0000 0000b Lowest frequency setting 0000 0001b ... ... 0111 1111b 1000 0000b Design center setting 1000 0001b ... ... 1111 1110b 1111 1111b Highest frequency setting

13.3.84 ILO_TR

Internal Low Speed Oscillator Trim Register

Individual Register Names and Addresses:

ILO_TR: 1,E9h

	7	6	5	4	3	2	1	0
Access : POR			RW : 0		RW : 0			
Bit Name			Bias Trim[1:0]		Freq Trim[3:0]			

This register sets the adjustment for the Internal Low Speed Oscillator (ILO).

It is strongly recommended that the user not alter this register's values. The trim bits are set to factory specifications and should not be changed. In the table, note that reserved bits are grayed table cells and are not described in the bit description section. Reserved bits should always be written with a value of '0'. For additional information, refer to the "Register Definitions" on page 85 in the Internal Low Speed Oscillator chapter.

Bit	Name	Description
5:4	**Bias Trim[1:0]**	The value of this register is used to trim the Internal Low Speed Oscillator. Its value is set to the device specific, best value during boot. ***The value of these bits should not be changed.*** 00b Medium bias 01b Maximum bias (recommended) 10b Minimum bias 11b Intermediate Bias * * About 15% higher than the minimum bias.
3:0	**Freq Trim[3:0]**	The value of this register is used to trim the Internal Low Speed Oscillator. Its value is set to the device specific, best value during boot. ***The value of these bits should not be changed.***

13.3.85 BDG_TR

Bandgap Trim Register

Individual Register Names and Addresses:

BDG_TR: 1,EAh

	7	6	5	4	3	2	1	0
Access : POR		RW : 0	RW : 01		RW : 8h			
Bit Name		AGNDBYP	TC[1:0]		V[3:0]			

This register is used to adjust the bandgap and add an RC filter to AGND.

Note that reserved bits are grayed table cells and are not described in the bit description section. Reserved bits should always be written with a value of '0'. For additional information, refer to the "Register Definitions" on page 511 in the Internal Voltage Reference chapter.

Bit	Name	Description
6	**AGNDBYP**	If set, an external bypass capacitor on AGND may be connected to Port 2[4]. 0 Disable 1 Enable
5:4	**TC[1:0]**	The value of these bits is used to trim the temperature coefficient. Their value is set to the best value for the device during boot. ***The value of these bits should not be changed.***
3:0	**V[3:0]**	The value of these bits is used to trim the bandgap reference. Their value is set to the best value for the device during boot. ***The value of these bits should not be changed.***

13.3.86 ECO_TR

External Crystal Oscillator Trim Register

Individual Register Names and Addresses:

ECO_TR: 1,EBh

	7	6	5	4	3	2	1	0
Access : POR	RW : 0							
Bit Name	PSSDC[1:0]							

This register sets the adjustment for the 32.768 kHz External Crystal Oscillator.

The value in this register should not be changed. The value is used to trim the 32.768 kHz external crystal oscillator and is set to the device specific, best value during boot. In the table, note that reserved bits are grayed table cells and are not described in the bit description section. Reserved bits should always be written with a value of '0'. For additional information, refer to the "Register Definitions" on page 89 in the External Crystal Oscillator (ECO) chapter.

Bit	Name	Description
7:6	**PSSDC[1:0]**	Sleep duty cycle. Controls the ratios (in numbers of 32.768 kHz clock periods) of "on" time versus "off" time for PORLVD, Bandgap reference, and pspump. ***These bits should not be changed.*** 00b 1 / 128 01b 1 / 512 10b 1 / 32 11b 1 / 8

13.3.87 IMO_TR1

Internal Main Oscillator Trim Register 1

Individual Register Names and Addresses:

IMO_TR1: 1,EFh

	7	6	5	4	3	2	1	0
Access : POR	RW : 0							
Bit Name							CATA_Trim[1:0]	

This register is used to tune CATA current.

For additional information, refer to the “Register Definitions” on page 82 in the Internal Main Oscillator chapter.

Bit	Name	Description
1:0	CATA_Trim[1:0]	These bits are used to tune CATA current. 00b Largest CATA current (reset value) ... ... 11b Smallest CATA current

13.3.88 FLS_PR1

Flash Program Register 1

Individual Register Names and Addresses:

FLS_PR1: 1,FAh

	7	6	5	4	3	2	1	0
Access : POR								RW : 0
Bit Name								Bank

This register is used to specify which Flash bank should be used for SROM operations.

In the table, note that reserved bits are grayed table cells and are not described in the bit description section. Reserved bits should always be written with a value of '0'. For additional information, refer to the Supervisory ROM (SROM) chapter on page 49.

Bit	Name	Description
0	**Bank**	Selects the active Flash bank for supervisory operations. No affect in User mode. 0 Flash Bank 0 1 Flash Bank 1

13.3.89 IDAC_CR0

IDAC Control Register 0

Individual Register Names and Addresses:

IDAC_CR0 : 1,FDh

	7	6	5	4	3	2	1	0
Access : POR	RW : 0	RW : 0	RW : 0		RW : 0	RW : 0		RW : 0
Bit Name	SplitMux	MuxClkGE0	OSCMD1[1:0]		IRANGE	OSCMD0[1:0]		EN0

This register contains the control bits for the IDAC current that drives the analog mux bus and for selecting the split configuration for the CY8C28xxx PSoC devices.

In the table, note that reserved bits are grayed table cells and are not described in the bit description section. Reserved bits should always be written with a value of ‘0’. For additional information, refer to the “Register Definitions” on page 528 in the I/O Analog Multiplexer chapter.

Bits	Name	Description
7	**SplitMux**	Configures the analog mux bus Left side connects to odd pins (P0[1], P5[5]) and right side connects to even pins (P0[2], P5[6]) with one exception: P0[7] is a right side pin. 0 Split analog mux bus: left side pins connect to Analog Mux Bus Left (Muxbus0) and right side pins connect to Analog Mux Bus Right (Muxbus1). 1 Single analog mux bus.
6	**MuxClkGE0**	Global enable connection for MUXCLK0. 0 Analog mux bus clock not connected to global. 1 Connect analog mux bus clock to global GOO[6].
5:4	**OSCMD1[1:0]**	When set, these bits enable the analog mux bus right (Muxbus1) to reset to Vss whenever the comparator trip point is reached.
3	**IRANGE**	Sets the DAC range. Note that the value for the unit current is found in the PSoC data sheet. 0 Low range 1 High range (16 times low range)
2:1	**OSCMD0[1:0]**	When set, these bits enable the analog mux bus left (Muxbus0) to reset to Vss whenever the comparator trip point is reached. 00b No automatic reset. 01b Reset whenever GOO[4] is high. 10b Reset whenever GOO[5] is high. 11b Reset whenever either GOO[4] or GOO[5] is high.
0	**EN0**	0 IDAC0 function disabled (no DAC current). 1 IDAC0 function enabled. The DAC current charges the analog mux bus. If the SplitMux is set high, the charging current only charges the mux bus left (Muxbus0).

Section D: Digital System

The configurable Digital System section discusses the digital components of the PSoC® device and the registers associated with those components. This section encompasses the following chapters:

- Global Digital Interconnect (GDI) on page 317
- Array Digital Interconnect (ADI) on page 325
- Row Digital Interconnect (RDI) on page 327
- Digital Blocks on page 335

Top-Level Digital Architecture

The following figure displays the top-level architecture of the PSoC's digital system. Each component of the figure is discussed at length in this section.

PSoC Digital System Block Diagram

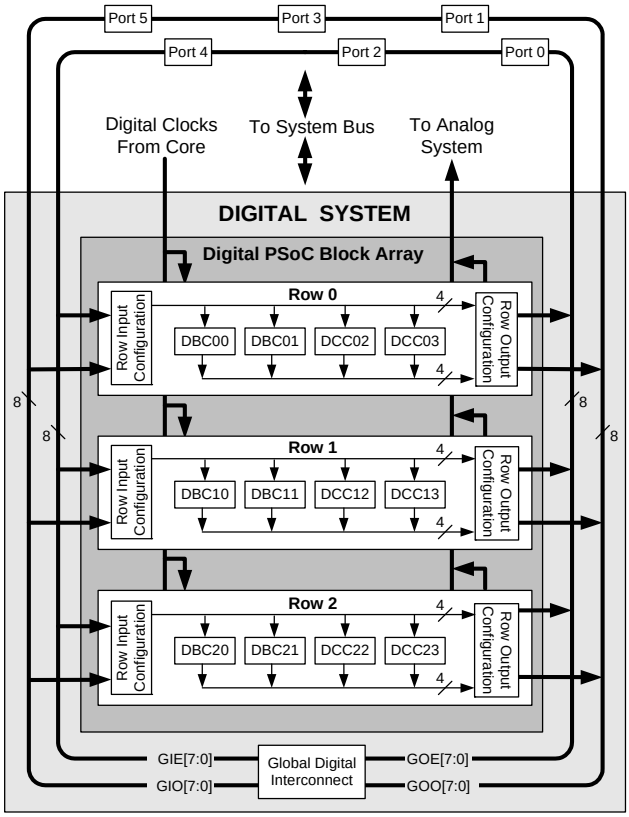

Interpreting the Digital Documentation

Information in this section covers all PSoC devices with a base part number of CY8C28xxx. The primary digital distinction between these devices is the number of digital rows. This can be either 2 or 3 rows. The following table lists the resources available for specific device groups. While reading the digital system section, determine and keep in mind the number of digital rows that are in your device, to accurately interpret this documentation.

PSoC Device Characteristics

PSoC Part Number	Digital I/O (max)	Digital Rows	Digital Blocks	Analog Inputs (max)	Analog Outputs	Analog Columns	Regular Analog Blocks	Limited Analog Blocks
CY8C28x03*	**24**	**3**	**12**	8	0	0	0	0
CY8C28x13*	**40**	**3**	**12**	40	0	2	0	4
CY8C28x23	**44**	**3**	**12**	10	2	2	6	0
CY8C28x33	**40**	**3**	**12**	40	2	4	6	4
CY8C28x43	**44**	**3**	**12**	44	4	4	12	0
CY8C28x45	**44**	**3**	**12**	44	4	4	12	4
CY8C28x52	**24**	**2**	**8**	24	4	4	12	4

* Limited analog functionality.

Digital Register Summary

The following table lists all the PSoC registers for the digital system in address order (Add. column) within their system resource configuration. The bits that are grayed out are reserved bits. If these bits are written, they should always be written with a value of '0'. The naming conventions for the digital row registers and the digital block registers are detailed in their respective table title rows.

Note that all PSoC devices with a base part number of CY8C28xxx fall into one of the following categories with respect to their digital PSoC rows: 3 row device or 2 row device. The "PSoC Digital System Block Diagram" at the beginning of this section illustrates this.

In the following table, the third column from the left titled "Digital Rows" indicates which of the two PSoC device categories the register falls into. To determine the number of digital rows in your PSoC device, refer to the table titled "PSoC Device Characteristics" on page 311.

Summary Table of the Digital Registers

Add.	Name	Digital Rows	Bit 7	Bit 6	Bit 5	Bit 4	Bit 3	Bit 2	Bit 1	Bit 0	Access
GLOBAL DIGITAL INTERCONNECT (GDI) REGISTERS (page 322)											
1,A0h	GDI_O_IN_CR	3, 2,	GDIOICR7	GDIOICR6	GDIOICR5	GDIOICR4	GDIOICR3	GDIOICR2	GDIOICR1	GDIOICR0	RW : 00
1,A1h	GDI_E_IN_CR	3, 2,	GDIEICR7	GDIEICR6	GDIEICR5	GDIEICR4	GDIEICR3	GDIEICR2	GDIEICR1	GDIEICR0	RW : 00
1,A2h	GDI_O_OU_CR	3, 2,	GDIOOCR7	GDIOOCR6	GDIOOCR5	GDIOOCR4	GDIOOCR3	GDIOOCR2	GDIOOCR1	GDIOOCR0	RW : 00
1,A3h	GDI_E_OU_CR	3, 2,	GDIEOCR7	GDIEOCR6	GDIEOCR5	GDIEOCR4	GDIEOCR3	GDIEOCR2	GDIEOCR1	GDIEOCR0	RW : 00
1,D0h	GDI_O_IN	3, 2,	GIONOUT7	GIONOUT6	GIONOUT5	GIONOUT4	GIONOUT3	GIONOUT2	GIONOUT1	GIONOUT0	RW : 00
1,D1h	GDI_E_IN	3, 2,	GIENOUT7	GIENOUT6	GIENOUT5	GIENOUT4	GIENOUT3	GIENOUT2	GIENOUT1	GIENOUT0	RW : 00
1,D2h	GDI_O_OU	3, 2,	GOOUTIN7	GOOUTIN6	GOOUTIN5	GOOUTIN4	GOOUTIN3	GOOUTIN2	GOOUTIN1	GOOUTIN0	RW : 00
1,D3h	GDI_E_OU	3, 2,	GOEUTIN7	GOEUTIN6	GOEUTIN5	GOEUTIN4	GOEUTIN3	GOEUTIN2	GOEUTIN1	GOEUTIN0	RW : 00
DIGITAL ROW REGISTERS (page 329)											
x,B0h	RDI0RI	3, 2,	RI3[1:0]		RI2[1:0]		RI1[1:0]		RI0[1:0]		RW : 00
x,B1h	RDI0SYN	3, 2,					RI3SYN	RI2SYN	RI1SYN	RI0SYN	RW : 00
x,B2h	RDI0IS	3, 2,			BCSEL[1:0]		IS3	IS2	IS1	IS0	RW : 00
x,B3h	RDI0LT0	3, 2,	LUT1[3:0]				LUT0[3:0]				RW : 00
x,B4h	RDI0LT1	3, 2,	LUT3[3:0]				LUT2[3:0]				RW : 00
x,B5h	RDI0RO0	3, 2,	GOO5EN	GOO1EN	GOE5EN	GOE1EN	GOO4EN	GOO0EN	GOE4EN	GOE0EN	RW : 00
x,B6h	RDI0RO1	3, 2,	GOO7EN	GOO3EN	GOE7EN	GOE3EN	GOO6EN	GOO2EN	GOE6EN	GOE2EN	RW : 00
x,B7h	RDI0DSM	3, 2,	AVG_SEL[3:0]				AVG_EN[3:0]				RW : 00
x,B8h	RDI1RI	3, 2,	RI3[1:0]		RI2[1:0]		RI1[1:0]		RI0[1:0]		RW : 00
x,B9h	RDI1SYN	3, 2,					RI3SYN	RI2SYN	RI1SYN	RI0SYN	RW : 00
x,BAh	RDI1IS	3, 2,			BCSEL[1:0]		IS3	IS2	IS1	IS0	RW : 00
x,BBh	RDI1LT0	3, 2,	LUT1[3:0]				LUT0[3:0]				RW : 00
x,BCh	RDI1LT1	3, 2,	LUT3[3:0]				LUT2[3:0]				RW : 00
x,BDh	RDI1RO0	3, 2,	GOO5EN	GOO1EN	GOE5EN	GOE1EN	GOO4EN	GOO0EN	GOE4EN	GOE0EN	RW : 00
x,BEh	RDI1RO1	3, 2,	GOO7EN	GOO3EN	GOE7EN	GOE3EN	GOO6EN	GOO2EN	GOE6EN	GOE2EN	RW : 00
x,BFh	RDI1DSM	3, 2,	AVG_SEL[3:0]				AVG_EN[3:0]				RW : 00
x,C0h	RDI2RI	3	RI3[1:0]		RI2[1:0]		RI1[1:0]		RI0[1:0]		RW : 00
x,C1h	RDI2SYN	3					RI3SYN	RI2SYN	RI1SYN	RI0SYN	RW : 00
x,C2h	RDI2IS	3			BCSEL[1:0]		IS3	IS2	IS1	IS0	RW : 00
x,C3h	RDI2LT0	3	LUT1[3:0]				LUT0[3:0]				RW : 00
x,C4h	RDI2LT1	3	LUT3[3:0]				LUT2[3:0]				RW : 00
x,C5h	RDI2RO0	3	GOO5EN	GOO1EN	GOE5EN	GOE1EN	GOO4EN	GOO0EN	GOE4EN	GOE0EN	RW : 00
x,C6h	RDI2RO1	3	GOO7EN	GOO3EN	GOE7EN	GOE3EN	GOO6EN	GOO2EN	GOE6EN	GOE2EN	RW : 00
x,C7h	RDI2DSM	3	AVG_SEL[3:0]				AVG_EN[3:0]				RW : 00

Summary Table of the Digital Registers *(continued)*

Add.	Name	Digital Rows	Bit 7	Bit 6	Bit 5	Bit 4	Bit 3	Bit 2	Bit 1	Bit 0	Access
DIGITAL BLOCK REGISTERS (page 348)											
Digital Block Data and Control Registers (page 348)											
0,20h	DBC00DR0	3, 2,	Data[7:0]								# : 00
0,21h	DBC00DR1	3, 2,	Data[7:0]								W : 00
0,22h	DBC00DR2	3, 2,	Data[7:0]								# : 00
0,23h	DBC00CR0	3, 2,	Function control/status bits for selected function[6:0]							Enable	# : 00
1,20h	DBC00FN	3, 2,	Data Invert	BCEN	End Single	Mode[1:0]		Function[2:0]			RW : 00
1,21h	DBC00IN	3, 2,	Data Input[3:0]				Clock Input[3:0]				RW : 00
1,22h	DBC00OU	3, 2,	AUXCLK		AUXEN	AUX IO Select[1:0]		OUTEN	Output Select[1:0]		RW : 00
1,23h	DBC00CR1	3, 2,	Function control/status bits for selected function[7:0]								RW : 00
0,24h	DBC01DR0	3, 2,	Data[7:0]								# : 00
0,25h	DBC01DR1	3, 2,	Data[7:0]								W : 00
0,26h	DBC01DR2	3, 2,	Data[7:0]								# : 00
0,27h	DBC01CR0	3, 2,	Function control/status bits for selected function[6:0]							Enable	# : 00
1,24h	DBC01FN	3, 2,	Data Invert	BCEN	End Single	Mode[1:0]		Function[2:0]			RW : 00
1,25h	DBC01IN	3, 2,	Data Input[3:0]				Clock Input[3:0]				RW : 00
1,26h	DBC01OU	3, 2,	AUXCLK		AUXEN	AUX IO Select[1:0]		OUTEN	Output Select[1:0]		RW : 00
1,27h	DBC01CR1	3, 2,	Function control/status bits for selected function[7:0]								RW : 00
0,28h	DCC02DR0	3, 2,	Data[7:0]								# : 00
0,29h	DCC02DR1	3, 2,	Data[7:0]								W : 00
0,2Ah	DCC02DR2	3, 2,	Data[7:0]								# : 00
0,2Bh	DCC02CR0	3, 2,	Function control/status bits for selected function[6:0]							Enable	# : 00
1,28h	DCC02FN	3, 2,	Data Invert	BCEN	End Single	Mode[1:0]		Function[2:0]			RW : 00
1,29h	DCC02IN	3, 2,	Data Input[3:0]				Clock Input[3:0]				RW : 00
1,2Ah	DCC02OU	3, 2,	AUXCLK		AUXEN	AUX IO Select[1:0]		OUTEN	Output Select[1:0]		RW : 00
1,2Bh	DCC02CR1	3, 2,	Function control/status bits for selected function[7:0]								RW : 00
0,2Ch	DCC03DR0	3, 2,	Data[7:0]								# : 00
0,2Dh	DCC03DR1	3, 2,	Data[7:0]								W : 00
0,2Eh	DCC03DR2	3, 2,	Data[7:0]								# : 00
0,2Fh	DCC03CR0	3, 2,	Function control/status bits for selected function[6:0]							Enable	# : 00
1,2Ch	DCC03FN	3, 2,	Data Invert	BCEN	End Single	Mode[1:0]		Function[2:0]			RW : 00
1,2Dh	DCC03IN	3, 2,	Data Input[3:0]				Clock Input[3:0]				RW : 00
1,2Eh	DCC03OU	3, 2,	AUXCLK		AUXEN	AUX IO Select[1:0]		OUTEN	Output Select[1:0]		RW : 00
1,2Fh	DCC03CR1	3, 2,	Function control/status bits for selected function[7:0]								RW : 00
0,30h	DBC10DR0	3, 2,	Data[7:0]								# : 00
0,31h	DBC10DR1	3, 2,	Data[7:0]								W : 00
0,32h	DBC10DR2	3, 2,	Data[7:0]								# : 00
0,33h	DBC10CR0	3, 2,	Function control/status bits for selected function[7:1]							Enable	# : 00
1,30h	DBC10FN	3, 2,	Data Invert	BCEN	End Single	Mode[1:0]		Function[2:0]			RW : 00
1,31h	DBC10IN	3, 2,	Data Input[3:0]				Clock Input[3:0]				RW : 00
1,32h	DBC10OU	3, 2,	AUXCLK		AUXEN	AUX IO Select[1:0]		OUTEN	Output Select[1:0]		RW : 00
1,33h	DBC10CR1	3, 2,	Function control/status bits for selected function[7:0]								RW : 00
0,34h	DBC11DR0	3, 2,	Data[7:0]								# : 00
0,35h	DBC11DR1	3, 2,	Data[7:0]								W : 00
0,36h	DBC11DR2	3, 2,	Data[7:0]								# : 00
0,37h	DBC11CR0	3, 2,	Function control/status bits for selected function[7:1]							Enable	# : 00
1,34h	DBC11FN	3, 2,	Data Invert	BCEN	End Single	Mode[1:0]		Function[2:0]			RW : 00
1,35h	DBC11IN	3, 2,	Data Input[3:0]				Clock Input[3:0]				RW : 00
1,36h	DBC11OU	3, 2,	AUXCLK		AUXEN	AUX IO Select[1:0]		OUTEN	Output Select[1:0]		RW : 00
1,37h	DBC11CR1	3, 2,	Function control/status bits for selected function[7:0]								RW : 00

Summary Table of the Digital Registers *(continued)*

Add.	Name	Digital Rows	Bit 7	Bit 6	Bit 5	Bit 4	Bit 3	Bit 2	Bit 1	Bit 0	Access
0,38h	DCC12DR0	3, 2,	Data[7:0]								# : 00
0,39h	DCC12DR1	3, 2,	Data[7:0]								W : 00
0,3Ah	DCC12DR2	3, 2,	Data[7:0]								# : 00
0,3Bh	DCC12CR0	3, 2,	Function control/status bits for selected function[7:1]							Enable	# : 00
1,38h	DCC12FN	3, 2,	Data Invert	BCEN	End Single	Mode[1:0]		Function[2:0]			RW : 00
1,39h	DCC12IN	3, 2,	Data Input[3:0]				Clock Input[3:0]				RW : 00
1,3Ah	DCC12OU	3, 2,	AUXCLK		AUXEN	AUX IO Select[1:0]		OUTEN	Output Select[1:0]		RW : 00
1,3Bh	DCC12CR1	3, 2,	Function control/status bits for selected function[7:0]								RW : 00
0,3Ch	DCC13DR0	3, 2,	Data[7:0]								# : 00
0,3Dh	DCC13DR1	3, 2,	Data[7:0]								W : 00
0,3Eh	DCC13DR2	3, 2,	Data[7:0]								# : 00
0,3Fh	DCC13CR0	3, 2,	Function control/status bits for selected function[7:1]							Enable	# : 00
1,3Ch	DCC13FN	3, 2,	Data Invert	BCEN	End Single	Mode[1:0]		Function[2:0]			RW : 00
1,3Dh	DCC13IN	3, 2,	Data Input[3:0]				Clock Input[3:0]				RW : 00
1,3Eh	DCC13OU	3, 2,	AUXCLK		AUXEN	AUX IO Select[1:0]		OUTEN	Output Select[1:0]		RW : 00
1,3Fh	DCC13CR1	3, 2,	Function control/status bits for selected function[7:0]								RW : 00
0,40h	DBC20DR0	3	Data[7:0]								# : 00
0,41h	DBC20DR1	3	Data[7:0]								W : 00
0,42h	DBC20DR2	3	Data[7:0]								# : 00
0,43h	DBC20CR0	3	Function control/status bits for selected function[7:1]							Enable	# : 00
1,40h	DBC20FN	3	Data Invert	BCEN	End Single	Mode[1:0]		Function[2:0]			RW : 00
1,41h	DBC20IN	3	Data Input[3:0]				Clock Input[3:0]				RW : 00
1,42h	DBC20OU	3	AUXCLK		AUXEN	AUX IO Select[1:0]		OUTEN	Output Select[1:0]		RW : 00
1,43h	DBC20CR1	3	Function control/status bits for selected function[7:0]								RW : 00
0,44h	DBC21DR0	3	Data[7:0]								# : 00
0,45h	DBC21DR1	3	Data[7:0]								W : 00
0,46h	DBC21DR2	3	Data[7:0]								# : 00
0,47h	DBC21CR0	3	Function control/status bits for selected function[7:1]							Enable	# : 00
1,44h	DBC21FN	3	Data Invert	BCEN	End Single	Mode[1:0]		Function[2:0]			RW : 00
1,45h	DBC21IN	3	Data Input[3:0]				Clock Input[3:0]				RW : 00
1,46h	DBC21OU	3	AUXCLK		AUXEN	AUX IO Select[1:0]		OUTEN	Output Select[1:0]		RW : 00
1,47h	DBC21CR1	3	Function control/status bits for selected function[7:0]								RW : 00
0,48h	DCC22DR0	3	Data[7:0]								# : 00
0,49h	DCC22DR1	3	Data[7:0]								W : 00
0,4Ah	DCC22DR2	3	Data[7:0]								# : 00
0,4Bh	DCC22CR0	3	Function control/status bits for selected function[7:1]							Enable	# : 00
1,48h	DCC22FN	3	Data Invert	BCEN	End Single	Mode[1:0]		Function[2:0]			RW : 00
1,49h	DCC22IN	3	Data Input[3:0]				Clock Input[3:0]				RW : 00
1,4Ah	DCC22OU	3	AUXCLK		AUXEN	AUX IO Select[1:0]		OUTEN	Output Select[1:0]		RW : 00
1,4Bh	DCC22CR1	3	Function control/status bits for selected function[7:0]								RW : 00
0,4Ch	DCC23DR0	3	Data[7:0]								# : 00
0,4Dh	DCC23DR1	3	Data[7:0]								W : 00
0,4Eh	DCC23DR2	3	Data[7:0]								# : 00
0,4Fh	DCC23CR0	3	Function control/status bits for selected function[7:1]							Enable	# : 00
1,4Ch	DCC23FN	3	Data Invert	BCEN	End Single	Mode[1:0]		Function[2:0]			RW : 00
1,4Dh	DCC23IN	3	Data Input[3:0]				Clock Input[3:0]				RW : 00
1,4Eh	DCC23OU	3	AUXCLK		AUXEN	AUX IO Select[1:0]		OUTEN	Output Select[1:0]		RW : 00
1,4Fh	DCC23CR1	3	Function control/status bits for selected function[7:0]								RW : 00
Digital Block Interrupt Mask Registers (page 359)											
0,DEh	INT_MSK3		ENSWINT		Analog 5	Analog 4	RTC	SARADC	I2C1	I2C0	RW : 00

Summary Table of the Digital Registers *(continued)*

Add.	Name	Digital Rows	Bit 7	Bit 6	Bit 5	Bit 4	Bit 3	Bit 2	Bit 1	Bit 0	Access
0,DFh	INT_MSK2	3					DCC23	DCC22	DBC21	DBC20	RW : 00
0,E0h	INT_MSK0		VC3	Sleep	GPIO	Analog 3	Analog 2	Analog 1	Analog 0	V Monitor	RW : 00
			VC3	Sleep	GPIO			Analog 1	Analog 0	V Monitor	
0,E1h	INT_MSK1	3, 2	DCC13	DCC12	DBC11	DBC10	DCC03	DCC02	DBC01	DBC00	RW : 00

LEGEND
x An 'x' before the comma in the address field indicates that this register can be read or written to no matter what bank is used. R: Read register or bit(s).
Access is bit specific. Refer to the Register Details chapter on page 125 for additional information.
R Read register or bit(s).
W Write register or bit(s).

14. Global Digital Interconnect (GDI)

This chapter discusses the Global Digital Interconnect (GDI) and its associated registers. All PSoC® CY8C28xxx devices have the exact same global digital interconnect options, varying only in the number of 8-bit ports connected to the globals. For a complete table of the GDI registers, refer to the "Summary Table of the Digital Registers" on page 312. For a quick reference of all PSoC registers in address order, refer to the Register Details chapter on page 125.

14.1 Architectural Description

Global Digital Interconnect (GDI) consists of four 8-bit buses (refer to the figures that follow). Two of the buses are input buses, which allow signals to pass from the device pins to the core of the PSoC device. These buses are called Global Input Odd (GIO[7:0]) and Global Input Even (GIE[7:0]). The other two buses are output buses that allow signals to pass from the core of the PSoC device to the device pins. They are called Global Output Odd (GOO[7:0]) and Global Output Even (GOE[7:0]). The word "odd" or "even" in the bus name indicates which device ports the bus connects to. Buses with odd in their name connect to all odd numbered ports. Buses with even in their name connect to all even numbered ports.

There are two ends to the global digital interconnect core signals and port pins. An end may be configured as a source or a destination. For example, a GPIO pin may be configured to drive a global input or receive a global output and drive it to the package pin. Globals cannot "loop through" a GPIO. Currently, there are two types of core signals connected to the global buses. The digital blocks, which may be a source or a destination for a global ***net***, and system clocks, which may only drive global nets.

Many of the digital clocks may also be driven on to the global bus to allow the clocks to route directly to I/O pins. This is shown in the global interconnect block diagrams on the following pages. For more information on this feature, see the Digital Clocks chapter on page 465.

Each global input and global output has a ***keeper*** on it. The keeper sets the value of the global to '1' on system reset and holds the last driven value of the global should it stop being driven.

The primary goal, of the architectural block diagrams that follow, is to communicate the relationship between global buses (GOE, GOO, GIE, GIO) and pins. Note that any global input may be connected to its corresponding global output, using the tri-state buffers located in the corners of the figures. Also, global outputs may be shorted to global inputs using these tri-state buffers. The rectangle in the center of the figure represents the array of digital PSoC blocks.

14.1.1 20-Pin Global Interconnect

To determine the number of digital rows and digital blocks in your PSoC device, refer to the table titled “PSoC Device Characteristics” on page 311.

Figure 14-1. Global Interconnect Block Diagram for the CY8C28243 20-Pin Package

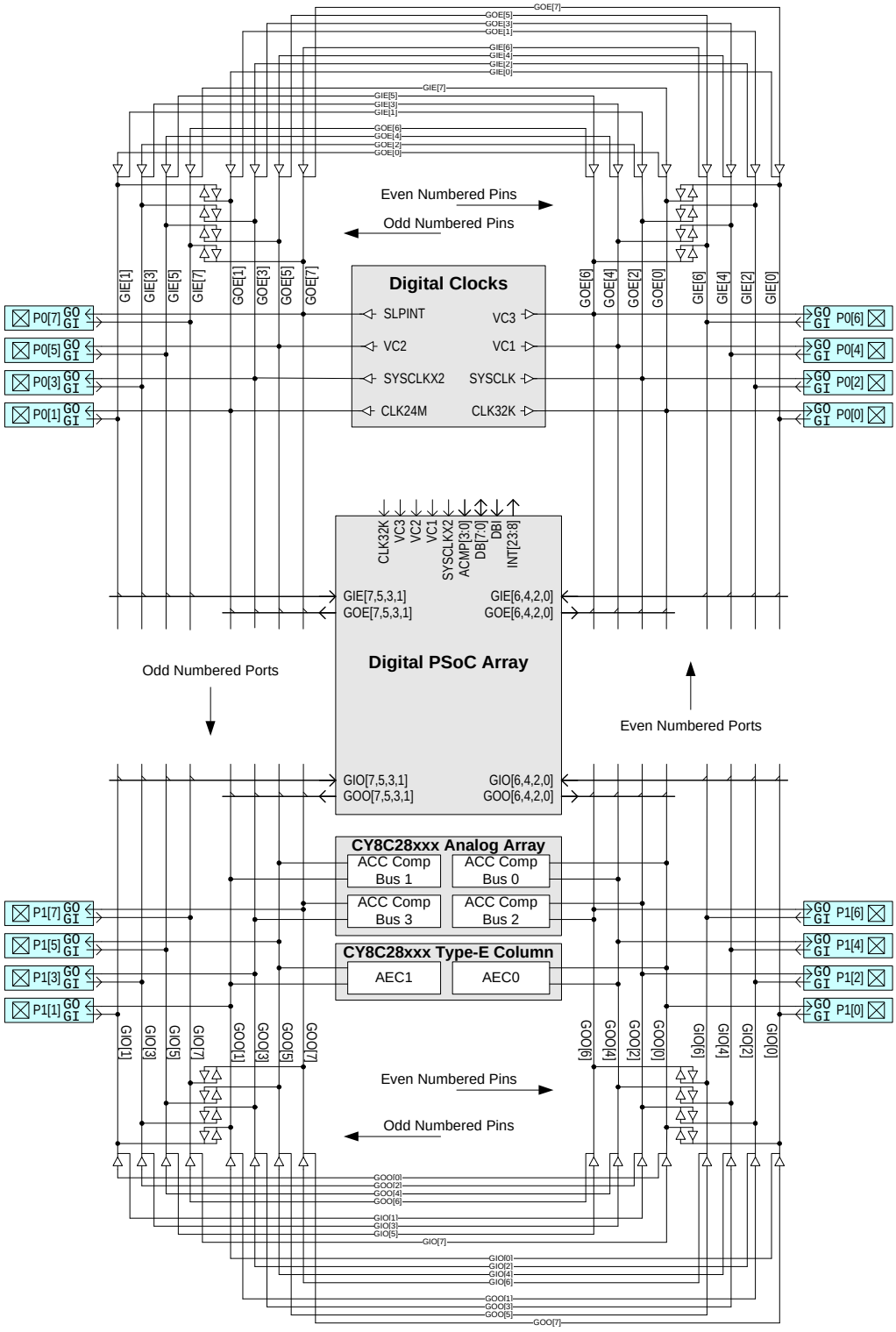

14.1.2 28-Pin Global Interconnect

For 28-pin PSoC devices, there are three 8-bit ports. Therefore, there are two ports connected to the even global buses and one port connected to the odd global buses. Table 14-1 lists the mapping between global buses and ports.

Table 14-1. 28-Pin Global Bus to Port Mapping

Global Bus	Ports
GIO[7:0], GOO[7:0]	P1
GIE[7:0], GOE[7:0]	P0, P2

Because up to two ports are connected to a single global bus, there is a one-to-many mapping between individual nets in a global bus and port pins. For example, if GIE[1] is used to bring an input signal into a digital PSoC block, either pin P0[1] or P2[1] may be used. The same is true for the outputs. For example, if GOE[3] is used to carry a signal from a digital PSoC block to a port pin, either or both of the following pins may be used: P0[3] or P2[3]. Only Port 1 pins connect to the GIO/GOO globals in these 28-pin PSoC devices.

To determine the number of digital rows and digital blocks in your PSoC device, refer to the table titled “PSoC Device Characteristics” on page 311.

Figure 14-2. Global Interconnect Block Diagram for the CY8C284xx 28-Pin Package

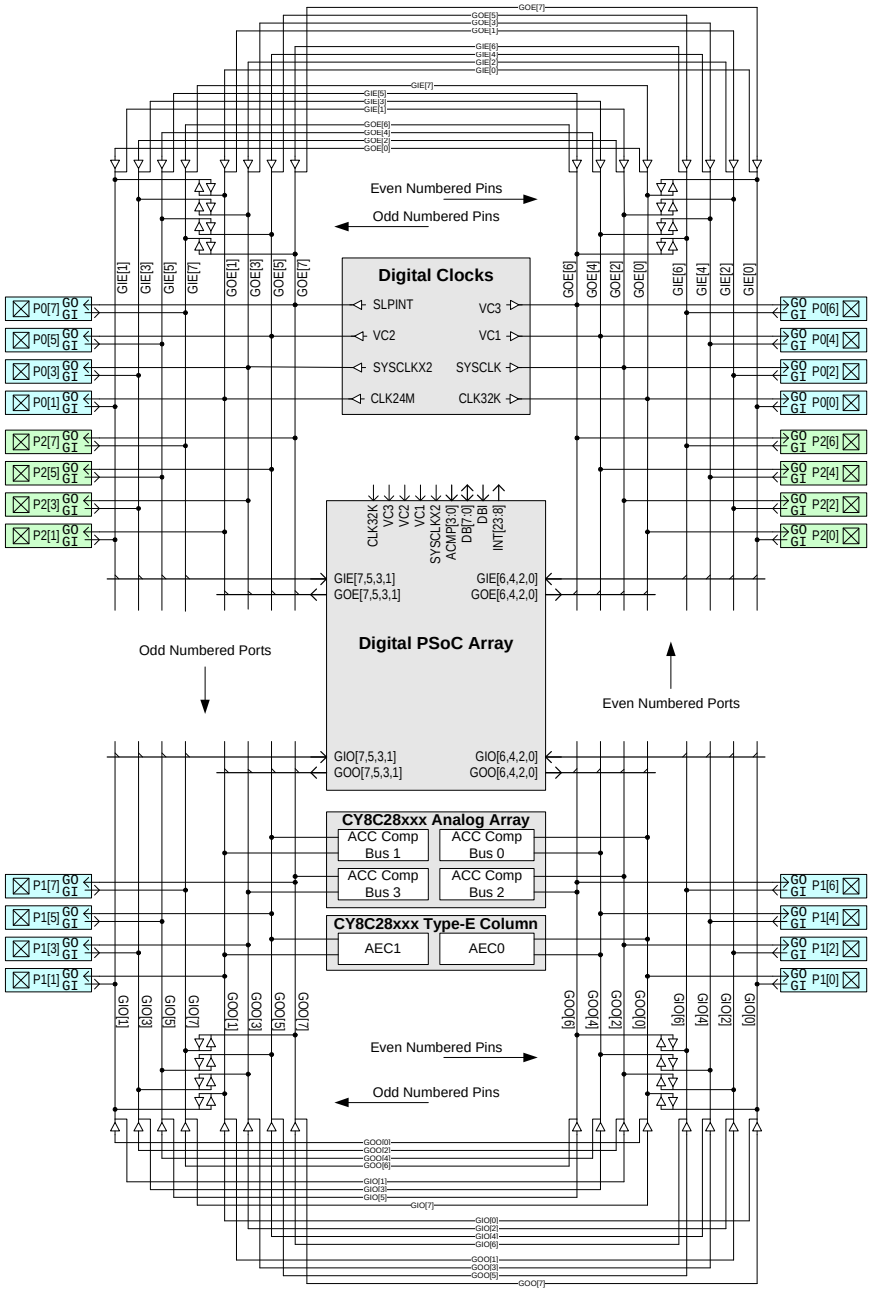

14.1.3 44-Pin Global Interconnect

For 44-pin PSoC devices, there are five 8-bit ports. Therefore, there are up to three ports connected to the even global buses and two ports connected to the odd global buses. Table 14-2 lists the mapping between global buses and ports.

Table 14-2. 44-Pin Global Bus to Port Mapping

Global Bus	Ports
GIO[7:0], GOO[7:0]	P1, P3
GIE[7:0], GOE[7:0]	P0, P2, P4

Because several ports are connected to a single global bus, there is a one-to-many mapping between individual nets in a global bus and port pins. For example, if GIO[1] is used to bring an input signal into a digital PSoC block, either pin P1[1] or P3[1] may be used. The same is true for the outputs. For example, if GOE[3] is used to carry a signal from a digital PSoC block to a port pin, any or all of the following pins may be used: P0[3], P2[3], or P4[3].

To determine the number of digital rows and digital blocks in your PSoC device, refer to the table titled "PSoC Device Characteristics" on page 311.

Figure 14-3. Global Interconnect Block Diagram for the CY8C285xx 44-Pin Package

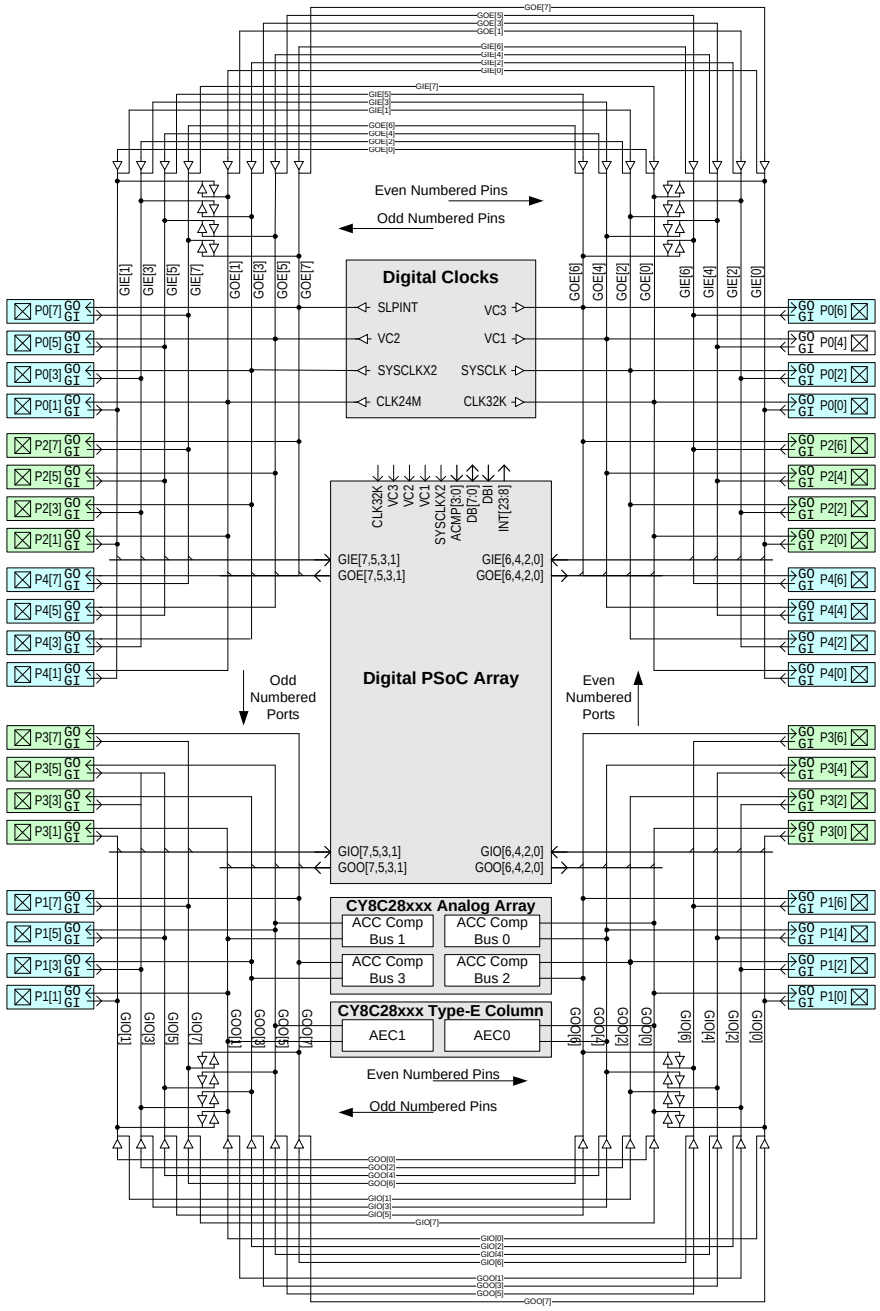

14.1.4 48-Pin Global Interconnect

To determine the number of digital rows and digital blocks in your PSoC device, refer to the table titled “PSoC Device Characteristics” on page 311.

Figure 14-4. Global Interconnect Block Diagram for the CY8C286xx 48-Pin Package

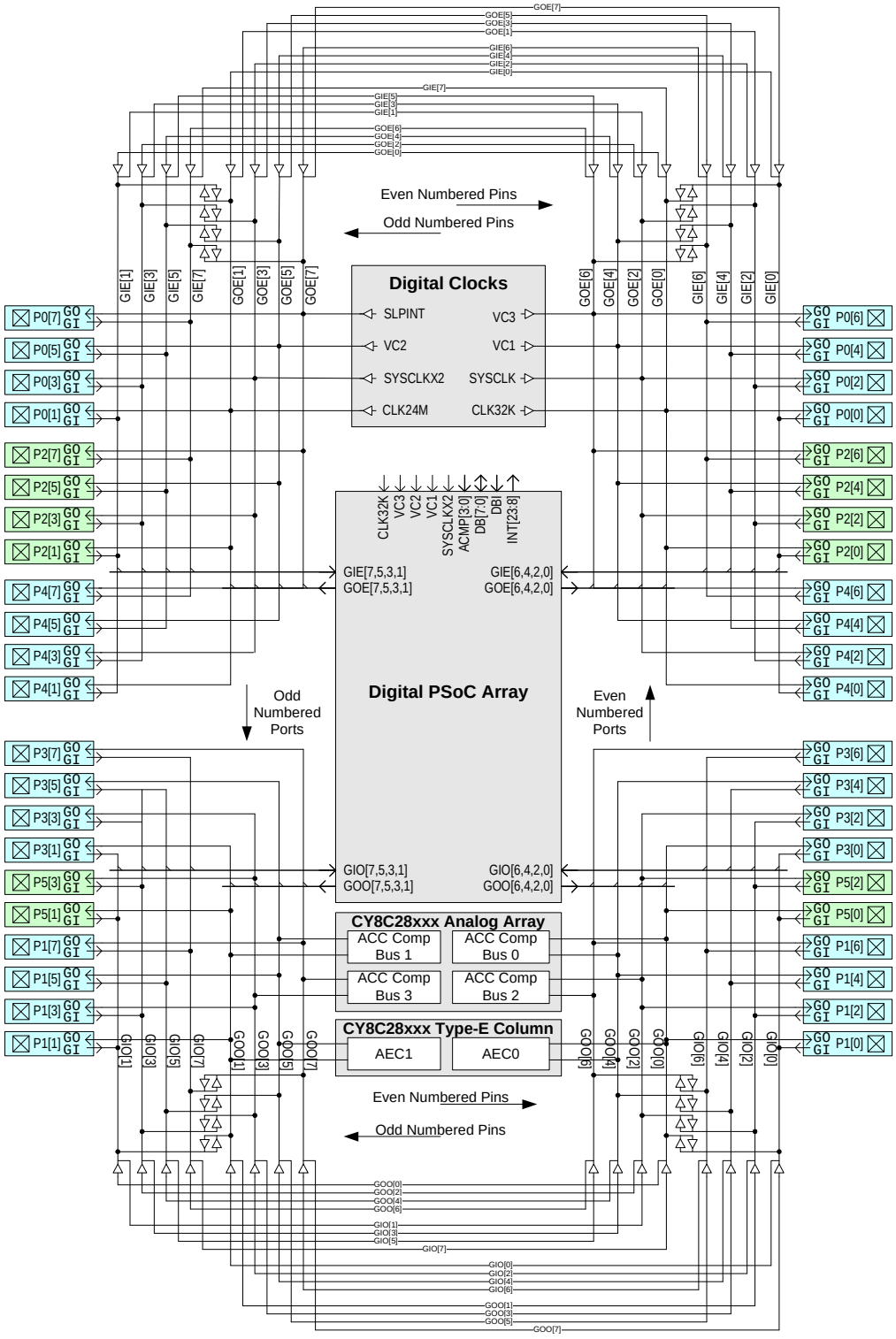

14.1.5 56-Pin Global Interconnect

The CY8C28xxx 56-pin PSoC device is only for OCD purposes. Therefore the 56-pin global connection is the same as the CY8C28xxx 44-pin package.

14.2 Register Definitions

The following registers are associated with the Global Digital Interconnect and are listed in address order. Each register description has an associated register table showing the bit structure for that register. For a complete table of GDI registers, refer to the "Summary Table of the Digital Registers" on page 312.

In the PSoC device with two digital rows, the configurable GDI is used to resynchronize the ***feedback*** between two digital PSoC blocks. This is accomplished by connecting a digital PSoC block's output to a global output that has been configured to drive its corresponding global input. The global input is chosen to drive one of the row inputs. The row input is configured to synchronize the signal to the device's 24 MHz system clock. Finally, the row input is used by the second digital PSoC block.

14.2.1 GDI_x_IN Registers/GDI_x_IN_CR Registers

GDI_x_IN										
Add.	**Name**	**Bit 7**	**Bit 6**	**Bit 5**	**Bit 4**	**Bit 3**	**Bit 2**	**Bit 1**	**Bit 0**	**Access**
1,D0h	GDI_O_IN	GIONOUT7	GIONOUT6	GIONOUT5	GIONOUT4	GIONOUT3	GIONOUT2	GIONOUT1	GIONOUT0	RW : 00
1,D1h	GDI_E_IN	GIENOUT7	GIENOUT6	GIENOUT5	GIENOUT4	GIENOUT3	GIENOUT2	GIENOUT1	GIENOUT0	RW : 00
GDI_x_IN_CR										
Add.	**Name**	**Bit 7**	**Bit 6**	**Bit 5**	**Bit 4**	**Bit 3**	**Bit 2**	**Bit 1**	**Bit 0**	**Access**
1,A0h	GDI_O_IN_CR	GDIOICR7	GDIOICR6	GDIOICR5	GDIOICR4	GDIOICR3	GDIOICR2	GDIOICR1	GDIOICR0	RW : 00
1,A1h	GDI_E_IN_CR	GDIEICR7	GDIEICR6	GDIEICR5	GDIEICR4	GDIEICR3	GDIEICR2	GDIEICR1	GDIEICR0	RW : 00

The Global Digital Interconnect Odd and Even Input Registers (GDI_x_IN/GDI_x_IN_CR) are used to configure a global input to drive a global output.

The PSoC device has a configurable Global Digital Interconnect (GDI). Note that the GDI_x_IN and GDI_x_OU registers should never have the same bits connected. This results in multiple drivers of one bus.

Bits 7 to 0: GIxNOUTx. Using the configuration bits in the GDI_x_IN registers, a global input net may be configured to drive its corresponding global output net. For example,

$$GIE[7] \rightarrow GOE[7]$$

The configurability of the GDI does not allow odd and even nets to be connected; however, connections from N to N+1 are allowed, and decided by GDI_x_IN_CR. The following are examples of connections that are not possible in the PSoC devices.

$$GOE[7] \not\rightarrow GIO[7]$$
$$GOE[0] \not\rightarrow GIE[7]$$

There are a total of 16 bits that control the ability of global inputs to drive global outputs. These bits are in the GDI_x_IN registers. Table 14-3 enumerates the meaning of each bit position in either of the GDI_O_IN or GDI_E_IN registers.

Table 14-3. GDI_x_IN Register

GDI_x_IN[0]	0: No connection between GIx[0]/GIx[7] to GOx[0] 1: Allow GIx[0]/GIx[7] to drive GOx[0]
GDI_x_IN[1]	0: No connection between GIx[1]/GIx[0] to GOx[1] 1: Allow GIx[1]/GIx[0] to drive GOx[1]
GDI_x_IN[2]	0: No connection between GIx[2]/GIx[1] to GOx[2] 1: Allow GIx[2]/GIx[1] to drive GOx[2]
GDI_x_IN[3]	0: No connection between GIx[3]/GIx[2] to GOx[3] 1: Allow GIx[3]/GIx[2] to drive GOx[3]
GDI_x_IN[4]	0: No connection between GIx[4]/GIx[3] to GOx[4] 1: Allow GIx[4]/GIx[3] to drive GOx[4]
GDI_x_IN[5]	0: No connection between GIx[5]/GIx[4] to GOx[5] 1: Allow GIx[5]/GIx[4] to drive GOx[5]
GDI_x_IN[6]	0: No connection between GIx[6]/GIx[5] to GOx[6] 1: Allow GIx[6]/GIx[5] to drive GOx[6]
GDI_x_IN[7]	0: No connection between GIx[7]/GIx[6] to GOx[7] 1: Allow GIx[7]/GIx[6] to drive GOx[7]

For additional information, refer to the GDI_O_IN register on page 286 and the GDI_E_IN register on page 287.

Bits 7 to 0: GDIxICRx. Using the configuration bits in the GDI_x_IN_CR registers, a global input net may be configured to drive its corresponding *next* global output net. For example,

$$GIE[7] \rightarrow GOE[0]$$

Therefore it is possible to drive two global nets with same data source, or shift data to other global nets (see Section 14.2.2). For example,

$$GIE[7] \rightarrow GOE[0]$$
$$GIE[7] \rightarrow GOE[7]$$
$$GIO[0] \rightarrow GOO[1] \rightarrow GIO[2]$$

There are a total of 16 bits that control the data source of global inputs to drive global outputs. These bits are in the GDI_x_IN_CR registers. Table 14-4 enumerates the meaning of each bit position in either of the GDI_O_IN_CR or GDI_E_IN_CR registers.

Table 14-4. GDI_x_IN_CR Register

GDI_xICR[0]	0: Data source is GIx[0] 1: Data source is GIx[7]
GDI_xICR[1]	0: Data source is GIx[1] 1: Data source is GIx[0]
GDI_xICR[2]	0: Data source is GIx[2] 1: Data source is GIx[1]
GDI_xICR[3]	0: Data source is GIx[3] 1: Data source is GIx[2]
GDI_xICR[4]	0: Data source is GIx[4] 1: Data source is GIx[3]
GDI_xICR[5]	0: Data source is GIx[5] 1: Data source is GIx[4]
GDI_xICR[6]	0: Data source is GIx[6] 1: Data source is GIx[5]
GDI_xICR[7]	0: Data source is GIx[7] 1: Data source is GIx[6]

For additional information, refer to the GDI_O_IN_CR register on page 271 and the GDI_E_IN_CR register on page 272.

14.2.2 GDI_x_OU/GDI_x_OU_CR Registers

GDI_x_OU										
Add.	**Name**	**Bit 7**	**Bit 6**	**Bit 5**	**Bit 4**	**Bit 3**	**Bit 2**	**Bit 1**	**Bit 0**	**Access**
1,D2h	GDI_O_OU	GOOUTIN7	GOOUTIN6	GOOUTIN5	GOOUTIN4	GOOUTIN3	GOOUTIN2	GOOUTIN1	GOOUTIN0	RW : 00
1,D3h	GDI_E_OU	GOEUTIN7	GOEUTIN6	GOEUTIN5	GOEUTIN4	GOEUTIN3	GOEUTIN2	GOEUTIN1	GOEUTIN0	RW : 00
GDI_x_OU_CR										
Add.	**Name**	**Bit 7**	**Bit 6**	**Bit 5**	**Bit 4**	**Bit 3**	**Bit 2**	**Bit 1**	**Bit 0**	**Access**
1,A2h	GDI_O_OU_CR	GDIOOCR7	GDIOOCR6	GDIOOCR5	GDIOOCR4	GDIOOCR3	GDIOOCR2	GDIOOCR1	GDIOOCR0	RW : 00
1,A3h	GDI_E_OU_CR	GDIEOCR7	GDIEOCR6	GDIEOCR5	GDIEOCR4	GDIEOCR3	GDIEOCR2	GDIEOCR1	GDIEOCR0	RW : 00

The Global Digital Interconnect Odd and Even Output Registers (GDI_x_OU/GDI_x_OU_CR) are used to configure a global output to drive a global input.

The PSoC device has a configurable Global Digital Interconnect (GDI). Note that the GDI_x_IN and GDI_x_OU registers should never have the same bits connected. This results in multiple drivers of one bus.

Bits 7 to 0: GOxUTINx. Using the configuration bits in the GDI_x_OU registers, a global output net may be configured to drive its corresponding global input. For example,

$$GOE[7] \rightarrow GIE[7]$$

The configurability of the GDI does not allow odd and even nets or nets with different indexes to be connected; however, connections from N to N+1 are allowed, and decided by GDI_x_IN_CR. The following are examples of connections that are not possible in the PSoC devices.

$$GOE[7] \not\rightarrow GIO[7]$$
$$GOE[0] \not\rightarrow GIE[7]$$

There are a total of 16 bits that control the ability of global outputs to drive global inputs. These bits are in the GDI_x_OU registers. Table 14-5 enumerates the meaning of each bit position in either of the GDI_O_OU or GDI_E_OU registers.

Table 14-5. GDI_x_OU Register

GDI_x_OU[0]	0: No connection between GOx[0]/GOx[7] to GIx[0] 1: Allow GOx[0]/GOx[7] to drive GIx[0]
GDI_x_OU[1]	0: No connection between GOx[1]/GOx[0] to GIx[1] 1: Allow GOx[1]/GOx[0] to drive GIx[1]
GDI_x_OU[2]	0: No connection between GOx[2]/GOx[1] to GIx[2] 1: Allow GOx[2]/GOx[1] to drive GIx[2]
GDI_x_OU[3]	0: No connection between GOx[3]/GOx[2] to GIx[3] 1: Allow GOx[3]/GOx[2] to drive GIx[3]
GDI_x_OU[4]	0: No connection between GOx[4]/GOx[3] to GIx[4] 1: Allow GOx[4]/GOx[3] to drive GIx[4]
GDI_x_OU[5]	0: No connection between GOx[0]/GOx[4] to GIx[5] 1: Allow GOx[5]/GOx[4] to drive GIx[5]
GDI_x_OU[6]	0: No connection between GOx[6]/GOx[5] to GIx[6] 1: Allow GOx[6]/GOx[5] to drive GIx[6]
GDI_x_OU[7]	0: No connection between GOx[7]/GOx[6] to GIx[7] 1: Allow GOx[7]/GOx[6] to drive GIx[7]

For additional information, refer to the GDI_O_OU register on page 288 and the GDI_E_OU register on page 289.

Bits 7 to 0: GDIxOCRx. Using the configuration bits in the CY8C28xxx GDI_x_OU_CR registers, a global output net may be configured to drive its corresponding *next* global input. For example,

$$GOE[7] \rightarrow GIE[0]$$

Therefore it is possible to drive two global nets with same data source, or shift data to other global nets (see Section 14.2.1). For example,

$$GOE[4] \rightarrow GIE[4]$$
$$GOE[4] \rightarrow GIE[5]$$
$$GOO[3] \rightarrow GIO[4] \rightarrow GOO[5]$$

There are a total of 16 bits that control the ability of global outputs to drive global inputs. These bits are in the GDI_x_OU_CR registers. Table 14-6 enumerates the meaning of each bit position in either of the GDI_O_OU_CR or GDI_E_OU_CR registers.

Table 14-6. GDI_x_OU_CR Register

GDIxOCR[0]	0: Data source is GOx[0] 1: Data source is GOx[7]
GDIxOCR[1]	0: Data source is GOx[1] 1: Data source is GOx[0]
GDIxOCR[2]	0: Data source is GOx[2] 1: Data source is GOx[1]
GDIxOCR[3]	0: Data source is GOx[3] 1: Data source is GOx[2]
GDIxOCR[4]	0: Data source is GOx[4] 1: Data source is GOx[3]
GDIxOCR[5]	0: Data source is GOx[5] 1: Data source is GOx[4]
GDIxOCR[6]	0: Data source is GOx[6] 1: Data source is GOx[5]
GDIxOCR[7]	0: Data source is GOx[7] 1: Data source is GOx[6]

For additional information, refer to the GDI_O_OU_CR register on page 273 and the GDI_E_OU_CR register on page 274.

15. Array Digital Interconnect (ADI)

This chapter presents the Array Digital Interconnect (ADI). The digital PSoC® array uses a scalable architecture that is designed to support from one to four digital PSoC rows, as defined in the Row Digital Interconnect (RDI) chapter on page 327. The digital PSoC array does not have any configurable interconnect; therefore, there are no associated registers in this chapter.

15.1 Architectural Description

The Array Digital Interconnect (ADI) is shown in Figure 15-1. The array structure varies depending on the number of digital rows your PSoC device has (see the table titled "PSoC Device Characteristics" on page 311). The ADI is not configurable; therefore, the information in this chapter is provided to improve the reader's understanding of the structure.

Figure 15-1. Digital PSoC Block Array Structure

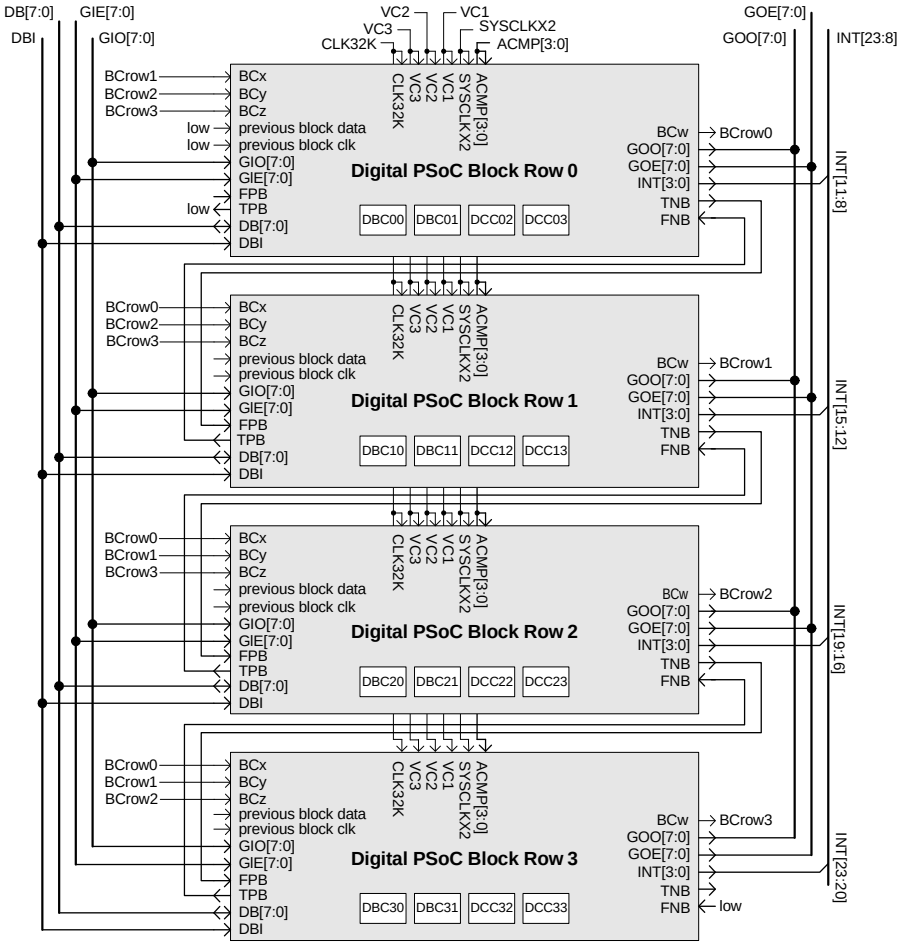

In Figure 15-1, the detailed view of a Digital PSoC block row has been replaced by a box labeled digital PSoC block row x. The rest of this figure illustrates how all rows are connected to the same globals, clocks, and so on. The figure also illustrates how the broadcast clock nets (BCrowx) are connected between rows.

The different PSoC CY8C28xxx devices have varying numbers of digital PSoC blocks in the digital array. These blocks are arranged into rows and the ADI provides a regular interconnect architecture between the Global Digital Interconnect (GDI) and the Row Digital Interconnect (RDI), regardless of the number of rows available in a particular device. The most important aspect of the ADI and the digital PSoC rows is that all digital PSoC rows have the same connections to global inputs and outputs. The connections that make a row's position unique are explained as follows.

- **Register Address**: Rows and the blocks within them need to have unique register addresses.
- **Interrupt Priority**: Each digital PSoC block has its own interrupt priority and vector. A row's position in the array determines the relative priority of the digital PSoC blocks within the row. The lower the row number, the higher the interrupt priority, and the lower the interrupt vector address.
- **Broadcast**: Each digital PSoC row has an internal ***broadcast net*** that may be either driven internally, by one of the four digital PSoC blocks, or driven externally. In the case where the broadcast net is driven externally, the source may be any one of the other rows in the array. Therefore, depending on the row's position in the array, it will have different options for driving its broadcast net.
- **Chaining Position**: Rows in the array form a string of digital blocks equal in length to the number of rows multiplied by four. The first block in the first row and the last block in the last row are not connected; therefore, the array does not form a loop. The first row in the array has its previous ***chaining*** inputs tied low. If there is a second row in the array, the next chaining outputs are connected to the next row. For the last row in the array, the next inputs are tied low.

16. Row Digital Interconnect (RDI)

This chapter explains the Row Digital Interconnect (RDI) and its associated registers. This chapter discusses a single digital PSoC® block row. It does not discuss the functions, inputs, or outputs for individual digital PSoC blocks; nor does it cover specific instances of multiple rows in a single part. Therefore, the information contained here is valid for 3 and 2 row configurations. Information about individual digital PSoC blocks is covered in the Digital Blocks chapter on page 335. For a complete table of the RDI registers, refer to the "Summary Table of the Digital Registers" on page 312. For a quick reference of all PSoC registers in address order, refer to the Register Details chapter on page 125.

16.1 Architectural Description

Many signals pass through the digital PSoC block row on their way to or from individual ***digital blocks***. However, only a small number of signals pass though configurable circuits on their way to and from digital blocks. The configurable circuits allow for greater flexibility in the connections between digital blocks and global buses. What follows is a discussion of the signals that are configurable by way of the registers listed in the "Register Definitions" on page 329.

In Figure 16-1, within a digital PSoC block row, there are four digital PSoC Blocks. The first two blocks are of the type basic (DBC). The second two are of the type communication (DCC). This figure shows the connections between digital blocks within a row. Only the signals that pass outside the gray background box in Figure 16-1 are shown at the next level of hierarchy in Figure 16-2.

In Figure 16-2, the detailed view shown in Figure 16-1 of the four PSoC block grouping, has been replaced by the box in the center of the figure labeled "4 PSoC Block Grouping." The rest of the configurable nature of the Row Inputs (RI), Row Outputs (RO), and Broadcast clock net (BC) is shown for the next level of hierarchy.

Figure 16-1. Detailed View of Four PSoC Block Grouping

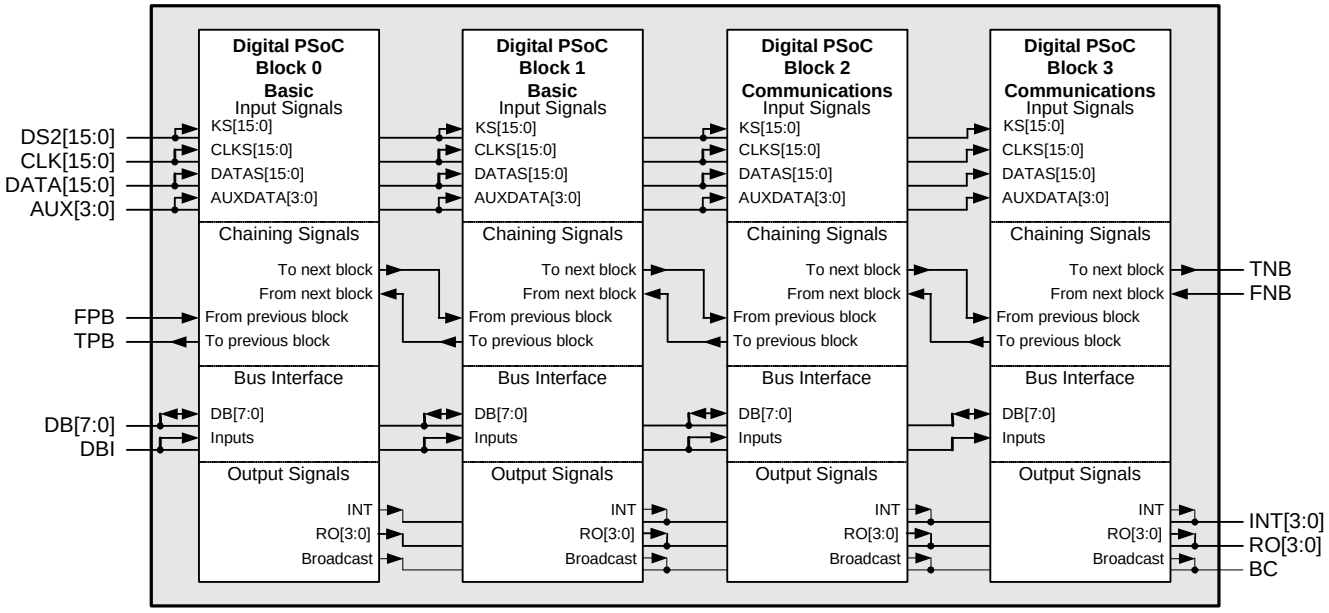

As shown in Figure 16-2, there is a ***keeper*** connected to the row ***broadcast net*** and each of the row outputs. The keeper sets the value of these nets to '1' on system reset and holds the value of the net should it stop being driven.

Notice on the left side of Figure 16-2 that global inputs (GIE[n] and GIO[n]) are inputs to 4-to-1 multiplexers. The output of these muxes are Row Inputs (RI[x]). Because there are four 4-to-1 muxes, each with a unique set of inputs, a row has access to every global input line in a PSoC device.

Figure 16-2. Digital PSoC Block Row Structure

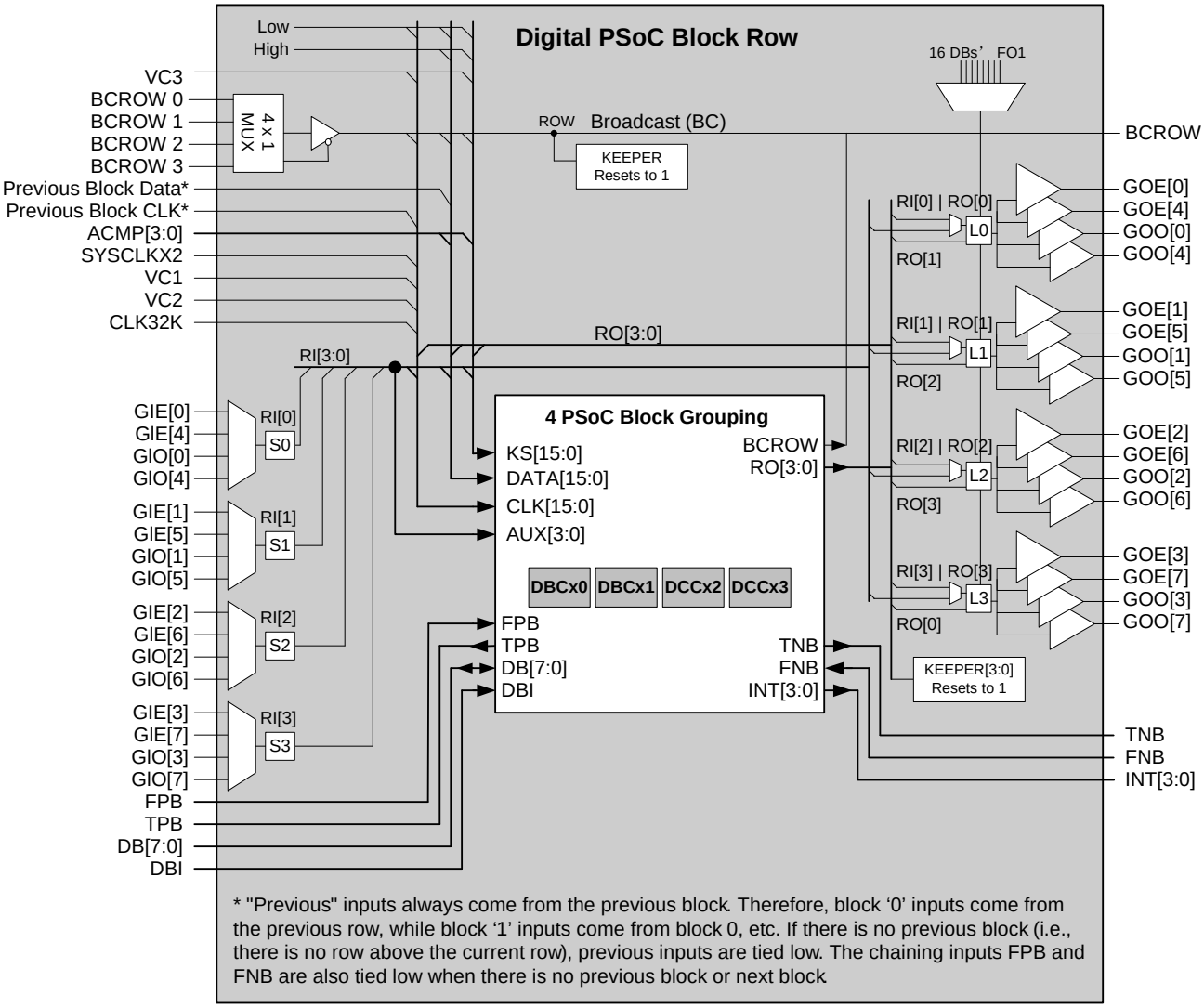

16.2 Register Definitions

The following registers are associated with the Row Digital Interconnect (RDI) and are listed in address order. Each register description has an associated register table showing the bit structure for that register. For a complete table of RDI registers, refer to the “Summary Table of the Digital Registers” on page 312.

Depending on how many digital rows your PSoC device has (see the Rows column in the register tables below and refer to the table titled “PSoC Device Characteristics” on page 311), only certain bits are accessible to be read or written. The bits that are grayed out throughout this manual are reserved bits and are not detailed in the register descriptions that follow. Reserved bits should always be written with a value of ‘0’.

The only configurable inputs to a digital PSoC block row are the Global Input Even and Global Input Odd 8-bit buses. The only configurable outputs from the digital PSoC block row are the Global Output Even and Global Output Odd 8-bit buses. Figure 16-2 on page 328 illustrates the relationships between global signals and row signals.

16.2.1 RDIxRI Register

Add.	Name	Rows	Bit 7	Bit 6	Bit 5	Bit 4	Bit 3	Bit 2	Bit 1	Bit 0	Access
x,B0h	RDI0RI	3, 2	RI3[1:0]		RI2[1:0]		RI1[1:0]		RI0[1:0]		RW : 00
x,B8h	RDI1RI	3, 2	RI3[1:0]		RI2[1:0]		RI1[1:0]		RI0[1:0]		RW : 00
x,C0h	RDI2RI	3	RI3[1:0]		RI2[1:0]		RI1[1:0]		RI0[1:0]		RW : 00

LEGEND
x An “x” before the comma in the address field indicates that the register exists in both register banks.

The Row Digital Interconnect Row Input Register (RDIxRI) is used to control the input mux that determines which global inputs will drive the row inputs.

The RDIxRI Register and the RDIxSYN Register are the only two registers that affect digital PSoC row input signals. All other registers are related to output signal configuration.

The RDIxRI register has select bits that are used to control four muxes, where “x” denotes a place holder for the row index. Table 16-1 lists the meaning for each mux’s four possible settings.

Bits 7 and 6: RI3[1:0]. These bits control the input mux for row 3.

Bits 5 and 4: RI2[1:0]. These bits control the input mux for row 2.

Bits 3 and 2: RI1[1:0]. These bits control the input mux for row 1.

Bits 1 and 0: RI0[1:0]. These bits control the input mux for row 0.

Table 16-1. RDIxRI Register

RI3[1:0]	00b: GIE[3] 01b: GIE[7] 10b: GIO[3] 11b: GIO[7]
RI2[1:0]	00b: GIE[2] 01b: GIE[6] 10b: GIO[2] 11b: GIO[6]
RI1[1:0]	00b: GIE[1] 01b: GIE[5] 10b: GIO[1] 11b: GIO[5]
RI0[1:0]	00b: GIE[0] 01b: GIE[4] 10b: GIO[0] 11b: GIO[4]

For additional information, refer to the RDIxRI register on page 179.

16.2.2 RDIxSYN Register

Add.	Name	Rows	Bit 7	Bit 6	Bit 5	Bit 4	Bit 3	Bit 2	Bit 1	Bit 0	Access
x,B1h	RDI0SYN	3, 2					RI3SYN	RI2SYN	RI1SYN	RI0SYN	RW : 00
x,B9h	RDI1SYN	3, 2					RI3SYN	RI2SYN	RI1SYN	RI0SYN	RW : 00
x,C1h	RDI2SYN	3					RI3SYN	RI2SYN	RI1SYN	RI0SYN	RW : 00

LEGEND
x An “x” before the comma in the address field indicates that the register exists in both register banks.

The Row Digital Interconnect Synchronization Register (RDIxSYN) is used to control the input synchronization.

The RDIxRI Register and the RDIxSYN Register are the only two registers that affect digital PSoC row input signals. All other registers are related to output signal configuration.

By default, each row input is double synchronized to the SYSCLK (system clock), which runs at 24 MHz unless external clocking mode is enabled. However, a user may choose to disable this synchronization by setting the appropriate RIxSYN bit in the RDIxSYN register. Table 16-2 lists the bit meanings for each implemented bit of the RDIxSYN register.

Bit 3: RI3SYN. This bit controls the input synchronization for row 3.

Bit 2: RI2SYN. This bit controls the input synchronization for row 2.

Bit 1: RI1SYN. This bit controls the input synchronization for row 1.

Bit 0: RI0SYN. This bit controls the input synchronization for row 0.

Table 16-2. RDIxSYN Register

RI3SYN	0: Row input 3 is synchronized to SYSCLK 1: Row input 3 is passed without synchronization
RI2SYN	0: Row input 2 is synchronized to SYSCLK 1: Row input 2 is passed without synchronization
RI1SYN	0: Row input 1 is synchronized to SYSCLK 1: Row input 1 is passed without synchronization
RI0SYN	0: Row input 0 is synchronized to SYSCLK 1: Row input 0 is passed without synchronization

For additional information, refer to the RDIxSYN register on page 180.

16.2.3 RDIxIS Register

Add.	Name	Rows	Bit 7	Bit 6	Bit 5	Bit 4	Bit 3	Bit 2	Bit 1	Bit 0	Access
x,B2h	RDI0IS	3, 2			BCSEL[1:0]		IS3	IS2	IS1	IS0	RW : 00
x,BAh	RDI1IS	3, 2			BCSEL[1:0]		IS3	IS2	IS1	IS0	RW : 00
x,C2h	RDI2IS	3			BCSEL[1:0]		IS3	IS2	IS1	IS0	RW : 00

LEGEND
x An “x” before the comma in the address field indicates that the register exists in both register banks.

The Row Digital Interconnect Input Select Register (RDIxIS) is used to configure the A inputs to the digital row LUTS and select a broadcast driver from another row if present.

Each LUT has two inputs, where one of the inputs is configurable (Input A) and the other input (Input B) is fixed to a row output. Figure 16-3 presents an example of LUT configuration

Figure 16-3. Example of LUT0 Configuration.

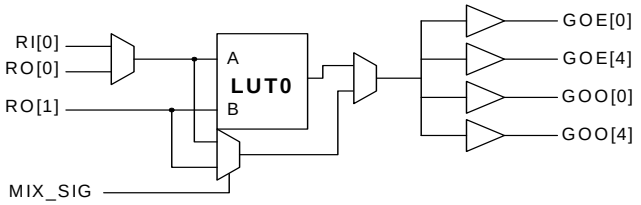

The configurable LUT input (Input A) chooses between a single row output and a single row input. Table 16-3 lists the options for each LUT in a row. The bits are labeled IS, meaning Input Select. The LUT’s fixed input is always the RO[LUT number + 1], such as LUT0’s fixed input is RO[1], LUT1’s fixed input is RO[2], …, and LUT3’s fixed input is RO[0].

Bits 5 and 4: BCSEL[1:0]. These bits are used to determine which digital PSoC row will drive the local broadcast net. If a row number is selected that does not exist, the broadcast net is driven to a logic 1 value. If any digital PSoC block in the local row has its DxCxFN[BCEN] bit set, the broadcast select is disabled. See the “DxCxxFN Registers” on page 360.

Bit 3: IS3. This bit controls the ‘A’ input of LUT 3.

Bit 2: IS2. This bit controls the ‘A’ input of LUT 2.

Bit 1: IS1. This bit controls the ‘A’ input of LUT 1.

Bit 0: IS0. This bit controls the ‘A’ input of LUT 0.

Table 16-3. RDIxIS Register Bits

BCSEL[1:0]	00b: Row broadcast net driven by row 0 broadcast net.* 01b: Row broadcast net driven by row 1 broadcast net.* 10b: Row broadcast net driven by row 2 broadcast net.* 11b: Row broadcast net driven by row 3 broadcast net.*
IS3	0: The ‘A’ input of LUT3 is RO[3] 1: The ‘A’ input of LUT3 is RI[3]
IS2	0: The ‘A’ input of LUT2 is RO[2] 1: The ‘A’ input of LUT2 is RI[2]
IS1	0:The ‘A’ input of LUT1 is RO[1] 1: The ‘A’ input of LUT1 is RI[1]
IS0	0: The ‘A’ input of LUT0 is RO[0] 1: The ‘A’ input of LUT0 is RI[0]
* When the BCSEL value is equal to the row number, the tri-state buffer that drives the row broadcast net from the input select mux is disabled, so that one of the row’s blocks may drive the local row broadcast net. * Refer to Figure 16-2. * If the row is not present in the part, the selection provides a logic 1 value.	

For additional information, refer to the RDIxIS register on page 181.

16.2.4 RDIxLTx Registers

Add.	Name	Rows	Bit 7	Bit 6	Bit 5	Bit 4	Bit 3	Bit 2	Bit 1	Bit 0	Access
x,B3h	RDI0LT0	3, 2	LUT1[3:0]				LUT0[3:0]				RW : 00
x,B4h	RDI0LT1	3, 2	LUT3[3:0]				LUT2[3:0]				RW : 00
x,BBh	RDI1LT0	3, 2	LUT1[3:0]				LUT0[3:0]				RW : 00
x,BCh	RDI1LT1	3, 2	LUT3[3:0]				LUT2[3:0]				RW : 00
x,C3h	RDI2LT0	3	LUT1[3:0]				LUT0[3:0]				RW : 00
x,C4h	RDI2LT1	3	LUT3[3:0]				LUT2[3:0]				RW : 00

LEGEND
x An “x” before the comma in the address field indicates that the register exists in both register banks.

The Row Digital Interconnect Logic Table Register 0 and 1 (RDIxLT0 and RDIxLT1) are used to select the logic function of the digital row LUTS.

The outputs from a digital PSoC row are a bit more complicated than the inputs. Figure 16-2 on page 328 illustrates the output circuitry in a digital PSoC row. In the figure, find a block labeled Lx. This block represents a 2-input look-up table (LUT). The LUT allows the user to specify any one of 16 logic functions that should be applied to the two inputs.

The output of the logic function will determine the value that may be driven on to the Global Output Even and Global Output Odd buses. Table 16-4 lists the relationship between a look-up table’s four configuration bits and the resulting logic function. Some users may find it easier to determine the proper configuration bits setting, by remembering that the configuration’s bits represent the output column of a two-input logic truth table. Table 16-4 lists seven examples of the relationship between the LUT’s output column for a truth table and the LUTx[3:0] configuration bits. Figure 16-3 on page 331 presents an example of LUT configuration.

Bits 7 to 4: LUTx[3:0]. These configuration bits are for a row output LUT.

Bits 3 to 0: LUTx[3:0]. These configuration bits are for a row output LUT.

For additional information, refer to the RDIxLT0 register on page 182 and the RDIxLT1 register on page 184.

Table 16-4. Example LUT Truth Tables

A	B	AND	OR	A+$\overline{B}$	A&$\overline{B}$	A	B	True
0	0	0	0	1	0	0	0	1
0	1	0	1	0	0	0	1	1
1	0	0	1	1	1	1	0	1
1	1	1	1	1	0	1	1	1
LUTx[3:0]		1h	7h	Bh	2h	3h	5h	Fh

Table 16-5. RDIxLTx Register

LUTx[3:0]	0h: 0000: FALSE 1h: 0001: A .AND. $\overline{B}$ 2h: 0010: A .AND. $\overline{B}$ 3h: 0011: $\overline{A}$ 4h: 0100: $\overline{A}$ .AND. B 5h: 0101: B 6h: 0110: A .XOR. B 7h: 0111: A .OR. B 8h: 1000: A .NOR. B 9h: 1001: $\overline{A}$ .XNOR. B Ah: 1010: $\overline{B}$ Bh: 1011: $\overline{A}$ .OR. $\overline{B}$ Ch: 1100: $\overline{A}$ Dh: 1101: $\overline{A}$ .OR. B Eh: 1110: A. NAND. B Fh: 1111: TRUE

16.2.5 RDIxROx Registers

Add.	Name	Rows	Bit 7	Bit 6	Bit 5	Bit 4	Bit 3	Bit 2	Bit 1	Bit 0	Access
x,B5h	RDI0RO0	3, 2	GOO5EN	GOO1EN	GOE5EN	GOE1EN	GOO4EN	GOO0EN	GOE4EN	GOE0EN	RW : 00
x,B6h	RDI0RO1	3, 2	GOO7EN	GOO3EN	GOE7EN	GOE3EN	GOO6EN	GOO2EN	GOE6EN	GOE2EN	RW : 00
x,BDh	RDI1RO0	3, 2	GOO5EN	GOO1EN	GOE5EN	GOE1EN	GOO4EN	GOO0EN	GOE4EN	GOE0EN	RW : 00
x,BEh	RDI1RO1	3, 2	GOO7EN	GOO3EN	GOE7EN	GOE3EN	GOO6EN	GOO2EN	GOE6EN	GOE2EN	RW : 00
x,C5h	RDI2RO0	3	GOO5EN	GOO1EN	GOE5EN	GOE1EN	GOO4EN	GOO0EN	GOE4EN	GOE0EN	RW : 00
x,C6h	RDI2RO1	3	GOO7EN	GOO3EN	GOE7EN	GOE3EN	GOO6EN	GOO2EN	GOE6EN	GOE2EN	RW : 00

LEGEND
x An “x” before the comma in the address field indicates that the register exists in both register banks.

The Row Digital Interconnect Row Output Register 0 and 1 (RDIxRO0 and RDIxRO1) are used to select the global nets that the row outputs drive.

The final configuration bits for outputs from digital PSoC rows are in the two RDIxROx registers. These registers hold the 16 bits that can individually enable the tri-state buffers that connect to all eight of the Global Output Even lines and all eight of the Global Output Odd lines to the row LUTs.

The input to these tri-state drivers are the outputs of the row’s LUTs, as shown in Figure 16-2. This means that any row can drive any global output. Keep in mind that tri-state drivers are being used to drive the global output lines; therefore, it is possible for a part, with more than one digital PSoC row, to have multiple drivers on a single global output line. It is the user’s responsibility to ensure that the part is not configured with multiple drivers on any of the global output lines. Figure 16-3 presents an example LUT configuration.

16.2.5.1 RDIxRO0 Register

Bits 7 to 4: GOxxEN. These configuration bits enable the tri-state buffers that connect to the global output lines for LUT 1.

Bits 3 to 0: GOxxEN. These configuration bits enable the tri-state buffers that connect to the global output lines for LUT 0.

For additional information, refer to the RDIxRO0 register on page 186.

16.2.5.2 RDIxRO1 Register

Bits 7 to 4: GOxxEN. These configuration bits enable the tri-state buffers that connect to the global output lines for LUT 3.

Bits 3 to 0: GOxxEN. These configuration bits enable the tri-state buffers that connect to the global output lines for LUT 2.

For additional information, refer to the RDIxRO1 register on page 187.

16.2.6 RDIxDSM Register

Add.	Name	Rows	Bit 7	Bit 6	Bit 5	Bit 4	Bit 3	Bit 2	Bit 1	Bit 0	Access
x,B7h	RDI0DSM	3, 2	AVG_SEL[3:0]				AVG_EN[3:0]				RW : 00
x,BFh	RDI1DSM	3, 2	AVG_SEL[3:0]				AVG_EN[3:0]				RW : 00
x,C7h	RDI2DSM	3	AVG_SEL[3:0]				AVG_EN[3:0]				RW : 00

LEGEND
x An “x” before the comma in the address field indicates that the register exists in both register banks.

The Row Digital Interconnect Delta Sigma Modulator Function Register (RDIxDSM) is used to select the Delta Sigma Modulator function on the row outputs.

Refer to Figure 16-2 and Figure 16-3.

Bits 7 to 4: AVG_SEL[3:0]. These configuration bits select 1 from 12 digital blocks' primary output as average-control signal.

Bits 3 to 0: AVG_EN[3:0]. These configuration bits enable average function on corresponding RO channel.

For additional information, refer to the RDIxDSM register on page 188.

16.3 Timing Diagram

Figure 16-4. Optional Row Input Synchronization to SYSCLK

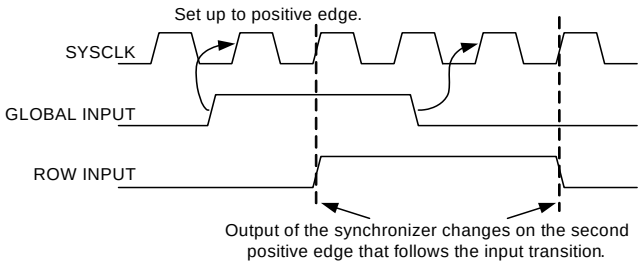

17. Digital Blocks

This chapter covers the configuration and use of the digital PSoC® blocks and their associated registers. For a complete table of the Digital PSoC Block registers, refer to the "Summary Table of the Digital Registers" on page 312. For a quick reference of all PSoC registers in address order, refer to the Register Details chapter on page 125.

17.1 Architectural Description

At the top level, the main components of the digital block are the data path, input multiplexers (muxes), output de-muxes, configuration registers, and chaining signals (see Figure 17-1).

Figure 17-1. Digital Blocks Top-Level Block Diagram

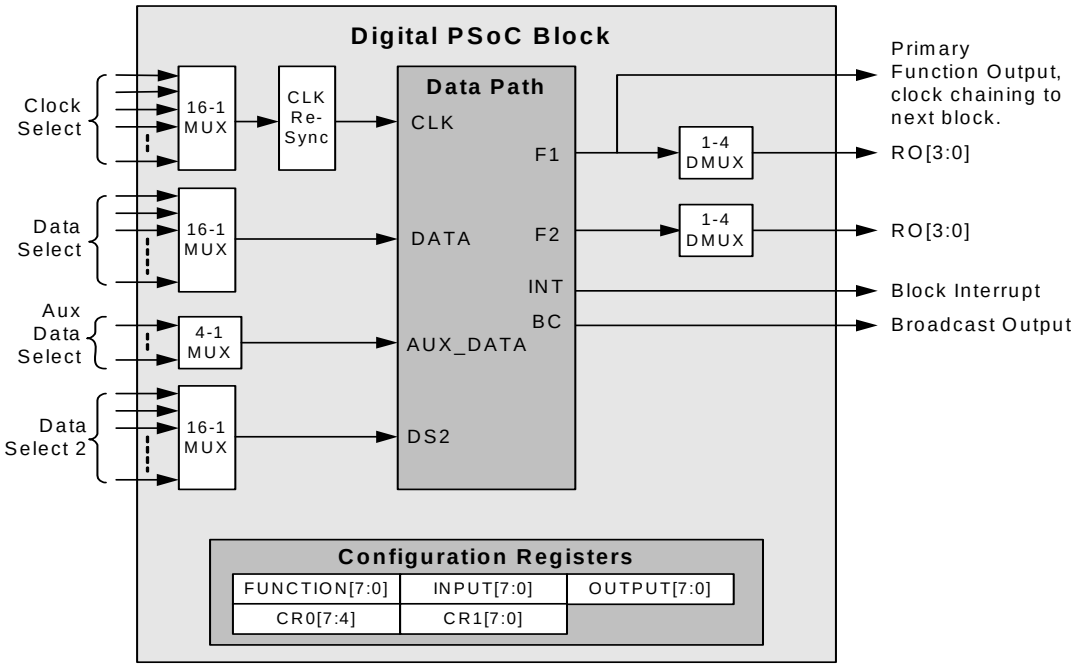

All digital PSoC blocks may be configured to perform any one of seven basic functions: timer, counter, ***pulse width modulator (PWM)***, pseudo random sequence (PRS), Dead Band Generator, Delta Sigma Modulator, or ***cyclic redundancy check (CRC)***. These functions may be used by configuring an individual PSoC block or chaining several PSoC blocks together to form functions that are greater than 8 bits. Digital communications PSoC blocks have two additional functions: master or slave SPI and a full duplex ***UART***.

Each digital PSoC block's function is independent of all other PSoC blocks. Up to eight registers are used to determine the function and state of a digital PSoC block. These registers are discussed in the Register Definitions section. Digital PSoC block function registers end with FN. The individual bit settings for a block's function register are listed in Table 17-23 on page 360. The input registers end with IN and its bit meanings are listed in Table 17-25 on page 361. Finally, the block's outputs are controlled by the output register, which ends in OU.

Each digital PSoC block also has three data registers (DR0, DR1, and DR2) and two control registers (CR0 and CR1). The bit meanings for these registers are heavily function dependent and are discussed with each function's description.

In addition to eight registers that control the digital PSoC block's function and state, a separate interrupt mask bit is available for each digital PSoC block. Each digital PSoC block has a unique interrupt vector; therefore, it can have its own interrupt service routine.

17.1.1 Input Multiplexers

Typically, each function has a clock, kill, and a data input that may be selected from a variety of sources. Each of these inputs is selected with a 16-to-1 input mux.

In addition, there is a 4-to-1 mux which provides an auxiliary input for the SPI Slave function that requires three inputs: Clock, Data, and SS_ (unless the SS_ is forced active with the Aux IO Enable bit). The inputs to this mux are intended to be a selection of the row inputs.

17.1.2 Input Clock Resynchronization

Digital blocks allow a clock selection from one of 16 sources. Possible sources are the system clocks (VC1, VC2, VC3, SYSCLK, and SYSCLKX2), row inputs, and other digital block outputs. To manage clock ***skew*** and ensure that the interfaces between blocks meet timing in all cases, all digital block input clocks must be resynchronized to either SYSCLK or SYSCLKX2, which are the source clocks for all the PSoC device clocking. Also, SYSCLK or SYSCLKX2 may be used directly. The AUXCLK bits in the DxCxxOU register are used to specify the input synchronization. The following rules apply to the use of input clock resynchronization.

1. If the clock input is derived (for example, divided down) from SYSCLK, resynchronize to SYSCLK at the digital block. Most the PSoC device clocks are in this category. For example, VC1 and VC2, and the output of other blocks clocked by VC1 and VC2, or SYSCLK (for setting see Table 17-1).
2. If the clock input is derived from SYSCLKX2, resynchronize to SYSCLKX2. For example, VC3 clocked by SYSCLKX2 or other digital blocks clocked by SYSCLKX2 (for setting, see Table 17-1).
3. Choose direct SYSCLK for clocking directly off of SYSCLK (for setting, see Table 17-1).
4. Choose direct SYSCLKX2 (select SYSCLKX2 in the Clock Input field of the DxCxxIN register) for clocking directly off of SYSCLKX2.
5. Bypass Synchronization. This should be a very rare selection; because if clocks are not synchronized, they may fail setup to CPU read and write commands. However, it is possible for an external pin to asynchronously clock a digital block (for example, if you want to synchronize CPU interaction through interrupts or other techniques, by setting 00 in AUXCLK). This setting is also required for blocks to remain active while in sleep. Use this setting when directly clocking the block from SYSCLKX2.

The following note enumerates configurations that are not allowed, although the hardware does not prevent them. The clock dividers (VC1, VC2, and VC3) may not be configured in such a way as to create an output clock that is equal to SYSCLK or SYSCLKX2.

Note If the input clock frequency matches the frequency of the clock used for synchronization, the block will never receive a clock (see Figure 17-2). As for SYSCLK, this can happen in the following cases:

- Using VC1 configured as divide by one.
- Using VC2 with VC1 and VC2 both configured as divide by one.
- Using VC3 divided by one with a source of VC1 divided by one.
- Using VC3 divided by one with a source of VC2, where both VC1 and VC2 are divided by one.
- Using VC3 divided by one with SYSCLK source.

In all of these cases, select SYSCLK directly in the block. Similarly, if VC3 is configured as divide by one with a source of SYSCLKX2, then select SYSCLKX2 to clock the block directly instead of VC3.

The clock resynchronizer is illustrated in Figure 17-2.

Figure 17-2. Input Clock Resynchronization

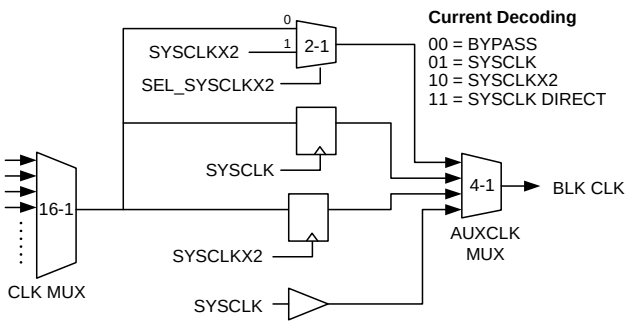

In sleep, SYSCLK is powered down, and therefore input synchronization is not available.

Table 17-1. AUXCLK Bit Selections

Code	Description	Usage
00	Bypass	Use this setting only when SYSCLKX2 (48 MHz) is selected. Other than this case, asynchronous clock inputs are not recommended. This setting is also required for blocks to remain active while in sleep.
01	Resynchronize to SYSCLK (24 MHz)	Use this setting for any SYSCLK-based clock. VC1, VC2, VC3 driven by SYSCLK, digital blocks with SYSCLK-based source clocks, broadcast bus with source based on SYSCLK, row input and row outputs with source based on SYSCLK.
10	Resynchronize to SYSCLKX2 (48 MHz)	Use this setting for any SYSCLKX2-based clock. VC3 driven by SYSCLKX2, digital blocks with SYSCLKX2-based source clocks, broadcast bus with source based on SYSCLKX2, row input and row outputs with source based. on SYSCLKX2.
11	SYSCLK Direct	Use this setting to clock the block directly using SYSCLK. Note that this setting is not strictly related to clock resynchronization; because YSCLK cannot resynchronize itself, it allows a direct skew controlled SYSCLK source.

17.1.2.1 Clock Resynchronization Summary

- Digital PSoC blocks have extremely flexible clocking configurations. To maintain reliable timing, input clocks must be resynchronized.
- The master clock for any clock in the system is either SYSCLK or SYSCLKX2. Determine the master clock for a given input clock and resynchronize to that clock.
- Do not use divide by 1 clocks derived from SYSCLK and SYSCLKX2. Use the direct SYSCLK or SYSCLKX2 clocking option available at the block.

17.1.3 Output Demultiplexers

Most functions have two outputs: a primary and an auxiliary output, the meaning of which are function dependent. Each of these outputs may be driven onto the row output bus. Each demux is implemented with four tri-state drivers. There are two bits in the output register to select one of the four tri-state drivers and an additional bit to enable the selected driver.

17.1.4 Block Chaining Signals

Each digital block has the capability to be chained and to create functions with bit widths greater than eight. There are signals to propagate information, such as Compare, Carry, Enable, Capture and Gate, from one block to the next to implement higher precision functions. The selection made in the function register determines which signals are appropriate for the desired function. User Modules that have been designed to implement digital functions, with greater than 8-bit width, will automatically make the proper selections of the chaining signals, to ensure the correct information flow between blocks.

17.1.5 Input Data Synchronization

Any asynchronous input derived from an external source, such as a GPIO pin input, must be resynchronized through the row input before use into any digital block clock or data input. This is the default mode of operation (resynchronization is on).

17.1.6 Timer Function

A timer consists of a period register, a ***synchronous*** down counter, and a capture/compare register, all of which are byte wide. When the timer is disabled and a period value is written into DR1, the period value is also loaded into DR0. When the timer is enabled, the counter counts down until positive terminal count (a count of 00h) is reached. On the next clock edge, the period is reloaded and, on subsequent clocks, counting continues. The terminal count signal is the primary function output. (Refer to the timing diagram for this function on page 363.) This can be configured as a full or half clock cycle.

This function also supports multi-shot mode. When the multi-shot register is set to non-zero, the function is in multi-shot mode. For example, if the multi-shot register is set to 01h, the function is disabled after it reaches the first 00 value in DR0. If the multi-shot register is set to 02h, when the function reaches the first 00, DR0 is reloaded and runs again. The function is disabled after the second 00 in DR0 register. The multi-shot supports up to a MAX number of 15 shots.

Hardware capture occurs on the positive edge of the data input. This event transfers the current count from DR0 to DR2. The captured value may then be read directly from DR2. A software capture function is equivalent to a hardware capture. A CPU read of DR0, with the timer enabled, triggers the same capture mechanism. The hardware and software capture mechanisms are ORed in the capture circuitry. Because the capture circuitry is positive edge sensitive, during an interval where the hardware capture input is high, a software capture is masked and will not occur.

The timer also implements a compare function between DR0 and DR2. The compare signal is the auxiliary function output. A limitation, in regards to the compare function, is that the capture and compare function both use the same register (DR2). Therefore, if a capture event occurs, it will overwrite the compare value.

There is another mode, called NPS mode, supported at the compare output. When it is set, the compare output is delayed half clock cycle. It is used to achieve a higher resolution when 48MHz clock is used as block clock.

This function also supports KILL function. There are two KILL modes: KILL-Disable and KILL-Reload. In KILL-Disable mode, the function is disabled immediately when kill is asserted. The function must be restarted in firmware. In KILL-Reload mode, the DR0 register and multi-shot counter register stays in reload state when KILL is high, and the function counts down when KILL is released. The function outputs are gated to zeros when KILL is asserted. For more detail see “Timing Diagrams” on page 363.

Mode bit 1 in the function register sets the compare type (DR0 <= DR2 or DR0 < DR2) and Mode bit 0 sets the interrupt type (Terminal Count or Compare). There are also two more bits used to control interrupts, located at bit 1 in CR0 and bit 0 in CR1.

Table 17-2. Timer Interrupt Source

Interrupt Source	Non Multi-shot Mode			Multi-shot Mode		
	KILL_INT (CR1[0])	Capture INT (CR0[1])	Compare True (FN[1])	KILL_INT (CR1[0])	Capture INT (CR0[1])	Compare True (FN[1])
KILL	1	*	*	1	*	*
Capture	0	1	*	0	1	*
Compare	0	0	1	0	0	1
TC	0	0	0			
Last-Shot				0	0	0

Timers may be chained in 8-bit lengths up to 32 bits.

Table 17-3. Timer Control Signals in Chained Block

Item	Configured in
Capture	LSB Block
KILL	LSB Block
Multi-shot Period	MSB Block
Clock	All chained Blocks
KILL Mode	All chained Blocks

17.1.6.1 Usability Exceptions

The following are usability exceptions for the Timer function:

1. Capture operation is not supported at 48 MHz.
2. DR2 is not writeable when the Timer is enabled.
3. CR1 is not writeable when the Timer is enabled.

17.1.6.2 Block Interrupt

The Timer block has a selection of four interrupt sources. Interrupt on Terminal Count (TC) and Interrupt on Compare may be selected in Mode bit 0 of the function register. The third interrupt source, Interrupt on Capture, may be selected with the Capture Interrupt bit in the control register.

- **Interrupt on Terminal Count**: The positive edge of terminal count (primary output) generates an interrupt for this block. The timing of the interrupt follows the TC pulse width setting in the control register.
- **Interrupt on Compare**: The positive edge of compare (auxiliary output) generates an interrupt for this block.
- **Interrupt on Capture**: Hardware or software capture generates an interrupt for this block. The interrupt occurs at the closing of the DR2 latch on capture.
- **Interrupt on KILL**: The interrupt occurs when KILL is asserted.

17.1.7 Counter Function

A Counter consists of a period register, a synchronous down counter, and a compare register. The Counter function is identical to the Timer function, with the following exceptions:

- The data input is a counter gate (enable), rather than a capture input. Counters do not implement synchronous capture. The DR0 register in a counter should not be read when it is enabled.
- The compare output is the primary output and the Terminal Count (TC) is the auxiliary output (opposite of the Timer).
- Terminal count output is full cycle only.

When the counter is disabled and a period value is written into DR1, the period value is also loaded into DR0. When the counter is enabled, the counter counts down until terminal count (a count of 00h) is reached. On the next clock edge, the period is reloaded and, on subsequent clocks, counting continues. (Refer to the timing diagram for this function on page 365.)

17.1.7.1 Counter Timing

This function also supports multi-shot mode. When the multi-shot register is set to non-zero, the function is in multi-shot mode. For example, if the multi-shot register is set to 01h, the function is disabled after it reaches the first 00 value in DR0. If the multi-shot register is set to 02h, when the function reaches the first 00, DR0 reloads and runs again. The function is disabled after the second 00 in DR0 register. The multi-shot supports up to the MAX number of 15 shots.

The counter implements a compare function between DR0 and DR2. The Compare signal is the primary function output. Mode bit 1 sets the compare type (DR0 <= DR2 or DR0 < DR2) and Mode bit 0 sets the interrupt type (terminal count or compare). Note that in default if you write to DR2 in function running state, DR2 data changes immediately and then the compare output may change immediately after. A configuration bit in CR0[1] can be used to delay the DR2 data changing until TC occurs (that is, at DR0 reloading). Therefore unusual changes will not be seen on compare out after changing the DR2 data.

There is another mode, called NPS mode, supported at the compare output. When it is set, the compare output is delayed half clock cycle. It is used to achieve a higher resolution when 48 MHz clock is used as block clock.

This function also supports KILL function. There are two KILL modes: KILL-Disable and KILL-Reload. In KILL-Disable mode, the function is disabled immediately when kill is asserted. The function must be restarted in firmware. In KILL-Reload mode, the DR0 register and multi-shot counter register stays in reload state when KILL is high, and the function counts down when KILL is released. The function

outputs are gated to zeros when KILL is asserted. For more detail see “Timing Diagrams” on page 363.

The data input functions as a gate to counter operation. The counter only counts and reloads when the data input is asserted (logic 1). When the data input is negated (logic 0), counting (including the period reload) is halted.

The Interrupt is controlled by two register bits. See the following table.

Table 17-4. Counter Interrupt Source

Interrupt Source	Non Multi-shot Mode		Multi-shot Mode	
	KILL_INT (CR1[0])	Compare True (FN[1])	KILL_INT (CR1[0])	Compare True (FN[1])
KILL	1	*	1	*
Compare	0	1	0	1
TC	0	0		
Last-Shot			0	0

Counters may be chained in 8-bit blocks up to 32 bits.

Table 17-5. Counter Control Signals in Chained Blocks

Item	Configured in
Gate	LSB Block
KILL	LSB Block
Multi-shot Period	MSB Block
Clock	All Chained Blocks
KILL Mode	All Chained Blocks

17.1.7.2 Usability Exceptions

The following are usability exceptions for the Counter function:

1. DR0 may only be read (to transfer DR0 data to DR2) when the block is disabled.
2. CR1 is not writeable when the Counter is enabled.

17.1.7.3 Block Interrupt

The Counter block has a selection of three interrupt sources. Interrupt on Terminal Count (TC) and Interrupt on Compare may be selected in Mode bit 0 of the function register.

- **Interrupt on Terminal Count**: The positive edge of terminal count (auxiliary output) generates an interrupt for this block. The timing of the interrupt follows the TC pulse width setting in the control register.
- **Interrupt on Compare**: The positive edge of compare (primary output) generates an interrupt for this block.
- **Interrupt on KILL**: The interrupt occurs when KILL is asserted.

17.1.8 Dead Band Function

The Dead Band function generates output signals on both the primary and auxiliary outputs of the block, see Figure 17-3. Each of these outputs is one ***phase*** of a two-phase, non-overlapping clock generated by this function. The two clock phases are never high at the same time and the period between the clock phases is known as the ***dead band***. The width of the dead band time is determined by the value in the period register. This dead band function can be driven with a PWM as an input clock or it can be clocked directly by toggling a bit in software using the Bit-Bang interface. If the clock source is a PWM, this will make a two output PWM with guaranteed non-overlapping outputs. An active asynchronous signal on the KILL data input disables both outputs immediately.

The PWM with the Dead Band User Module configures one or two blocks to create an 8- or 16-bit PWM and configures an additional block as the Dead Band function.

A dead band consists of a period register, a synchronous down counter, and a special dead band circuit. The DR2 register is only used to read the contents of DR0. As with the counter, when the dead band is disabled and a period value is written into DR1, the period value is also loaded into DR0. (Refer to the timing diagrams for this function on page 367.)

The dead band has two inputs: a PWM reference signal and a KILL signal. The PWM reference signal may be derived from one of two sources. By default, it is hardwired to be the primary output of the previous block. This previous block output is wired as an input to the 16-to-1 clock input mux. In the dead band case, the previous block output is wired directly to the dead band reference input. If this mode is used, a PWM, or some other ***waveform*** generator, must be instantiated in the previous digital block. There is also an optional Bit Bang mode. In this mode, firmware toggles a register bit to generate a PWM reference; and therefore, the dead band may be used as a stand-alone block.

The KILL signal is derived from the data input signal to the block. Mode [1:0] is encoded as the Kill Type. In all cases when kill is asserted, the output is forced low immediately.

Figure 17-3. Dead Band Functional Overview

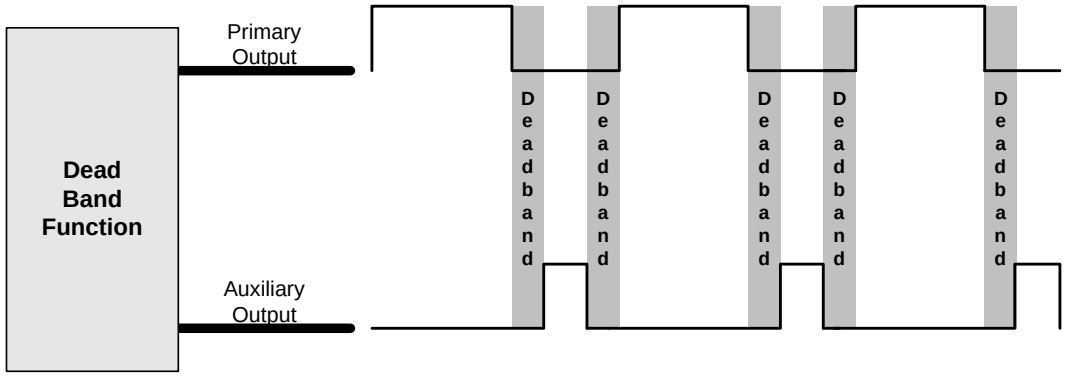

Mode bits are encoded for kill options and are detailed in the following table.

Table 17-6. Dead Band Kill Options

Mode [1:0]	Description
00b	Synchronous Restart KILL mode. Internal state is reset and reference edges are ignored, until the KILL signal is negated.
01b	Disable KILL mode. Block is disabled. KILL signal must be negated and user must re-enable the block in firmware to resume operation.
10b	Asynchronous KILL mode. Outputs are low only for the duration that the KILL signal is asserted, subject to a minimum disable time between one-half to one and one-half clock cycles. Internal state is unaffected.
11b	Reserved

When the block is initially enabled, both outputs are low. After enabling, a positive or negative edge of the incoming PWM reference enables the counter. The counter counts down from the period value to terminal count. At terminal count, the counter is disabled and the selected phase is asserted high. On the opposite edge of the PWM input, the output that was high is negated low and the process is repeated with the opposite phase. This results in the generation of a two phase non-overlapping clock matching the frequency and pulse width of the incoming PWM reference, but separated by a dead time derived from the period and the input clock.

There is a deterministic relationship between the incoming PWM reference and the output phases. The positive edge of the reference causes the primary output to be asserted to '1' and the negative edge of the reference causes the auxiliary output to be asserted to '1'.

17.1.8.1 Usability Exceptions

The following are usability exceptions for the Dead Band function.

1. The Dead Band function may not be chained.
2. Programming a dead band period value of 00h is not supported. The block output is undefined under this condition.
3. If the period (of either the ***high time*** or the ***low time*** of the reference input) is less than the programmed dead time, than the associated output phase will be held low.
4. DR0 may only be read (to transfer DR0 data to DR2) when the block is disabled.
5. If the asynchronous KILL signal is being used in a given application, the output of the dead band cannot be connected directly to the input of another digital block in the same row. Because the kill is asynchronous, the digital block output must be resynchronized through a row input before using it as a digital block input.

17.1.8.2 Block Interrupt

The Dead Band block has two interrupt sources. The default one is the Phase 1 primary output clock. When the KILL signal is asserted, the interrupt follows the same behavior of the Phase 1 output with respect to the various KILL modes. When KILL_INT is selected the KILL signal itself becomes interrupt. This is the second choice. **However, set KILL_INT only in KILL-Sync and KILL-Async mode**.

17.1.9 PWMDBL Function

The PWMDBL is an integrated dead band PWM. From a functional perspective, it combines the counter and dead band function in a single block with limited dead band width selections. A PWMDBL consists of a period register, a synchronous down counter, a compare register, and a dead band width register. The PWMDBL counter function is identical to the Counter function, with the following exceptions:

- There is no counter gate input. The counting down is controlled by different sub modes.
- The multi-shot mode in PWMDBL is called PPG (Programmable Pulse Generator) mode. The function is not disabled at last-shot but instead stops counting. Hardware or software start (write one again to ‘EN’ bit) resumes the counting. Similarly, if a last shot occurs, and the start bit is high, counting continues, and the high of START does not affect the running counting.

- The comparison is DR0 > DR2, instead of DR0<= DR2 or DR0<DR2. Therefore the compare out waveform is reversed.
- Writing to DR2 is always buffered when PWMDBL is running. Therefore you do not need to set the register such as in the Counter function.
- TC and Compare are not directly available; they are only available through the dead band function.
- KILL modes follow dead band function's setting.
- KILL does not affect the counter running state except in KILL-disable mode. The whole function is disabled when KILL is asserted in KILL-Disable mode.

The PWMDBL dead band function is identical to the Dead Band function, with the following exceptions:

- No need to set ref clock input from previous block. It derives from counter function's compare out in current block.
- Dead band width selections are limited. It can be 0/1/2/4/8/16/32/64 block clock cycles. 0 means there is no dead band protection. DR0 is not the dead band width register.
- Dead band function uses the digital block clock, the same as is used by the counter.
- The Kill signal can act as an interrupt source.

PWMDBL may be chained in 8-bit blocks up to 32 bits.

Table 17-7. PWMDBL Control signals in Chained Blocks

Item	Configured in
KILL	LSB Block
START	LSB Block
Multi-shot Period	MSB Block
Dead Band Width	MSB Block
KILL Mode (in FN)	MSB Block
Clock	All Chained Blocks

17.1.9.1 Usability Exceptions

The following are usability exceptions for the PWMDBL function:

1. DR0 may only be read (to transfer DR0 data to DR2) when the block is disabled.
2. CR1 is not writeable when the PWMDBL is enabled.

17.1.9.2 Block Interrupt

The PWMDBL block has two interrupt sources. They are identical to the Dead Band function.

17.1.10 CRCPRS Function

A Cyclic Redundancy Check/Pseudo Random Sequence (CRCPRS) function consists of a polynomial register, a ***Linear Feedback Shift Register (LFSR)***, and a seed register. (See Figure 17-4 on page 342.) When the CRCPRS block is disabled and a ***seed value*** is written into DR2, the seed value is also loaded into DR0. When the CRCPRS is enabled, and synchronous clock and data are applied to the inputs, a CRC is computed on the ***serial*** data input stream. When the data input is forced to '0', then the block functions as a pseudo random sequencer (PRS) generator with the output data generated at the clock rate. The most significant bit (MSb) of the CRCPRS function is the primary output.

The CRCPRS has a selection of compare modes between DR0 and DR2. The default behavior of the compare is DR0==DR2. When the PRS function cycles through the seed value as one of the valid counts, the compare output is asserted high for one clock cycle. This is regarded as the epoch of the pseudo random sequence. The mode bits can be used to set other compare types. Setting Mode bit 0 to '1' causes the compare behavior to revert to DR0 <= DR2 or DR0 < DR2, depending upon Mode bit 1. The compare value is the auxiliary output. An interrupt is generated on compare true.

In PRS mode (that is, data input is fixed to zero), the Multi-shot and KILL functions are available. These modes are identical to the Timer/Counter function with the following exceptions:

- The multi-shot counter will count down when DR0 is equal to DR2 (seed), rather than when DR0 is equal to 00h in Timer/Counter. Note that the equivalence caused by writing DR2 in function disable mode or caused by KILL-reload will be ignored.
- KILL-Reload will reload DR2 data (seed) to DR0 instead of DR1 data (period in Timer/Counter).

CRCPRS mode offers an optional Pass function. By setting the Pass Mode bit in the CR0 register (bit 1), the CRCPRS function is overridden. In this mode, the data input is passed transparently to the primary output and an interrupt is generated on the rising of the data input. Similarly, the CLK input is passed transparently to the auxiliary output. This can only be used to pass signals to the global outputs. If the output of a pass function is needed as an input to another digital block, it must be resynchronized through the globals and row inputs.

CRCPRS supports shift mode. The LFSR acts as a digital delay line if all feedbacks are tied to zero. The shift-out data will appear on MSB bus. Note that 'Pass' mode has higher priority than 'Shift' mode.

Figure 17-4. CRCPRS LFSR Structure

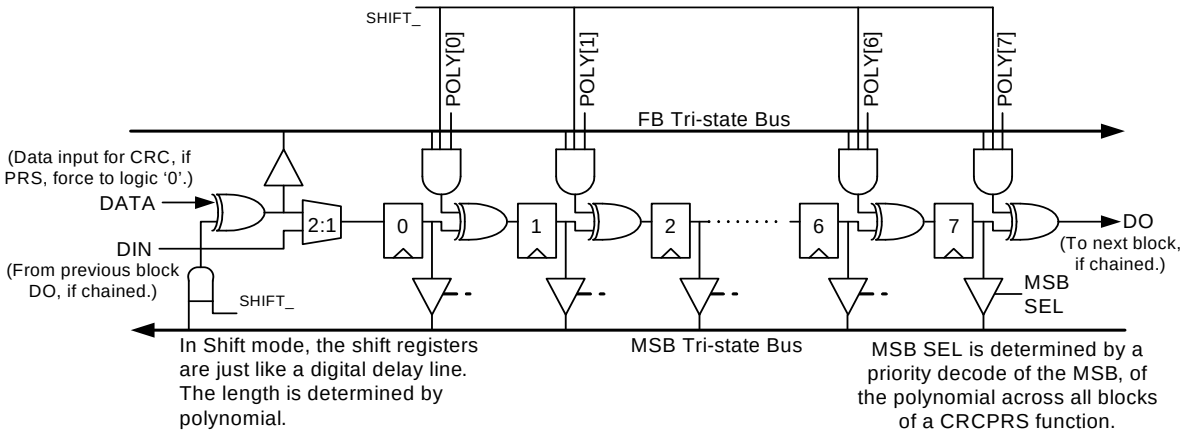

LFSR Structure

The LFSR (Linear Feedback Shift register) structure, as shown in Figure 17-4, is implemented as a modular ***shift*** register generator. The least significant block in the chain inputs the MSb and XORs it with the DATA input, in the case of CRC computation. For PRS computation, the DATA input is forced to logic 0 (by input selection); and therefore, the MSb bus is directly connected to the FB bus. In the case of a chained block, the data input (DIN) comes directly from the data output (DO) of the LFSR in the previous block. The MSb selection, derived from the priority decode of the polynomial, enables one of the tri-state drivers to drive the MSb bus.

Determining the CRC Polynomial

Computation of an n-bit result is generally specified by a polynomial with n+1 terms, the last of which is X_{16}, where

$$X_0 = 1 \qquad \textbf{Equation 1}$$

As an example, the CRC-CCIT 16-bit polynomial is:

$$CRC - CCIT = X_{16} + X_{12} + X_5 + 1 \qquad \textbf{Equation 2}$$

The CRCPRS hardware assumes the presence of the X_0 term; and therefore, this polynomial can be expressed in 16 bits as 1000 1000 0001 0000b or 8810h. Two consecutive digital blocks may be allocated to perform this function, with 88h as the MS block polynomial (DR1) and 10h as the LS block polynomial value.

Determining the PRS Polynomial

Generally, PRS polynomials are selected from pre-computed reference tables. It is important to note that there are two common ways to specify a PRS polynomial: simple register configuration and modular configuration. In the simple method, a ***shift register*** is implemented with a reduction XOR of the MSb and feedback taps as input into the least significant bit. In the modular method, there is an XOR operation implemented between each register bit and each tap point enables the XOR with the MSb for that given bit. The CRCPRS function implements the modular approach.

These are equivalent methods. However, there is a conversion that should be understood. If tables are specified in simple register format, then a conversion can be made to the modular format by subtracting each tap from the MS tap, as shown in the following example.

To implement a 7-bit PRS of length 127, one possible code is [7,6,4,2]s, which is in simple format. The modular format is [7,7-6,7-4,7-2]m or [7,1,3,5]m which is equivalent to [7, 5, 3, 1]. Determining the polynomial to program is similar to the CRC example above. Set a ***binary*** bit for each tap (with bit 0 of the register corresponding to tap 1). Therefore, the code [7,5,3,1] corresponds to 0101 0101b or 55h.

In both the CRC and PRS cases, an appropriate seed value should be selected. All ones for PRS, or all ones or all zeros for CRC are typical values. Note that a seed value of all zeros should not be used in a PRS function, because PRS counting is inhibited by this seed.

17.1.10.1 Usability Exceptions

The following are usability exceptions for the CRCPRS function:

1. The polynomial register must only be written when the block is disabled.
2. CR1 is not writeable when the CRCPRS is enabled.

17.1.10.2 Block Interrupt

The CRCPRS block has three interrupt sources. The default one is the compare auxiliary output; that is, the compare output. The second one is data input when CRCPRS is in pass-by mode. The third one is the KILL signal when KILL_INT is selected.

17.1.11 SPI Protocol Function

The Serial Peripheral Interface (SPI) is a Motorola™ specification for implementing full-duplex synchronous serial communication between devices. The 3-wire ***protocol*** uses both edges of the clock to enable synchronous communication, without the need for stringent setup and hold requirements. Figure 17-5 shows the basic signals in a simple connection

Figure 17-5. Basic SPI Configuration.

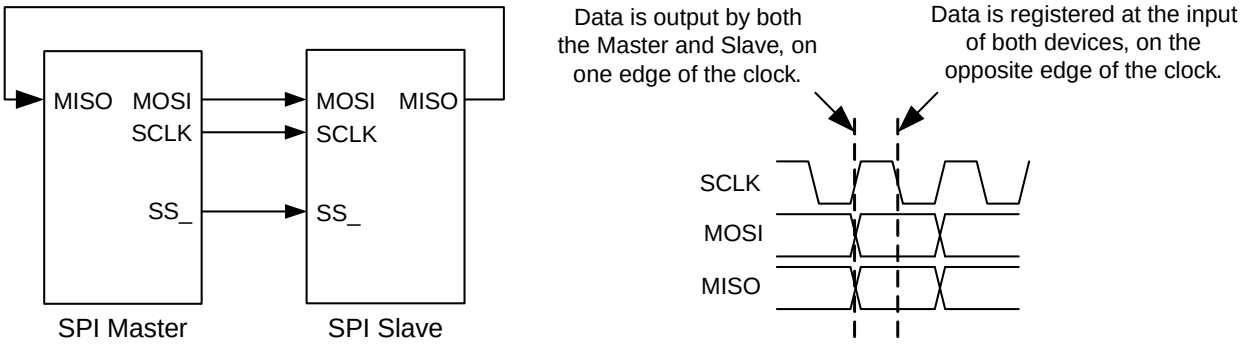

A device can be a master or slave. A master outputs clock and data to the ***slave device*** and inputs slave data. A slave device inputs clock and data from the ***master device*** and outputs data for input to the master. The master and slave together are essentially a circular shift register, where the master is generating the clocking and initiating data transfers.

A basic data transfer occurs when the master sends eight bits of data, along with eight clocks. In any transfer, both master and slave are transmitting and receiving simultaneously. If the master is only sending data, the received data from the slave is ignored. If the master wishes to receive data from the slave, the master must send dummy bytes to generate the clocking for the slave to send data back.

17.1.11.1 SPI Protocol Signal Definitions

The SPI Protocol signal definitions are located in Table 17-8. The use of the SS_ signal varies according to the capability of the slave device.

Table 17-8. SPI Protocol Signal Definitions

Name	Function	Description
MOSI	Master Out Slave In	Master data output.
MISO	Master In Slave Out	Slave data output.
SCLK	Serial Clock	Clock generated by the master.
SS_	Slave Select (active low)	This signal is provided to enable multi-slave connections to the MISO pin. The MOSI and SCLK pins can be connected to multiple slaves, and the SS_ input selects which slave will receive the input data and drive the MISO line.

17.1.12 SPI Master Function

The SPI Master (SPIM) offers SPI operating modes 0-3. By default, the MSb of the data byte is shifted out first. An additional option can be set to reverse the direction and shift the data byte out LSb first. (Refer to the timing diagrams for this function on page 371.)

When configured for SPIM, DR0 functions as a shift register, with input from the DATA input (MISO) and output to the primary output F1 (MOSI). DR1 is the TX Buffer register and DR2 is the RX Buffer register.

The SPI protocol requires data to be registered at the device input, on the opposite edge of the clock that operates the output shifter. An additional register (RXD), at the input to the DR0 shift register, has been implemented for this purpose. This register stores received data for one-half cycle, before it is clocked into the shift register.

The SPIM controls ***data transmission*** between master and slave, because it generates the bit clock for internal clocking and for clocking the SPIS. The bit clock is derived from the CLK input selection. Because the PSoC system clock generators produce clocks with varying duty cycles, the SPIM divides the input CLK by two to produce a bit clock with a 50 percent duty cycle. This clock is gated, to provide the SCLK output on the auxiliary output, during byte transmissions.

There are four control bits and four status bits in the control register that provide for PSoC device interfacing and synchronization.

The SPIM hardware has no support for driving the Slave Select (SS_) signal. The behavior and use of this signal is application and PSoC device dependent and, if required, must be implemented in firmware.

SPIM supports variable length from 8 bits to 16 bits. Two adjacent communication blocks are able to be chained together to achieve MAX 16-bit SPI. Note the last DCC block in one row can be chained with the first DCC block in next row. Table 17-9 shows the configurations in different length requirement. Note that the same clock setting should be used in both blocks. And the SPI output comes from LSB Block and SPI input goes to MSB block if LSB first option is set. Otherwise SPI output comes from MSB block and SPI input goes to LSB block.

Table 17-9. Variable Length SPI Configuration

SPI Length	MSB Block				LSB Block			
	Chain	LSB	SPI Length	End Block (in FN)	Chain	LSB	SPI Length	End Block (in FN)
8-bit	0	*	*	*	N/A	N/A	N/A	N/A
12-bit	1	0	5'b0_1100	1	1	1	5'b0_1100	0

17.1.12.1 Usability Exceptions

The following are usability exceptions for the SPI Protocol function:

1. The MISO input must be resynchronized at the row inputs.
2. The DR2 (Rx Buffer) register is not writeable.
3. CR1 is not writeable when the SPIM is enabled.

17.1.12.2 Block Interrupt

The SPIM block has a selection of two interrupt sources: Interrupt on TX Reg Empty (default) or interrupt on SPI Complete. Mode bit 1 in the function register controls the selection. These mode are discussed in detail in "SPIM Timing" on page 371.

If SPI Complete is selected as the block interrupt, the control register must be read in the interrupt routine so that this status bit is cleared; otherwise, no subsequent interrupts are generated.

17.1.13 SPI Slave Function

The SPI Slave (SPIS) offers SPI operating modes 0-3. By default, the MSb of the data byte is shifted out first. An additional option can be set to reverse the direction and shift the data byte out LSb first. (Refer to the timing diagrams for this function on page 374.)

When configured for SPI, DR0 functions as a shift register, with input from the DATA input (MOSI) and output to the primary output F1 (MISO). DR1 is the TX Buffer register and DR2 is the RX Buffer register.

The SPI protocol requires data to be registered at the device input, on the opposite edge of the clock that operates the output shifter. An additional register (RXD), at the input to the DR0 shift register, is implemented for this purpose. This register stores received data for one-half cycle before it is clocked into the shift register.

The SPIS function derives all clocking from the SCLK input (typically an external SPI Master). This means that the master must initiate all transmissions. For example, to read a byte from the SPIS, the master must send a byte.

There are four control bits and four status bits in the control register that provide for PSoC device interfacing and synchronization.

In the SPIS, there is an additional data input, Slave Select (SS_), which is an ***active low*** signal. SS_ must be asserted to enable the SPIS to receive and transmit. SS_ has two high level functions: 1) To allow for the selection of a given slave in multi-slave environment, and 2) To provide additional clocking for TX data queuing in SPI modes 0 and 1.

SS_ may be controlled from an external pin through a Row Input or can be controlled by way of user firmware.

When SS_ is negated, the SPIS ignores any MOSI/SCLK input from the master. In addition, the SPIS ***state machine*** is reset, and the MISO output is forced to idle at logic 1. This allows for a wired-AND connection in a multi-slave environment. Note that if High-Z output is required when the slave is not selected, this behavior must be implemented in firmware with I/O writes to the port drive register.

SPIS also supports variable length from 8 bits to 16 bits. Two adjacent communication blocks can be chained together to achieve MAX 16-bit SPI. Note the last DCC block in one row can be chained with the first DCC block in the next row. SPIS variable length configuration is identical to variable length configuration in SPIM.

17.1.13.1 Usability Exceptions

The following are usability exceptions for the SPI Slave function:

1. CR1 is not writeable when the SPIS is enabled.

17.1.13.2 Block Interrupt

The SPIS block has a selection of two interrupt sources: Interrupt on TX Reg Empty (default) or interrupt on SPI Complete (same selection as the SPIM). Mode bit 1 in the function register controls the selection.

If SPI Complete is selected as the block interrupt, the control register must still be read in the interrupt routine so that this status bit is cleared; otherwise, no subsequent interrupts are generated.

17.1.14 Asynchronous Transmitter and Receiver Functions

The Asynchronous Transmitter and Receiver functions are illustrated in Figure 17-6.

Figure 17-6. Asynchronous Transmitter and Receiver Block Diagram

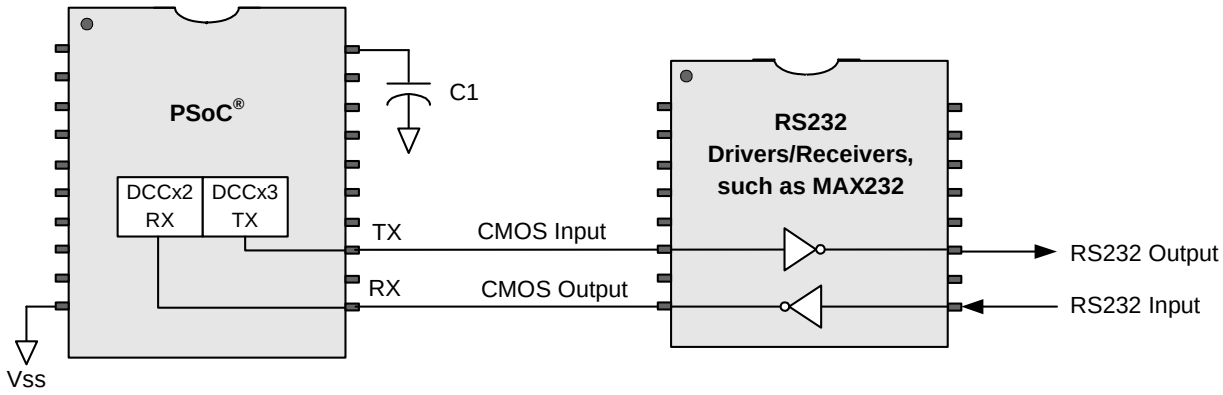

17.1.14.1 Asynchronous Transmitter Function

In the Transmitter function, DR0 functions as a shift register, with no input and with the TXD serial ***data stream*** output to the primary output F1. DR1 is a TX Buffer register and DR2 is unused in this configuration. (Refer to the timing diagrams for this function on page 377.)

Unlike SPI, which has no output latency, the TXD output has one cycle of ***latency***. This is because a mux at the output must select which bits to shift out: the shift register data, framing bits, ***parity***, or mark bits. The output of this mux is registered to remove glitches. When the block is first enabled or when it is idle, a mark bit (logic 1) is output.

The ***clock generator*** is a free running divide-by-eight circuit. Although dividing the clock is not necessary for the Transmitter function, the Receiver function does require a divide by eight for input sampling. It is also done in the Transmitter function, to allow the TX and RX functions to run off the same baud rate generator.

There are two formats supported: A 10-bit frame size including one start bit, eight data bits, and one ***stop bit*** or an 11-bit frame size including one start bit, eight data bits, one parity bit, and one stop bit.

The parity generator can be configured to output either even or odd parity on the eight data bits.

A write to the TX Buffer register (DR1) initiates a transmission and an additional byte can be buffered in this register, while transmission is in progress.

An additional feature of the Transmitter function is that a clock, generated with setup and hold time for the data bits only, is output to the auxiliary output. This allows connection to a CRC generator or other digital blocks.

17.1.14.2 Usability Exceptions

The following is a usability exception for the Transmitter function.

1. The Transmitter function may not be chained.

17.1.14.3 Block Interrupt

The Transmit block has a selection of two interrupt sources. Interrupt on TX Reg Empty (default) or interrupt on TX Complete. Mode bit 1 in the function register controls the selection.

If TX Complete is selected as the block interrupt, the control register must still be read in the interrupt routine so that this status bit is cleared; otherwise, no subsequent interrupts are generated.

17.1.14.4 Asynchronous Receiver Function

In the Receiver function, DR0 functions as the serial data shift register with RXD input from the DATA input selection. DR2 is an RX Buffer register and DR1 is unused in this configuration. (Refer to the timing diagrams for this function on page 379.)

The clock generator and START detection are integrated. The clock generator is a divide by eight which, when the system is idle, is held in reset. When a START bit (logic 0) is detected on the RXD input, the reset is negated and a ***bit rate (BR)*** clock is generated, subsequently sampling the RXD input at the center of the bit time. Every subsequent START bit resynchronizes the clock generator to the incoming bit rate.

There are two formats supported: A 10-bit frame size including one start bit, eight data bits, and one stop bit, or an 11-bit frame size including one start bit, eight data bits, one parity bit, and one stop bit.

The received data is an input to the parity generator. It is compared with a received parity bit, if this feature is enabled. The parity generator can be configured to output either even or odd parity on the eight data bits.

After eight bits of data are received, the byte is transferred from the DR0 shifter to the DR2 RX Buffer register.

An additional feature of the Receiver function is that input data (RXD) and the synchronized clock are passed to the primary output and auxiliary output, respectively. This allows connection to a CRC generator or other digital block.

17.1.14.5 Usability Exceptions

The following are usability exceptions for the Asynchronous Receiver function.

1. The RXD input must be resynchronized through the row inputs.
2. DR2 is a read only register.

17.1.14.6 Block Interrupt

The Receiver has one fixed interrupt source, which is the RX Reg Full status.

The RX Buffer register must always be read in the RX interrupt routine, regardless of error status, and so on., so that RX Reg Full status bit is cleared; otherwise, no subsequent interrupts are generated.

17.1.15 DSM function

The Delta-Sigma-Modulator (DSM) performs density domain operation. It includes two parts in one dig-block: density signal generation and density domain multiplication.

Figure 17-7. Density Domain Signal Generator

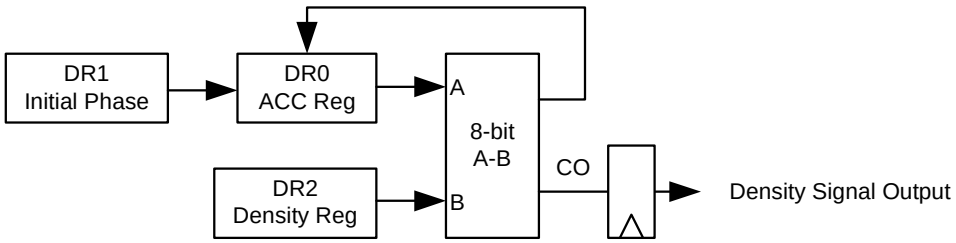

Figure 17-7 illustrates density signal generation flow. The initial data will be loaded into DR0 by writing it into DR1. DR2 is density register. Then DR0 = DR0 – DR2 and the registered carry out is the generated density signal output. It can go to auxiliary output. For example, if you want the density at 50%, set DR2 to 80h, then CO occurs every other clock.

Figure 17-8. Density Signal Multiplication

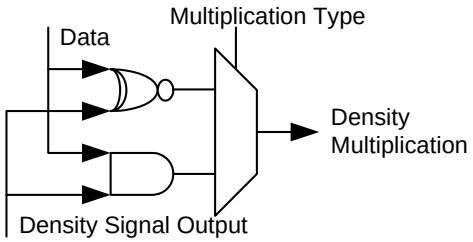

Figure 17-8 shows 2-input density signal multiplication flow. The multiplication type can be bipolar-reference type (through an XNOR) or signal-reference type (through an AND). One input comes from on-block generated density signal. Another comes from outside block through DATA selection MUX. The multiplying result can go to primary output of the block.

DSM function supports two types of KILL mode: KILL-Async or KILL-Disable. In KILL-Async mode, the block outputs are gated by KILL signal. In KILL-Disable mode, the function is disabled when KILL is asserted.

17.1.15.1 Usability Exception

DSM function exists only in communication blocks, and is a signal block function.

1. DR1 is only writable when DSM function is disabled.

17.1.15.2 Block interrupt

There are two interrupt types in DSM function:

1. By default, interrupt occurs when CO goes high.
2. Interrupt occurs when KILL goes high.

17.2 Register Definitions

The following registers are associated with the Digital Blocks and listed in address order. Note that there are two banks of registers associated with the PSoC device. Bank 0 encompasses the user registers (Data and Control registers, and Interrupt Mask registers) for the device and Bank 1 encompasses the Configuration registers for the device. Refer to the “Bank 0 Registers” on page 127 and the “Bank 1 Registers” on page 218 for a quick reference of PSoC registers in address order.

Each register description that follows has an associated register table showing the bit structure for that register. Depending on how many digital rows your PSoC device has (see the Rows column in the register tables below), only certain bits are accessible to be read or written (refer to the table titled “PSoC Device Characteristics” on page 311). The bits that are grayed out throughout this manual are reserved bits and are not detailed in the register descriptions that follow. Reserved bits should always be written with a value of ‘0’.

The Digital Block registers in this chapter are organized by function, as presented in Table 17-10. To reference timing diagrams associated with the digital block registers, see “Timing Diagrams” on page 363. For a complete table of digital block registers, refer to the “Summary Table of the Digital Registers” on page 312.

Data and Control Registers

The following table summarizes the Data and Control registers, by function type, for the digital blocks.

Table 17-10. Digital Block Data and Control Register Definitions

Function Type	DR0		DR1		DR2		CR0		CR1	
	Function	Access	Function	Access	Function	Access	Function	Access	Function	Access
Timer	Down Counter	R *	Period	W	Capture/Compare	RW	Control	RW	Control	RW
Counter	Down Counter	R *	Period	W	Compare	RW	Control	RW	Control	RW
Dead Band	Down Counter	R *	Period	W	N/A	N/A	Control	RW	Control	RW
PWMDBL	Down Counter	R *	Period	W	Compare	RW	Control	RW	Control	RW
CRCPRS	LFSR	R *	Polynomial	W	Seed	RW	Control	RW	Control	RW
SPIM	Shifter	N/A	TX Buffer	W	RX Buffer	R	Control/Status	RW **	Control	RW
SPIS	Shifter	N/A	TX Buffer	W	RX Buffer	R	Control/Status	RW **	Control	RW
TXUART	Shifter	N/A	TX Buffer	W	N/A	N/A	Control/Status	RW **	N/A	N/A
RXUART	Shifter	N/A	N/A	N/A	RX Buffer	R	Control/Status	RW **	N/A	N/A
DSM	Subtract	R *	Init-Phase	W	Density	RW	Control	RW	Control	RW

LEGEND

* In Timer, Counter, Dead Band, CRCPRS, PWMDBL, and DSM functions, a read of the DR0 register returns 00h and transfers DR0 to DR2.

** In the Communications functions, control bits are read/write accessible and status bits are read only accessible.

17.2.1 DxCxxDRx Registers

Add.	Name	Rows	Bit 7	Bit 6	Bit 5	Bit 4	Bit 3	Bit 2	Bit 1	Bit 0	Access
0,xxh	DxCxxDR0	3, 2	Data[7:0]								# : 00
0,xxh	DxCxxDR1	3, 2	Data[7:0]								W : 00
0,xxh	DxCxxDR2	3, 2	Data[7:0]								# : 00

LEGEND
Access is bit specific. Refer to the register detail for additional information.
xx An "x" after the comma in the address field indicates that there are multiple instances of the register. For an expanded address listing of these registers, refer to the "Digital Register Summary" on page 312.

The DxCxxDRx Registers are the digital blocks' Data registers.

Bits 7 to 0: Data[7:0]. The Data registers and bits presented in this section encompass the DxCxxDR0, DxCxxDR1, and DxCxxDR2 registers. They are discussed according to which bank they are located in and then detailed in the tables that follow by function type.

For additional information, refer to the Register Details chapter for the following registers:

- DxCxxDR0 register on page 131.
- DxCxxDR1 register on page 132.
- DxCxxDR2 register on page 133.

17.2.1.1 Timer Register Definitions

There are three 8-bit Data registers and two 8-bit Control registers. Table 17-11 explains the meaning of the data registers in the context of timer operation. The Control registers are described beginning with section 17.2.2 DxCxxCR0 Register.

Note DR2 is not writeable when the Timer is enabled.

Table 17-11. Timer Data Register Descriptions

Name	Function	Description
DR0	Count Value	Not directly readable or writeable. During normal operation, DR0 stores the current count of a synchronous down counter. When disabled, a write to the DR1 period register is also simultaneously loaded into DR0 from the data bus. In KILL-Reload mode DR1 period data is loaded into DR0 at each rising edge of block clock when KILL is asserted. When disabled, a read of DR0 returns 00h to the data bus and transfers the contents of DR0 to DR2. This transfer only occurs in the addressed block. When enabled, a read of DR0 returns 00h to the data bus and synchronously transfers the contents of DR0 to DR2. It operates simultaneously on the byte addressed and all higher bytes in a multi-block timer. Note that when the hardware capture input is high, the read of DR0 (software capture) will be masked and will not occur. The hardware capture input must be low for a software capture to occur.
DR1	Period	Write only register. Data in this register sets the period of the count. The actual number of clocks counted is Period + 1. In the default one-half cycle Terminal Count mode (TC), a period value of 00h results in the primary output to be the inversion of the input clock. In the optional full cycle TC mode, a period of 00h gives a constant logic high on the primary output. When disabled, a write to this register also transfers the period value directly into DR0. When enabled, if the block frequency is 24 MHz or below, this register may be written to at any time, but the period will only be reloaded into DR0 in the clock following a TC. If the block frequency is 48 MHz, the Terminal Count or Compare Interrupt should be used to synchronize the new period register write; otherwise, the counter can be incorrectly loaded.
DR2	Capture/ Compare	Read write register (see **Exception** below). DR2 has multiple functions in a timer configuration. It is typically used as a capture register, but it also functions as a compare register. When enabled and a capture event occurs, the current count in DR0 is synchronously transferred into DR2. When enabled, the compare output is computed using the compare type (set in the function register mode bits) between DR0 and DR2. The result of the compare is output to the Auxiliary output. When disabled, a read of DR0 transfers the contents of DR0 into DR2 for the addressed block only. **Exception**: When enabled, DR2 is not writeable.

17.2.1.2 Counter Register Definitions

There are three 8-bit Data registers and two Control registers (a 7 bit and an 8 bit). Table 17-12 explains the meaning of these registers in the context of the Counter operation. Note that the descriptions of the registers are dependent on the enable/disable state of the block. This behavior is only related to the enable bit in the Control register, not the data input that provides the counter gate (unless otherwise noted). The Control registers are described beginning with section 17.2.2 DxCxxCR0 Register.

Note DR0 may only be read (to transfer DR0 data to DR2) when the block is disabled.

Table 17-12. Counter Data Register Descriptions

Name	Function	Description
DR0	Count Value	Not directly readable or writeable. During normal operation, DR0 stores the current count of a synchronous down counter. When disabled, a write to the DR1 period register is also simultaneously loaded into DR0 from the data bus. In KILL-Reload mode DR1 period data is loaded into DR0 at each rising edge of block clock when KILL is asserted. When disabled or the data input (counter gate) is low, a read of DR0 returns 00h to the data bus and transfers the contents of DR0 to DR2. This register should not be read when the counter is enabled and counting.
DR1	Period	Write only register. Data in this register sets the period of the count. The actual number of clocks counted is Period + 1. A period of 00h gives a constant logic high on the auxiliary output. When disabled, a write to this register also transfers the period value directly into DR0. When enabled, if the block frequency is 24 MHz or below, this register may be written to at any time, but the period will only be reloaded into DR0 in the clock following a TC. If the block frequency is 48 MHz, the Terminal Count or Compare Interrupt should be used to synchronize the new period register write; otherwise, the counter can be incorrectly loaded.
DR2	Compare	Read write register. DR2 functions as a Compare register. When enabled, the compare output is computed using the compare type (set in the function register mode bits) between DR0 and DR2. The result of the compare is output to the primary output. When disabled or the data input (counter gate) is low, a read of DR0 will transfer the contents of DR0 into DR2. DR2 may be written to when the function is enabled or disabled. In DR2-buffer mode in counter running, the data written to DR2 is stored first, then transferred to DR2 register when DR0 is being reloaded.

17.2.1.3 Dead Band Register Definitions

There are three 8-bit Data registers and a 3-bit Control register. Table 17-13 explains the meaning of these registers in the context of Dead Band operation. The Control registers are described beginning with section 17.2.2 DxCxxCR0 Register.

Note DR0 may only be read (to transfer DR0 data to DR2) when the block is disabled.

Table 17-13. Dead Band Register Descriptions

Name	Function	Description
DR0	Count Value	Not directly readable or writeable. During normal operation, DR0 stores the current count of a synchronous down counter. When disabled, a write to the DR1 period register is also simultaneously loaded into DR0 from the data bus. When disabled, a read of DR0 returns 00h to the data bus and transfers the contents of DR0 to DR2.
DR1	Period	Write only register. Data in this register sets the period of the dead band count. The actual number of clocks counted is Period + 1. The minimum period value is 00h, which sets a dead band time of one clock. When disabled, a write to this register also transfers the period value directly into DR0. When enabled, if the block frequency is 24 MHz or below, this register may be written to at any time, but the period will only be reloaded into DR0 in the clock following a Terminal Count (TC). If the block frequency is 48 MHz, the Terminal Count or Compare Interrupt should be used to synchronize the new period register write; otherwise, the counter can be incorrectly loaded.
DR2	Buffer	When disabled, a read of DR0 transfers the contents of DR0 into DR2.

17.2.1.4 PWMDBL Register Definitions

There are three 8-bit Data registers and two Control registers (a 7-bit and an 8-bit). Table 17-14 explains the meaning of these registers in the context of the PWMDBL operation. The Control registers are described beginning with section 17.2.2 DxCxxCR0 Register.

Note Read DR0 (to transfer DR0 data to DR2) only when the block is disabled.

Table 17-14. PWMDBL Data Register Descriptions

Name	Function	Description
DR0	Count Value	Not directly readable or writeable. During normal operation, DR0 stores the current count of a synchronous down counter. When disabled, a write to the DR1 period register is also simultaneously loaded into DR0 from the data bus. When disabled, a read of DR0 returns 00h to the data bus and transfers the contents of DR0 to DR2. This register should not be read when the counter is enabled and counting.
DR1	Period	Write only register. Data in this register sets the period of the count. The actual number of clocks counted is Period + 1. A period of 00h gives a constant logic high on the auxiliary output. When disabled, a write to this register also transfers the period value directly into DR0. When enabled, if the block frequency is 24 MHz or below, this register may be written to at any time, but the period will only be reloaded into DR0 in the clock following a TC. If the block frequency is 48 MHz, the Terminal Count or Compare Interrupt should be used to synchronize the new period register write; otherwise, the counter can be incorrectly loaded.
DR2	Compare	Read write register. DR2 functions as a Compare register. When enabled, the compare output is computed using the compare type (set in the function register mode bits) between DR0 and DR2. The result of the compare is output to the primary output. When disabled, a read of DR0 will transfer the contents of DR0 into DR2. DR2 may be written to when the function is enabled or disabled. When counter is running, the data written to DR2 is stored first, then transferred to DR2 register when DR0 is being reloaded.

17.2.1.5 CRCPRS Register Definitions

There are three 8-bit Data registers and two Control registers (a 7-bit and an 8-bit). Table 17-15 explains the meaning of these registers in the context of CRCPRS operation. Note that in the CRCPRS function a write to the DR2 Seed register is also loaded simultaneously into DR0. The Control registers are described beginning with section 17.2.2 DxCxxCR0 Register.

Table 17-15. CRCPRS Register Descriptions

Name	Function	Description
DR0	LFSR	Not directly readable or writeable. During normal operation, DR0 stores the state of a synchronous Linear Feedback Shift register. When disabled, a write to the DR2 Seed register is also simultaneously loaded into DR0 from the data bus. In KILL-Reload mode DR2 seed data is loaded into DR0 at each rising edge of block clock when KILL is asserted. When disabled, a read of DR0 returns 00h to the data bus and transfers the contents of DR0 to DR2. This register should not be read while the block is enabled.
DR1	Polynomial	Write only register. Data in this register sets the polynomial for the CRC or PRS function. **Exception**: This register must only be written when the block is disabled.
DR2	Seed/Residue	Read write register. DR2 functions as a Seed and Residue register. When disabled, a write to this register also transfers the seed value directly into DR0. When enabled, DR2 may be written to at any time. The value written will be used in the Compare function. When enabled, the compare output is computed using the compare type (set in the function register mode bits) between DR0 and DR2. The result of the compare is output to the auxiliary output. When disabled, a read of DR0 will transfer the contents of DR0 into DR2. This feature can be used to read out the residue, after a CRC operation is complete.

17.2.1.6 SPI Master Register Definitions

There are three 8-bit Data registers and two Control/Status registers (an 8-bit and a 7-bit). Table 17-16 explains the meaning of these registers in the context of SPIM operation. The Control registers are described beginning with section 17.2.2 DxCxxCR0 Register.

Table 17-16. SPIM Data Register Descriptions

Name	Function	Description
DR0	Shifter	Not readable or writeable. During normal operation, DR0 implements a Shift register for shifting serial data.
DR1	TX Buffer	Write only register. If no transmission is in progress and this register is written to, the data from this register (DR1) is loaded into the Shift register (DR0), on the following clock edge, and a transmission is initiated. If a transmission is currently in progress, this register serves as a buffer for TX data. This register should only be written to when TX Reg Empty status is set, and this write clears the TX Reg Empty status bit in the Control register. When the data is transferred from this register (DR1) to the Shift register (DR0), then TX Reg Empty status is set.
DR2	RX Buffer	Read only register. When a byte transmission/reception is complete, the data in the shifter (DR0) is transferred into the RX Buffer register and RX Reg Full status in the Control register is set. A read from this register (DR2) clears the RX Reg Full status bit in the Control register.

17.2.1.7 SPI Slave Register Definitions

There are three 8-bit Data registers and two Control/Status registers (an 8-bit and a 7-bit). Table 17-17 explains the meaning of these registers in the context of SPIS operation. The Control registers are described beginning with section 17.2.2 DxCxxCR0 Register.

Table 17-17. SPIS Data Register Descriptions

Name	Function	Description
DR0	Shifter	Not readable or writeable. During normal operation, DR0 implements a Shift register for shifting serial data.
DR1	TX Buffer	Write only register. This register should only be written to when TX Reg Empty status is set and the write clears the TX Reg Empty status bit in the Control register. When the data is transferred from this register (DR1) to the Shift register (DR0), then TX Reg Empty status is set.
DR2	RX Buffer	Read only register. When a byte transmission/reception is complete, the data in the shifter (DR0) is transferred into the RX Buffer register and RX Reg Full status in the Control (CR0) register is set. A read from this register (DR2) clears the RX Reg Full status bit in the Control register.

17.2.1.8 Transmitter Register Definitions

There are three 8-bit Data registers and one 5-bit Control/Status register. Table 17-18 explains the meaning of these registers in the context of Transmitter operation. The Control registers are described beginning with section 17.2.2 DxCxxCR0 Register.

Table 17-18. Transmitter Data Register Descriptions

Name	Function	Description
DR0	Shifter	Not readable or writeable. During normal operation, DR0 implements a shift register for shifting out serial data.
DR1	TX Buffer	Write only register. If no transmission is in progress and this register is written to, subject to the setup time requirement, the data from this register (DR1) is loaded into the Shift register (DR0) on the following clock edge and a transmission is initiated. If a transmission is currently in progress, this register serves as a buffer for TX data. This register should only be written to when TX Reg Empty status is set and this write clears the TX Reg Empty status bit in the Control (CR0) register. When the data is transferred from this register (DR1) to the Shift register (DR0), then TX Reg Empty status is set.
DR2	NA	Not used in this function.

17.2.1.9 Receiver Register Definitions

There are three 8-bit Data registers and one 8-bit Control/Status register. Table 17-19 explains the meaning of these registers in the context of Receiver operation. The Control registers are described beginning with section 17.2.2 DxCxxCR0 Register.

Table 17-19. Receiver Data Register Descriptions

Name	Function	Description
DR0	Shifter	Not readable or writeable. During normal operation, DR0 implements a Shift register for shifting in serial data from the RXD input.
DR1	NA	Not used in this function.
DR2	RX Buffer	Read only register. After eight bits of data are received, the contents of the shifter (DR0) is transferred into the RX Buffer register and the RX Reg Full status is set. The RX Reg Full status bit in the Control register is cleared when this register is read.

17.2.1.10 DSM Register Definitions

There are three 8-bit Data registers and two Control registers (a 5-bit and a 2-bit). Table 17-20 explains the meaning of these registers in the context of DSM operation. The Control registers are described beginning with section 17.2.2 DxCxxCR0 Register.

Table 17-20. DSM Data Register Descriptions

Name	Function	Description
DR0	Difference	Not directly readable or writeable. During normal operation, DR0 stores the current value of a synchronous subtracter. When disabled, a write to the DR1 initial minuend register is also simultaneously loaded into DR0 from the data bus. When disabled, a read of DR0 returns 00h to the data bus and transfers the contents of DR0 to DR2. This register should not be read when the subtracter is enabled.
DR1	Initial phase	Write only register. Data in this register sets the initial data of the subtracter. DR1 may only be written to when the function is disabled. When disabled, a write to this register also transfers the initial value directly into DR0.
DR2	Density Value	Read write register. DR2 functions as a subtrahend register. When enabled, DR0 = DR0 – DR2 is performed. The carry out is outputted to the auxiliary output. When disabled, a read of DR0 will transfer the contents of DR0 into DR2. DR2 may be written to when the function is enabled or disabled. When enabled, if the block frequency is 24 MHz or below, this register may be written to at any time, If the block frequency is 48 MHz, the DSM function should be disabled first.

17.2.2 DxCxxCR0 Register

The DxCxxCR0 Registers are the digital blocks' Control registers.

Add.	Name	Rows	Bit 7	Bit 6	Bit 5	Bit 4	Bit 3	Bit 2	Bit 1	Bit 0	Access
0,xxh	DxCxxCR0 (Timer Control:000)	3, 2	KILL[3:0]				NPS	TC Pulse Width	Capture Int	Enable	RW : 00

LEGEND
xx An "x" after the comma in the address field indicates that there are multiple instances of the register. For an expanded address listing of these registers, refer to the "Digital Register Summary" on page 312.

Bits 7 to 1: The bits for this register are described by function in Table 17-21.

For a complete description of bit functionality, refer to the DxCxxCR0 (Timer Control:000) register on page 134.

Bit 0: Enable. This bit is used to synchronously enable or disable the programmed function.

Add.	Name	Rows	Bit 7	Bit 6	Bit 5	Bit 4	Bit 3	Bit 2	Bit 1	Bit 0	Access
0,xxh	DxCxxCR0 (Counter Control:001)	3, 2	KILL[3:0]				NPS		DR2BufEN	Enable	RW : 00

LEGEND
xx An “x” after the comma in the address field indicates that there are multiple instances of the register. For an expanded address listing of these registers, refer to the “Digital Register Summary” on page 312.

Bits 7 to 1: The bits for this register are described by function in Table 17-21.

Bit 0: Enable. This bit is used to synchronously enable or disable the programmed function.

For a complete description of bit functionality, refer to the DxCxxCR0 (Counter Control:001) register on page 135.

Add.	Name	Rows	Bit 7	Bit 6	Bit 5	Bit 4	Bit 3	Bit 2	Bit 1	Bit 0	Access
0,xxh	DxCxxCR0 (CRCPRS Control:010)	3, 2	KILL[3:0]					Shift Mode	Pass Mode	Enable	RW : 00

LEGEND
xx An “x” after the comma in the address field indicates that there are multiple instances of the register. For an expanded address listing of these registers, refer to the “Digital Register Summary” on page 312.

Bits 7 to 1: The bits for this register are described by function in Table 17-21.

Bit 0: Enable. This bit is used to synchronously enable or disable the programmed function.

For a complete description of bit functionality, refer to the DxCxxCR0 (CRCPRS Control:010) register on page 137.

Add.	Name	Rows	Bit 7	Bit 6	Bit 5	Bit 4	Bit 3	Bit 2	Bit 1	Bit 0	Access
0,xxh	DxCxxCR0 (PWMDBL Control:011)	3, 2	KILL[3:0]				NPS	KILL_INT	SWT	Enable	RW : 00

LEGEND
xx An “x” after the comma in the address field indicates that there are multiple instances of the register. For an expanded address listing of these registers, refer to the “Digital Register Summary” on page 312.

Bits 7 to 1: The bits for this register are described by function in Table 17-21.

Bit 0: Enable. This bit is used to synchronously enable or disable the programmed function.

For a complete description of bit functionality, refer to the DxCxxCR0 (PWMDBL Control:011) register on page 138.

Add.	Name	Rows	Bit 7	Bit 6	Bit 5	Bit 4	Bit 3	Bit 2	Bit 1	Bit 0	Access
0,xxh	DxCxxCR0 (Dead Band Control:100)	3, 21						Bit Bang Clock	Bit Bang Mode	Enable	RW : 00

LEGEND
xx An “x” after the comma in the address field indicates that there are multiple instances of the register. For an expanded address listing of these registers, refer to the “Digital Register Summary” on page 312.

Bits 7 to 1: The bits for this register are described by function in Table 17-21.

Bit 0: Enable. This bit is used to synchronously enable or disable the programmed function.

For a complete description of bit functionality, refer to the DxCxxCR0 (Dead Band Control:100) register on page 136.

Add.	Name	Rows	Bit 7	Bit 6	Bit 5	Bit 4	Bit 3	Bit 2	Bit 1	Bit 0	Access
0,xxh	DCCxxCR0 (SPIM Control:0-110)	4, 3, 2, 1	LSb First	Overrun	SPI Complete	TX Reg Empty	RX Reg Full	Clock Phase	Clock Polarity	Enable	# : 00

LEGEND
Access is bit specific. Refer to the register detail for additional information.
xx An “x” after the comma in the address field indicates that there are multiple instances of the register. For an expanded address listing of these registers, refer to the “Digital Register Summary” on page 312.

Bits 7 to 1: The bits for this register are described by function in Table 17-21.

Bit 0: Enable. This bit is used to synchronously enable or disable the programmed function.

For a complete description of bit functionality, refer to the DCCxxCR0 (SPIM Control:0-110) register on page 140.

Add.	Name	Rows	Bit 7	Bit 6	Bit 5	Bit 4	Bit 3	Bit 2	Bit 1	Bit 0	Access
0,xxh	DCCxxCR0 (SPIS Control:1-110)	4, 3, 2, 1	LSb First	Overrun	SPI Complete	TX Reg Empty	RX Reg Full	Clock Phase	Clock Polarity	Enable	# : 00

LEGEND
Access is bit specific. Refer to the register detail for additional information.
xx An “x” after the comma in the address field indicates that there are multiple instances of the register. For an expanded address listing of these registers, refer to the “Digital Register Summary” on page 312.

Bits 7 to 1: The bits for this register are described by function in Table 17-21.

Bit 0: Enable. This bit is used to synchronously enable or disable the programmed function.

For a complete description of bit functionality, refer to the DCCxxCR0 (SPIS Control:1-110) register on page 141.

Add.	Name	Rows	Bit 7	Bit 6	Bit 5	Bit 4	Bit 3	Bit 2	Bit 1	Bit 0	Access
0,xxh	DCCxxCR0 (UART Transmitter Control)	3, 2,			TX Complete	TX Reg Empty		Parity Type	Parity Enable	Enable	# : 00

LEGEND
Access is bit specific. Refer to the register detail for additional information.
xx An “x” after the comma in the address field indicates that there are multiple instances of the register. For an expanded address listing of these registers, refer to the “Digital Register Summary” on page 312.

Bits 7 to 1: The bits for this register are described by function in Table 17-21.

Bit 0: Enable. This bit is used to synchronously enable or disable the programmed function.

For a complete description of bit functionality, refer to the DCCxxCR0 (UART Transmitter Control) register on page 143.

Add.	Name	Rows	Bit 7	Bit 6	Bit 5	Bit 4	Bit 3	Bit 2	Bit 1	Bit 0	Access
0,xxh	DCCxxCR0 (UART Receiver Control)	3, 2	Parity Error	Overrun	Framing Error	RX Active	RX Reg Full	Parity Type	Parity Enable	Enable	# : 00

LEGEND
Access is bit specific. Refer to the register detail for additional information.
xx An “x” after the comma in the address field indicates that there are multiple instances of the register. For an expanded address listing of these registers, refer to the “Digital Register Summary” on page 312.

Bits 7 to 1: The bits for this register are described by function in Table 17-21.

Bit 0: Enable. This bit is used to synchronously enable or disable the programmed function.

For a complete description of bit functionality, refer to the DCCxxCR0 (UART Receiver Control) register on page 144.

Add.	Name	Rows	Bit 7	Bit 6	Bit 5	Bit 4	Bit 3	Bit 2	Bit 1	Bit 0	Access
0,xxh	DxCxxCR0 (DSM Control:111)	3, 2	KILL_SEL[3:0]							Enable	RW : 00

LEGEND
xx An “x” after the comma in the address field indicates that there are multiple instances of the register. For an expanded address listing of these registers, refer to the “Digital Register Summary” on page 312.

Bits 7 to 1: The bits for this register are described by function in Table 17-21.

Bit 0: Enable. This bit is used to synchronously enable or disable the programmed function.

For a complete description of bit functionality, refer to the DxCxxCR0 (DSM Control:111) register on page 142.

Table 17-21. DxCxxCR0 Control Register Descriptions

Function	Description
Timer	There are eight bits in the Control (CR0) register: one to enable the block, one to set the optional interrupt on capture, one to select between one-half and a full clock for Terminal Count (TC) output, one to select between extending or not extending compare output half cycle, and four bits for KILL signal selection.
Counter	There are eight bits in the Control (CR0) register: one to enable the block, one to enable DR2 update buffer, one to select between extending or not extending compare output half cycle, and four bits for KILL signal selection.
Dead Band	There are three bits in the Control (CR0) register: one bit to enable the block, and two bits to enable and control Dead Band Bit Bang mode. When Bit Bang mode is enabled, the output of this register is substituted for the PWM reference. This register may be toggled by user firmware, to generate PHI1 and PHI2 output clock with the programmed dead time. The options for Bit Bang mode are as follows: 0 Function uses the previous clock primary output as the input reference. 1 Function uses the Bit Bang Clock register as the input reference.
PWMDBL	There are seven bits in the Control (CR0) register: one to enable the block, one to set software trigger mode, one to select between extending or not extending compare output half cycle, and four bits for START signal selection. **Note** The PWMDBL function does not support NPS mode when integrated dead band function is enabled.
CRCPRS	There are seven bits in the Control (CR0) register: one to enable the block, one for bypass mode, one for shift mode, and four bits for KILL signal selection.
SPIM	The SPI Control (CR0) register contains both control and status bits. There are four control bits that are read/write: Enable, Clock Phase and Clock Polarity to set the mode, and LSb First which controls bit ordering. There are two read only status bits: Overrun and SPI Complete. There are two additional read only status bits to indicate TX and RX Buffer status.
SPIS	The SPI Control (CR0) register contains both control and status bits. There are four control bits that are read/write: Enable, Clock Phase and Clock Polarity to set the mode, and LSb First which controls bit ordering. There are two read only status bits: Overrun and SPI Complete. There are two additional read only status bits to indicate TX and RX Buffer status.
TXUART	The Transmitter Control (CR0) register contains three control bits and two status bits. The control bits are Enable, Parity Enable, and Parity Type, and have read/write access. The status bits, TX Reg Empty and TX Complete, are read only.
RXUART	The Receiver Control (CR0) register contains both control and status bits. The three control bits are read/write: Enable, Parity Enable, and Parity Type. There are five read only status bits: RX Reg Full, RX Active, Framing Error, Overrun, and Parity Error.
DSM	There are five bits in the Control (CR0) register: one to enable the block, and four bits for KILL signal selection.

17.2.3 DxCxxCR1 Register

The DxCxxCR1 registers are the digital blocks' Control registers (located in bank 1 of the PSoC device's memory map).

The bits for the following registers are described by function in Table 17-22.

Add.	Name	Rows	Bit 7	Bit 6	Bit 5	Bit 4	Bit 3	Bit 2	Bit 1	Bit 0	Access
1,xxh	DxCxxCR1 (Timer Control:000)	3, 2	Multi-Shot				KILL_INV	KILL_MD[1:0]		KILL_INT	RW : 00

LEGEND
xx An "x" after the comma in the address field indicates that there are multiple instances of the register. For an expanded address listing of these registers, refer to the "Digital Register Summary" on page 312.

For a complete description of bit functionality, refer to the DxCxxCR1 (Timer Control:000) register on page 228.

Add.	Name	Rows	Bit 7	Bit 6	Bit 5	Bit 4	Bit 3	Bit 2	Bit 1	Bit 0	Access
1,xxh	DxCxxCR1 (Counter Control:001)	3, 2	Multi-Shot				KILL_INV	KILL_MD[1:0]		KILL_INT	RW : 00

LEGEND
xx An "x" after the comma in the address field indicates that there are multiple instances of the register. For an expanded address listing of these registers, refer to the "Digital Register Summary" on page 312.

For a complete description of bit functionality, refer to the DxCxxCR1 (Counter Control:001) register on page 229.

Add.	Name	Rows	Bit 7	Bit 6	Bit 5	Bit 4	Bit 3	Bit 2	Bit 1	Bit 0	Access
1,xxh	DxCxxCR1 (CRCPRS Control:010)	3, 2	Multi-Shot				KILL_INV	KILL_MD[1:0]		KILL_INT	RW : 00

LEGEND
xx An "x" after the comma in the address field indicates that there are multiple instances of the register. For an expanded address listing of these registers, refer to the "Digital Register Summary" on page 312.

For a complete description of bit functionality, refer to the DxCxxCR1 (CRCPRS Control:010) register on page 230.

Add.	Name	Rows	Bit 7	Bit 6	Bit 5	Bit 4	Bit 3	Bit 2	Bit 1	Bit 0	Access
1,xxh	DxCxxCR1 (PWMDBL Control:011)	3, 2	Multi-Shot				STARTINV	DBW[2:0]			RW : 00

LEGEND
xx An "x" after the comma in the address field indicates that there are multiple instances of the register. For an expanded address listing of these registers, refer to the "Digital Register Summary" on page 312.

For a complete description of bit functionality, refer to the DxCxxCR1 (PWMDBL Control:011) register on page 231.

Add.	Name	Rows	Bit 7	Bit 6	Bit 5	Bit 4	Bit 3	Bit 2	Bit 1	Bit 0	Access
1,xxh	DxCxxCR1 (Dead Band Control:100)	3, 2								KILL_INT	RW : 00

LEGEND
xx An "x" after the comma in the address field indicates that there are multiple instances of the register. For an expanded address listing of these registers, refer to the "Digital Register Summary" on page 312.

For a complete description of bit functionality, refer to the DxCxxCR1 (Dead Band Control:100) register on page 232.

Add.	Name	Rows	Bit 7	Bit 6	Bit 5	Bit 4	Bit 3	Bit 2	Bit 1	Bit 0	Access
1,xxh	DxCxxCR1 (SPIM Control:0-110)	3, 2	Chain	LSB		SPI Length					RW : 00

LEGEND
xx An “x” after the comma in the address field indicates that there are multiple instances of the register. For an expanded address listing of these registers, refer to the “Digital Register Summary” on page 312.

For a complete description of bit functionality, refer to the DxCxxCR1 (SPIM Control:0-110) register on page 233.

Add.	Name	Rows	Bit 7	Bit 6	Bit 5	Bit 4	Bit 3	Bit 2	Bit 1	Bit 0	Access
1,xxh	DxCxxCR1 (SPIS Control:0-110)	3, 2	Chain	LSB		SPI Length					RW : 00

LEGEND
xx An “x” after the comma in the address field indicates that there are multiple instances of the register. For an expanded address listing of these registers, refer to the “Digital Register Summary” on page 312.

For a complete description of bit functionality, refer to the DxCxxCR1 (SPIS Control:0-110) register on page 234.

Add.	Name	Rows	Bit 7	Bit 6	Bit 5	Bit 4	Bit 3	Bit 2	Bit 1	Bit 0	Access
1,xxh	DxCxxCR1 (DSM Control:111)	3, 2					KILL_INV			KILL_INT	RW : 00

LEGEND
xx An “x” after the comma in the address field indicates that there are multiple instances of the register. For an expanded address listing of these registers, refer to the “Digital Register Summary” on page 312.

For a complete description of bit functionality, refer to the DxCxxCR1 (DSM Control:111) register on page 235.

Table 17-22. DxCxxCR1 Control Register Descriptions

Function	Description
Timer	There are 8 bits in the Control (CR1) register: one for KILL interrupt select, two to select KILL mode, one to decide whether invert KILL signal, and four to set multi-shot times.
Counter	There are 8 bits in the Control (CR1) register: one for KILL interrupt select, two to select KILL mode, one to decide whether invert KILL signal, and four to set multi-shot times.
Dead Band	There is 1 bit in the CR1 register for KILL interrupt select.
PWMDBL	There are 8 bits in the Control (CR1) register: three for dead band width selection, one to decide whether invert START signal, and four to set multi-shot times.
CRCPRS	There are 8 bits in the Control (CR1) register: one for KILL interrupt select, two to select KILL mode, one to decide whether invert KILL signal, and four to set multi-shot times.
SPIM	There are 7 bits in the Control (CR1) register: five to set SPI length, one to set whether it is LSB block, and one to set it is chained block.
SPIS	There are 7 bits in the Control (CR1) register: five to set SPI length, one to set whether it is LSB block, and one to set it is chained block.
TXUART	N/A
RXUART	N/A
DSM	There are 2 bits in the Control (CR1) register: one for KILL interrupt select, and one to decide whether invert KILL signal.

Interrupt Mask Registers

The following are the interrupt mask registers for the digital blocks.

17.2.4 INT_MSK1 Register

Add.	Name	Rows	Bit 7	Bit 6	Bit 5	Bit 4	Bit 3	Bit 2	Bit 1	Bit 0	Access
0,E1h	INT_MSK1	3, 2	DCC13	DCC12	DBC11	DBC10	DCC03	DCC02	DBC01	DBC00	RW : 00

The Interrupt Mask Register 1 (INT_MSK1) is used to enable the individual sources' ability to create pending interrupts for digital blocks.

Depending on the digital row configuration of your PSoC device, some bits may not be available in the INT_MSK1 register.

Bit 7: DCC13. Digital communications block interrupt enable for row 1 block 3.

Bit 6: DCC12. Digital communications block interrupt enable for row 1 block 2.

Bit 5: DBC11. Digital basic block interrupt enable for row 1 block 1.

Bit 4: DBC10. Digital basic block interrupt enable for row 1 block 0.

Bit 3: DCC03. Digital communications block interrupt enable for row 0 block 3.

Bit 2: DCC02. Digital communications block interrupt enable for row 0 block 2.

Bit 1: DBC01. Digital basic block interrupt enable for row 0 block 1.

Bit 0: DBC00. Digital basic block interrupt enable for row 0 block 0.

For additional information, refer to the INT_MSK1 register on page 209.

Configuration Registers

The configuration block contains 3 registers: Function (DxCxxFN), Input (DxCxxIN), and Output (DxCxxOU). The values in these registers should not be changed while the block is enabled. Note that the Digital Block Configuration registers are all located in bank 1 of the PSoC device's memory map.

17.2.5 DxCxxFN Registers

Add.	Name	Rows	Bit 7	Bit 6	Bit 5	Bit 4	Bit 3	Bit 2	Bit 1	Bit 0	Access
1,xxh	DxCxxFN	3, 2	Data Invert	BCEN	End Single	Mode[1:0]		Function[2:0]			RW : 00

LEGEND
xx An "x" after the comma in the address field indicates that there are multiple instances of the register. For an expanded address listing of these registers, refer to the "Digital Register Summary" on page 312.

The Digital Basic/Communications Type B Block Function Registers (DxCxxFN) contain the primary Mode and Function bits that determine the function of the block.

All bits in these registers are common to all functions, except those specified in Table 17-24.

Bit 7: Data Invert. This bit inverts the selected data input.

Bit 6: BCEN. This bit enables the primary output of the block, to drive the row broadcast block. The BCEN bit is set independently in each block; and therefore, care must be taken to ensure that only one BCEN bit, in a given row, is enabled. However, if any of the blocks in a given row have the BCEN bit set, the input that allows the broadcast net from other rows to drive the given row's broadcast net is disabled (see Figure 16-2 on page 328).

Bit 5: End Single. This bit is used to indicate the last or most significant block in a chainable function. This bit must also be set if the chainable function only consists of a single block.

Bits 4 and 3: Mode[1:0]. The mode bits select the options available for the selected function. These bits should only be changed when the block is disabled.

Bits 2 to 0: Function[2:0]. The function bits configure the block into one of the available block functions (six for the Comm block, four for the Basic block).

For additional information, refer to the DxCxxFN register on page 222.

Table 17-23. DxCxxFN Function Registers

[7]: Data Invert	1: Invert block's data input 0: Do not invert block's data input
[6]: BCEN	1: Enable 0: Disable
[5]: End Single	1: Block is not chained or is at the end of a chain 0: Block is at the start of or in the middle of a chain
[4:3]: Mode	Function specific
[2:0]: Function	000b: Timer 001b: Counter 010b: CRCPRS 011b: PWMDBL 100b: Dead band for PWM 101b: UART (DCCxx blocks only) 110b: SPI (DCCxx blocks only) 111b: DSM

Table 17-24. Digital Block Configuration Register Functional Descriptions

Function	Description
Timer	The mode bits in the Timer block control the Interrupt Type and the Compare Type.
Counter	The mode bits in the Counter block control the Interrupt Type and the Compare Type (same as the Timer function).
Dead Band	The mode bits are encoded as the kill type. See the table titled "Dead Band Kill Options" on page 340 for an explanation of Kill options.
PWMDBL	The mode bits are encoded as the kill type. It is identical to Dead Band function.
CRCPRS	The mode bits are encoded to determine the Compare type.
SPIM	Mode bit 1 selects interrupt type. Mode bit 0 selects master or slave (for SPIM, it is '0').
SPIS	Mode bit 1 selects interrupt type. Mode bit 0 selects master or slave (for SPIS, it is '1').
TXUART	Mode bit 0 selects between Transmitter and Receiver (in this case Mode bit 0 is set to '1' for TX) and Mode bit 1 selects the interrupt type.
RXUART	Mode bit 0 selects between Transmitter and Receiver (in this case Mode bit 0 is set to '0' for RX) and Mode bit 1 selects the interrupt type.
DSM	Mode bit 1 selects KILL mode. Mode bit 0 selects multiplication type.

17.2.6 DxCxxIN Registers

Add.	Name	Rows	Bit 7	Bit 6	Bit 5	Bit 4	Bit 3	Bit 2	Bit 1	Bit 0	Access
1,xxh	DxCxxIN	4, 3, 2, 1	Data Input[3:0]				Clock Input[3:0]				RW : 00

LEGEND
xx An “x” after the comma in the address field indicates that there are multiple instances of the register. For an expanded address listing of these registers, refer to the “Digital Register Summary” on page 312.

The Digital Basic/Communications Type B Block Input Registers (DxCxxIN) are used to select the data and clock inputs.

These registers are common to all functional types, except the SPIS. The SPIS is unique in that it has three function inputs and one function output defined. Refer to the DxCxxOU registers.

The input registers are eight bits and consist of two 4-bit fields to control each of the 16-to-1 Clock and Data input muxes. The meaning of these fields depends on the external clock and data connections, which is context specific. See Table 17-25.

Bits 7 to 4: Data Input[3:0]. These bits control the data input.

Bits 3 to 0: Clock Input[3:0]. These bits control the clock input.

Table 17-25. Digital Block Input Definitions

Function	Inputs		
	DATA	CLK	Auxiliary
Timer	Capture	CLK	N/A
Counter	Enable	CLK	N/A
Dead Band	Kill	CLK	Reference *
CRCPRS	Serial Data **	CLK	N/A
SPIM	MISO	CLK	N/A
SPIS	MOSI	SCLK	SS_
Transmitter	N/A	8X Baud CLK	N/A
Receiver	RXD	8X Baud CLK	N/A

* The Dead Band reference input does not use the auxiliary input mux. It is hardwired to be the primary output of the previous block.

** For CRC computation, the input data is a serial data stream synchronized to the clock. For PRS mode, this input should be forced to logic 0.

For additional information, refer to the DxCxxIN register on page 224.

17.2.7 DxCxxOU Registers

Add.	Name	Rows	Bit 7	Bit 6	Bit 5	Bit 4	Bit 3	Bit 2	Bit 1	Bit 0	Access
1,xxh	DxCxxOU	3, 2	AUXCLK		AUXEN	AUX IO Select[1:0]		OUTEN	Output Select[1:0]		RW : 00

LEGEND
xx An “x” after the comma in the address field indicates that there are multiple instances of the register. For an expanded address listing of these registers, refer to the “Digital Register Summary” on page 312.

The Digital Basic/Communications Type B Block Output Registers (DxCxxOU) are used to control the connection of digital block outputs to the available row interconnect and control clock resynchronization.

When the selected function is SPI Slave (SPIS), the AUXEN and AUX IO bits change meaning, and select the input source and control for the Slave Select (SS_) signal.

The Digital Block Output register is common to all functional types, except the SPIS. The SPIS function is unique in that it has three function inputs and one function output defined. When the Aux IO Enable bit is '0', the Aux IO Select bits are used to select one of four inputs from the auxiliary data input mux to drive the SS_ input. Alternatively, when the Aux IO Enable bit is a '1', the SS_ signal is driven directly from the value of the Aux IO Select[0] bit. Thus, the SS_ input can be controlled in firmware, eliminating the need to use an additional GPIO pin for this purpose. Regardless of how the SS_ bit is configured, a SPIS block has the auxiliary row output drivers forced off; and therefore, the auxiliary output is not available in this block.

The following table enumerates the Primary and Auxiliary outputs that are defined for a given block function. Most functions have two outputs defined (the exception is the SPI Slave, which has only one). One or both of these outputs can optionally be enabled for output. When output, these signals can be routed to other block inputs through row or global interconnect, or output to chip pins.

Table 17-26. Digital Block Output Definitions

Function	Outputs		
	Primary	Auxiliary	Interrupt
Timer	Terminal Count	Compare	Terminal Count or Last-shot or Compare True or Capture or KILL
Counter	Compare	Terminal Count	Terminal Count or Last-shot or Compare True or KILL
Dead Band	Phase 1	Phase 2	Phase 1 or KILL
PWMDBL	Phase 1	Phase 2	Phase 1 or KILL
CRCPRS	MSB	Compare	Compare or DS or KILL
SPIM	MOSI	SCLK	TX Reg Empty or SPI Complete
SPIS	MISO	N/A **	TX Reg Empty or SPI Complete
Transmitter	TXD	SCLK *	TX Reg Empty or TX Compete
Receiver	RXD	SCLK *	RX Reg Full
DSM	Multiplication	Density Signal	Density Signal or KILL

* The UART blocks generate an SPI mode 3 style clock that is only active during the data bits of a received or transmitted byte.

** In the SPIS, the field that is used to select the auxiliary output is used to control the auxiliary input to select the SS_.

Bits 7 and 6: AUXCLK. All digital block clock inputs must be resynchronized. The digital blocks have numerous selections for clocking. In addition to the system clocks such as VC1, VC2, and VC3, clocks generated by other digital blocks may be selected through row or global interconnect. To maintain the integrity of block timing, all clocks are resynchronized at the input to the digital block.

The two AUXCLK bits are used to enable the input clock resynchronization. When enabled, the input clock is resynchronized to the selected system clock, which occurs after the 16-to-1 multiplexing. The rules for selecting the value for this register are as follows:

- If the input clock is based on SYSCLK (for example, VC1, VC2, VC3 based on SYSCLK) or the output of other blocks whose clock source is based on SYSCLK, synchronize to SYSCLK.
- If the input clock is based on SYSCLKX2 (for example, VC3 based on SYSCLKX2) or another digital block clocked by SYSCLKX2, or a SYSCLKX2 based clock, synchronize to SYSCLKX2.
- If you want to clock the block at 24 MHz (SYSCLK), choose SYSCLK direct in the resynchronized bits (the 16-to-1 input clock selection is ignored).
- If you want to clock the block at 48 MHz (SYSCLKX2), choose SYSCLKX2 as the clock input selection and leave the resynchronized bits in bypass mode.

The following table summarizes the available selections of the AUXCLK bits.

Table 17-27. AUXCLK Bit Selections

Code	Description	Usage
00	Bypass	Use this selection only when SYSCLKX2 (48 MHz) is selected by the 16-to-1 clock multiplexer (see the DxCxxIN register).
01	Resynchronize to SYSCLK (24 MHz)	This is a typical selection. Use this setting for any SYSCLK-based clock: VC1, VC2, VC3 driven by SYSCLK, digital blocks with SYSCLK based source clocks, broadcast bus with source based on SYSCLK, row input and row outputs with source based on SYSCLK.
10	Resynchronize to SYSCLKX2 (48 MHz)	Use this setting for any SYSCLKX2-based clock: VC3 driven by SYSCLKX2, digital blocks with SYSCLKX2 based source clocks, broadcast bus with source based on SYSCLKX2, row input and row outputs with source based on SYSCLKX2.
11	SYSCLK Direct	Use this setting to clock the block directly using SYSCLK. Note that this setting is not strictly related to clock resynchronization: because SYSCLK cannot resynchronize itself, it allows a direct skew controlled SYSCLK source.

Note Selecting VC1/1 or VC2/1 (when VC1 is 1), or VC3/1 when the input is SYSCLK, or SYSCLKX2 is not allowed.

Bit 5: AUXEN. The AUXEN bit enables the Auxiliary output to be driven onto the selected row output. If the selected function is SPI Slave, the meaning of this bit is different. The SPI Slave does not have a defined Auxiliary output, so this bit is used, in conjunction with the AUX IO Select bits to control the Slave Select input signal (SS_). When this bit is set, the SS_ input is forced active; and therefore, ***routing*** SS_ from an input pin is unnecessary.

Bits 4 and 3: AUX IO Select[1:0]. These two bits select one (out of the four) row outputs to drive the Auxiliary output onto. In SPI Slave mode, these bits are used in conjunction with the AUXEN bit to control the Slave Select (SS_) signal. In this mode, these two bits are used to select one of four row inputs for use as SS_. If no SS_ is required in a given application, the AUXEN bit can be used to force the SS_ input active; and therefore, routing SS_ in through a Row Input is not required.

Bit 2: OUTEN. This bit enables the Primary output to be driven onto the selected row output.

Bits 1 and 0: Output Select[1:0]. These two bits indicate which of the four row outputs the Primary output will be driven onto.

For additional information, refer to the DxCxxOU register on page 226.

17.3 Timing Diagrams

The timing diagrams in this section are presented according to their functionality and are in the following order.

- "Timer Timing" on page 363
- "Counter Timing" on page 366
- "Dead Band Timing" on page 367
- "PWMDBL Timing" on page 369
- "CRCPRS Timing" on page 370
- "SPI Mode Timing" on page 370
- "SPIM Timing" on page 371
- "SPIS Timing" on page 374
- "Transmitter Timing" on page 377
- "Receiver Timing" on page 379
- "DSM Timing" on page 382

17.3.1 Timer Timing

Enable/Disable Operation. When the block is disabled, the clock is immediately gated low. All outputs are gated low, including the interrupt output. All internal states are reset to their configuration-specific reset states, except for DR0, DR1, and DR2 which are unaffected.

Terminal Count/Compare Operation. In the clock cycle following the count of 00h, the Terminal Count (TC) output is asserted. It is one-half cycle or a full cycle depending on the TC Pulse Width mode, as set in the block Control register. If this block stands alone or is the least significant block in a chain, the Carry Out (CO) signal is also asserted. If the period is set to 00h and the TC Pulse Width mode is one-half cycle, the output is the inversion of the input clock. The Compare (CMP) output will be asserted in the cycle following the compare true and will be negated one cycle after compare false.

Multi-shot Operation. A 4-bit multi-shot down counter is available to count shot times. This counter is loaded with the value of the multi-shot period register in CR1. The value is reloaded on the first block clock following the last shot, or when the multi-shot period is written in CR1. Reloading only occurs if the block is enabled.

In multi-shot mode, the last shot is generated at the rising edge of the block clock when the terminal count is 1 and the multi-shot counter is 1. DR0 is reloaded at this time as well. At the next falling edge of the block clock, the block enable bit is cleared.The multi-shot counter is not reloaded until the block is re-enabled.

Figure 17-9. Last-shot Generation and DR0/Multi-shot Counter Reloaded

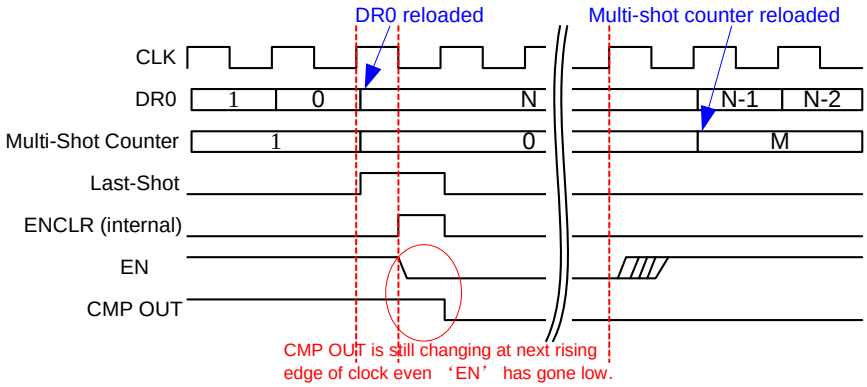

Figure 17-10. Last-shot meets IOW

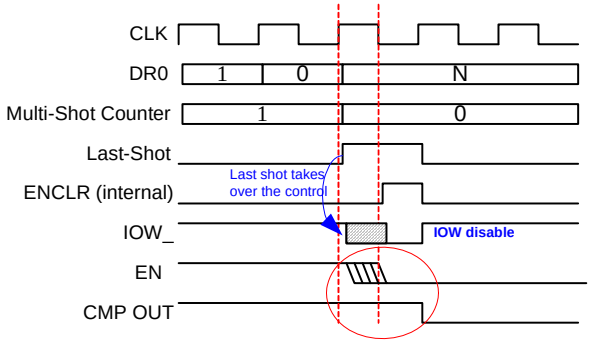

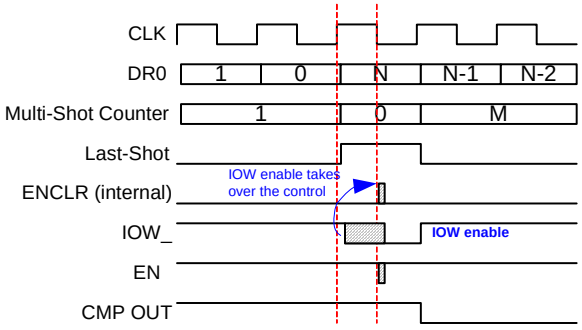

If the ENCLR and IOW enable occur simultaneously, the system IOW enable has higher priority. However if the ENCLR and IOW disable occur simultaneously, ENCLR takes over, shown as shown in Figure 17-10.

In the special case when DR1 is zero, the function is not in multi-shot mode, whether or not the multi-shot period register in CR1 is written zero. Therefore the minimal count period in multi-shot mode is two cycles.

KILL Disable Operation. In KILL-Disable mode, the KILL signal is first synchronized at the falling edge of SYSCLK, and then the synchronized KILL is used to clear EN bit. Synchronizing at the falling edge of SYSCLK allows for a safe timing window if an IOW enable follows the kill signal. Note that the block outputs are immediately asserted low at detection of a kill signal.

Figure 17-11. KILL-Disable and IOW Timing

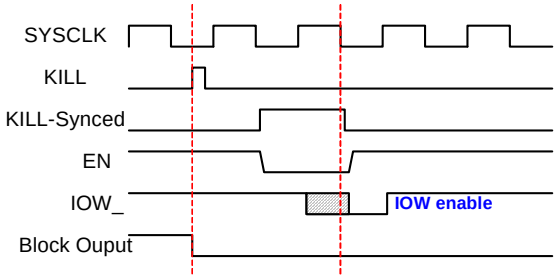

KILL Reload Operation. In KILL-Reload mode, the KILL signal is synchronized at the rising edge of block clock and is extended one block clock cycle. DR0 reloads at rising edge of the block clock when KILL-synced is high. The multi-shot counter reloading occurs at rising edge of the block clock after KILL-synced is released.

Figure 17-12. KILL-Reload Timing

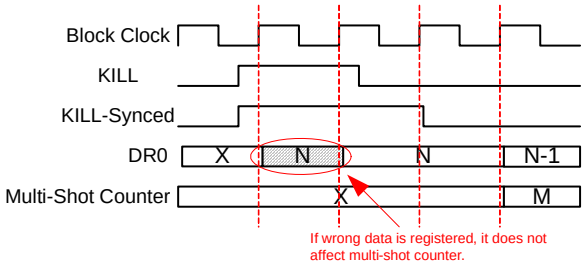

Multi-Block Terminal Count/Compare Operation. When timers are chained, the CO signal of a given block becomes the Carry In (CI) of the next most significant block in the chain. In a chained timer, the CO output indicates that the block and all lower blocks are at 00h count. The CO is set up to the next positive edge of the clock, to enable the next higher block to count once for every Terminal Count (TC) of all lower blocks.

The terminal count out of a given block becomes the terminal count in of the next least significant block in the chain. The terminal count output indicates that the block and all higher blocks are at 00h count. The terminal count in/terminal count out chaining signals provide a way for the lower blocks to know when the upper blocks are at TC. Reload occurs when all blocks are at TC, which can be determined by CI, terminal count in, and the block zero detect. Example timing for a three block timer is shown in Figure 17-13.

The compare circuit compares registers DR0 <= DR2. (When Mode[1] = 1, the comparison is DR0 < DR2.)

Each block has an internal compare condition (DR0 compared to DR2), a chaining signal to the next block called CMPO, and the chaining signal from the previous block called CMPI. In any given block of a timer, the CMPO is used to generate the auxiliary output (primary output in the counter) with a one cycle clock delay.

Figure 17-13. Multi-Block Timing

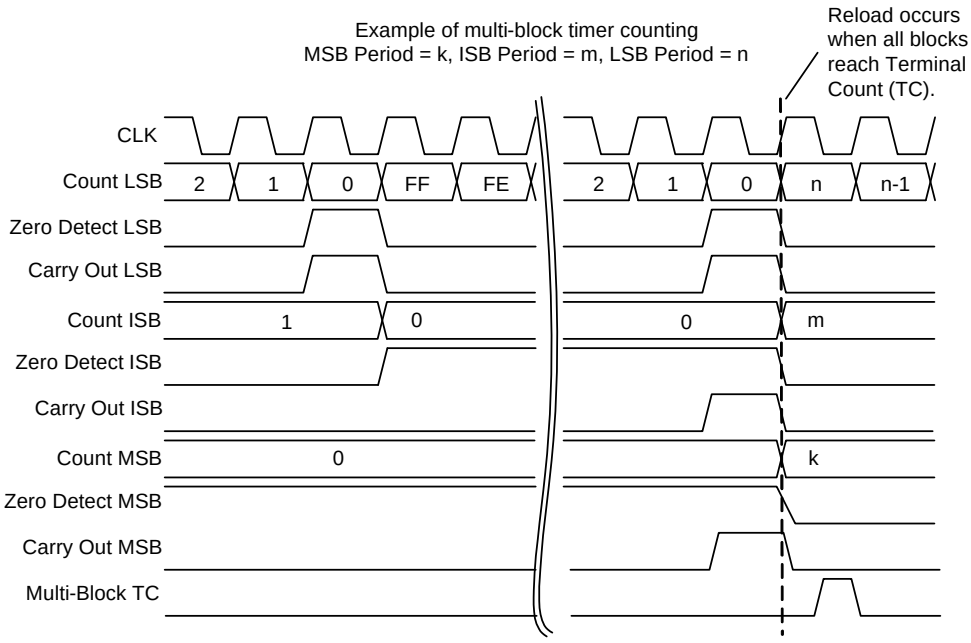

CMPO is generated from a combination of the internal compare condition and the CMPI input using the following rules:

1. For any given block, if DR0 < DR2, the CMPO condition is unconditionally asserted.
2. For any given block, if DR0 == DR2, CMPO is asserted only if the CMPI input to that block is asserted.
3. If the block is a start block, the effective CMPI depends on the compare type. If it is DR0 <= DR2, the effective CMPI input is '1'. If it is DR0 < DR2, the effective input is '0'.

Capture Operation. In the timer implementation, a rising edge of the data input or a CPU read of DR0 triggers a synchronous capture event. The result of this is to generate a latch enable to DR2 that loads the current count from DR0 into DR2. The latch enable signal is synchronized in such a way that it is not closing near an edge on which the count is changing.

A limitation is that capture will not work with the block clock of 48 MHz. (A fundamental limitation to Timer Capture operation is the fact the GPIO inputs are currently synchronized to the 24 MHz system clock).

KILL Interrupt Generation . KILL interrupt occurs when the function is enabled. Therefore no interrupt occurs if the KILL is already high in KILL-Disable mode when you write the function control register to be enabled. This is due to the function not being enabled due to KILL assertion.

Figure 17-14. Timer KILL Interrupt Generation

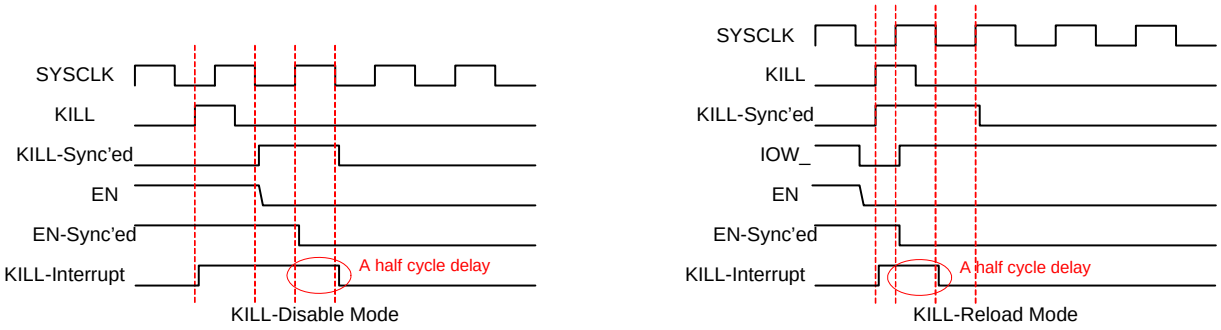

17.3.2 Counter Timing

Enable/Disable Operation. See Timer "Enable/Disable Operation" on page 363.

Terminal Count/Compare Operation. See Timer "Terminal Count/Compare Operation" on page 363.

Multi-Shot Operation. See Timer "Multi-shot Operation" on page 363.

KILL-Disable Operation. See Timer "KILL Disable Operation" on page 364.

KILL-Reload Operation. See Timer "KILL Reload Operation" on page 364.

Multi-Block Operation. See Timer "Multi-Block Terminal Count/Compare Operation" on page 364.

Gate (Enable) Operation. The data input controls the counter enable. The transition on this enable must have at least one 24 MHz cycle of setup time to the block clock. This will be ensured if internal or synchronized external inputs are used.

As shown in Figure 17-15, when the data input is negated (counting is disabled) and the count is 00h, the TC output stays low. When the data input goes high again, the TC occurs on the following input clock. When the block is disabled, the clock is immediately gated low. All internal state is reset, except for DR0, DR1, and DR2, which are unaffected.

Figure 17-15. Counter Terminal Count Timing with Gate Disable

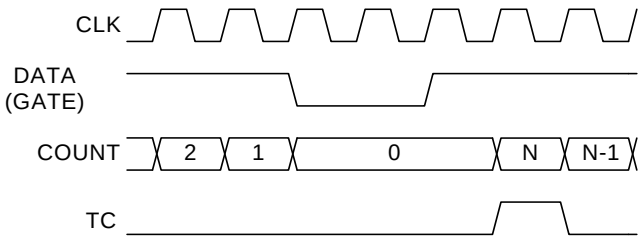

KILL Interrupt Generation. See Timer "KILL Interrupt Generation" on page 365.

17.3.3 Dead Band Timing

Figure 17-16. Basic Dead Band Timing

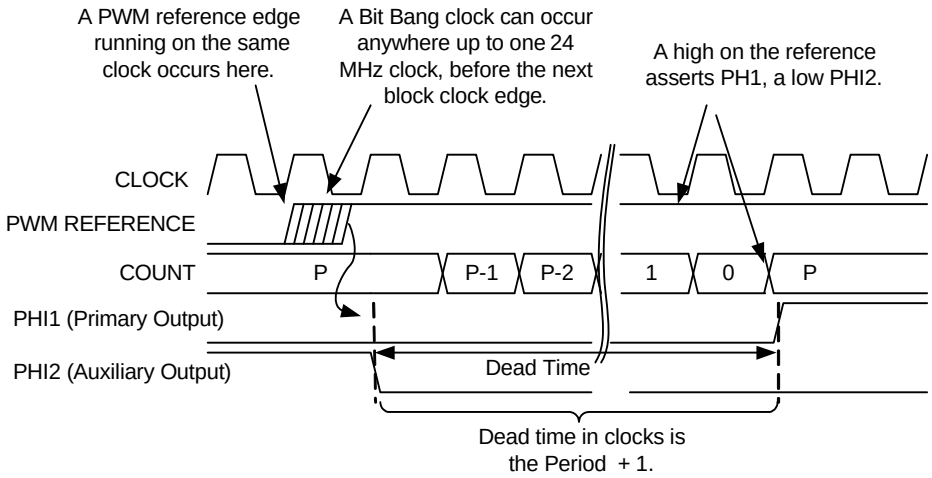

Enable/Disable Operation. Initially both outputs are low. There are no critical timing requirements for enabling the block because dead band processing does not start until the first incoming positive or negative reference edge. In typical operation, it is recommended that the dead band block be enabled first, then the Pulse Width Modulator (PWM) generator block.

When the block is disabled, the clock is immediately gated low. All outputs are gated low, including the interrupt output. All internal states are reset to their configuration specific reset states, except for DR0, DR1, and DR2 which are unaffected.

Normal Operation. Figure 17-16 shows typical dead band timing. The incoming reference edge can occur up to one 24 MHz system clock before the edge of the block clock. On the edge of the block clock, the currently asserted output is negated and the dead band counter is enabled. After Period + 1 clocks, the phase associated with the current state of the PWM reference is asserted (Reference High = Phase 1, Reference Low = Phase 2). The minimum dead time occurs with a period value of 00h and that dead time is one clock cycle.

17.3.3.1 Changing the PWM Duty Cycle

Under normal circumstances, the dead band period is less than the minimum PWM high or low time. As an example, consider Figure 17-17 where the low of the PWM is four clocks, the dead band period is two clocks, and the high time of the PHI2 is two clocks.

Figure 17-17. DB High Time is PWM Width Minus DB Period

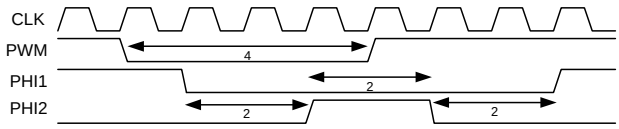

Figure 17-18 illustrates the reduction of the width of the PWM low time by one clock (to three clocks). The dead band period remains the same, but the high time for PHI2 is reduced by one clock (to one clock). Of course the opposite phase, PHI1, decreases in length by one clock.

Figure 17-18. DB High Time is Reduced as PWM Width is Reduced

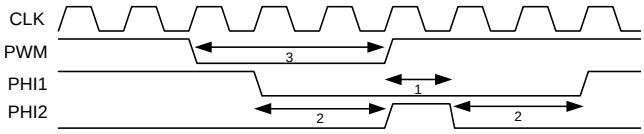

If the width of the PWM low time is reduced to a point where it is equal to the dead band period, the corresponding phase, PHI2, disappears altogether. Note that after the rising edge of the PWM, the opposite phase still has the programmed dead band. Figure 17-19 shows an example where the dead band period is two and the PWM width is two. In this case, the high time of PHI2 is zero clocks. Note that the Phase 1 dead band time is still two clocks.

Figure 17-19. PWM Width Equal to Dead Band Period

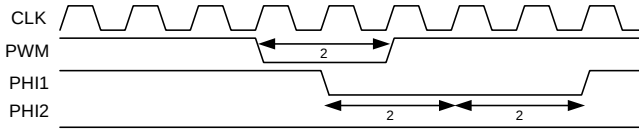

In the case where the dead band period is greater than the high or low of the PWM reference, the output of the associated phase will not be asserted high.

17.3.3.2 Kill Operation

It is assumed that the KILL input will not be synchronized at the row input. (This is not a requirement; however, if synchronized, the KILL operation will have up to two 24 MHz clock cycles latency which is undesirable.) To support the restart modes, the negation of KILL is internally (in the block) synchronized to the 24 MHz system clock.

There are three KILL modes supported. In all cases, the KILL signal asynchronously forces the outputs to logic 0. The differences in the modes come from how dead band processing is restarted.

1. **Synchronous Restart Mode**: When KILL is asserted high, the internal state is held in reset and the initial dead band period is reloaded into the counter. While KILL is held high, incoming PWM reference edges are ignored. When KILL is negated, the next incoming PWM reference edge restarts dead band processing. See Figure 17-20.
2. **Asynchronous Restart Mode**: When KILL is asserted high, the internal state is not affected. When KILL is negated, the outputs are restored, subject to a minimum disable time between one-half and one and one-half clock cycle. See Figure 17-21.
3. **Disable Mode**: There is no specific timing associated with Disable mode. The block is disabled and the user must re-enable the function in firmware to continue processing.

Figure 17-20. Synchronous Restart KILL Mode

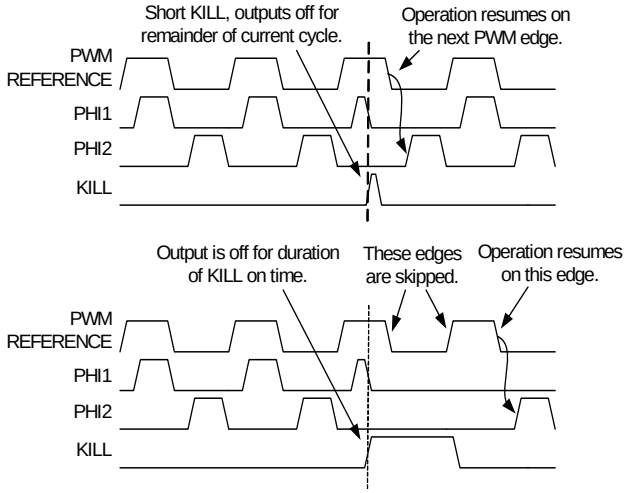

Figure 17-21. Asynchronous Restart Kill Mode

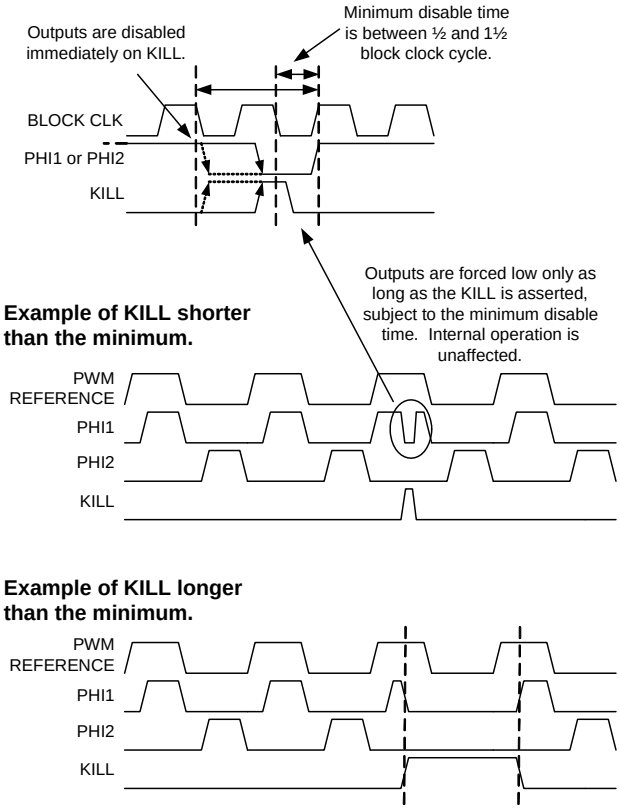

17.3.4 PWMDBL Timing

Enable/Disable Operation. See Timer "Enable/Disable Operation" on page 363.

PPG Start Operation. The PWMDBL function is in PPG mode when multi-shot period register is written with a non-zero value. In non-PPG mode, the PWMDBL continuously outputs its PWM signal. Oppositely, in PPG mode a START signal, either a hardware signal or a software signal (write '1' to EN bit), is used to trigger the PWM output. The PWM output is stopped after the current PWM output period finishes if there is not another trigger signal. The PWM output period will start in the following conditions:

- If there is no PWM output (that is, PWMDBL is enabled and stopped), a START starts a new PWM output period.
- A new PWM output period follows the previous one if START is high when the current PWM output finishes (that is, at last-shot).

In any other condition, the START signal does not affect PWMDBL. To ensure safe timing, START is synchronized at the rising edge of the block clock. See Figure 17-22.

Compare Operation. The Compare operation is identical to the Timer function, except the polarity of compare output is swapped. Note that this compare output is also the reference input to the integrated dead band (see Figure 17-23). The dead band requires at least 2 cycles: high or low pulse on its reference input clock (the dead band needs a removal timing check in the dead band generator sub-block if it is a 2-cycle high or low pulse; it does not need this if it is larger than or equal to 3 cycles).

KILL Operation. The KILL operation has the same mechanism as the Dead Band function. The KILL mode is also identical to the Dead Band function. Refer to the Dead Band function KILL operation.

Figure 17-22. PPG Start Timing

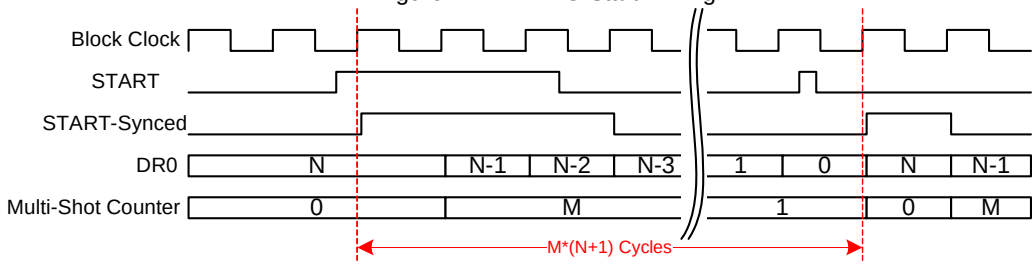

Figure 17-23. PWMDBL Compare Output Timing

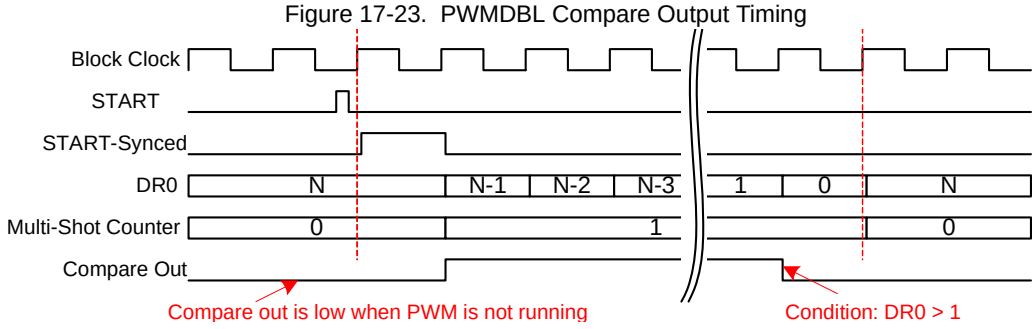

17.3.5 CRCPRS Timing

Enable/Disable Operation. See Timer “Enable/Disable Operation” on page 363.

Multi-Shot Operation in PRS. See Timer “Multi-shot Operation” on page 363.

KILL-Disable Operation in PRS. See Timer “KILL Disable Operation” on page 364.

KILL-Reload Operation in PRS. See Timer “KILL Reload Operation” on page 364.

KILL Interrupt Generation. See Timer “KILL Interrupt Generation” on page 365.

17.3.6 SPI Mode Timing

Figure 17-24 shows the SPI modes, which are typically defined as 0,1, 2, or 3. These mode numbers are an encoding of two control bits: Clock Phase and Clock Polarity.

Clock phase indicates the relationship of the clock to the data. When the clock phase is '0', it means that the data is registered as an input on the leading edge of the clock and the next data is output on the trailing edge of the clock. When the clock phase is '1', it means that the next data is output on the leading edge of the clock and that data is registered as an input on the trailing edge of the clock.

Clock polarity controls clock inversion. When clock polarity is set to '1', the clock ***idle state*** is high.

Figure 17-24. SPI Mode Timing

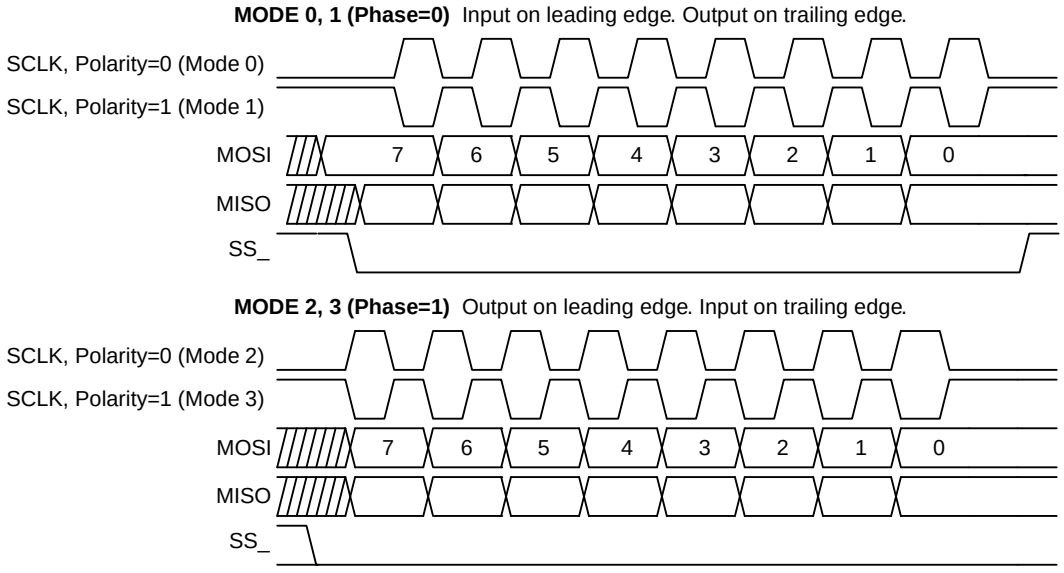

17.3.7 SPIM Timing

Enable/Disable Operation. As soon as the block is configured for SPIM, the primary output is the MSb or LSb of the Shift register, depending on the LSb First configuration in bit 7 of the Control register. The auxiliary output is '1' or '0' depending on the idle clock state of the SPI mode. This is the idle state.

When the SPIM is enabled, the internal reset is released on the divide-by-2 flip-flop and on the next positive edge of the selected input clock. This 1-bit divider transitions to a '1' and remains free-running thereafter.

When the block is disabled, the SCLK and MOSI outputs revert to their idle state. All internal state is reset (including CR0 status) to its configuration-specific reset state, except for DR0, DR1, and DR2 which are unaffected.

Normal Operation. Typical timing for a SPIM transfer is shown in Figure 17-25 and Figure 17-26. The user initially writes a byte to transmit when TX Reg Empty status is true. If no transmission is currently in progress, the data is loaded into the shifter and the transmission is initiated. The TX Reg Empty status is asserted again and the user is allowed to write the next byte to be transmitted to the TX Buffer register. After the last bit is output, if TX Buffer data is available with one-half clock setup time to the next clock, a new byte transmission will be initiated. A SPIM block receives a byte at the same time that it sends one. The SPI Complete or RX Reg Full can be used to determine when the input byte has been received.

Figure 17-25. Typical SPIM Timing in Mode 0 and 1

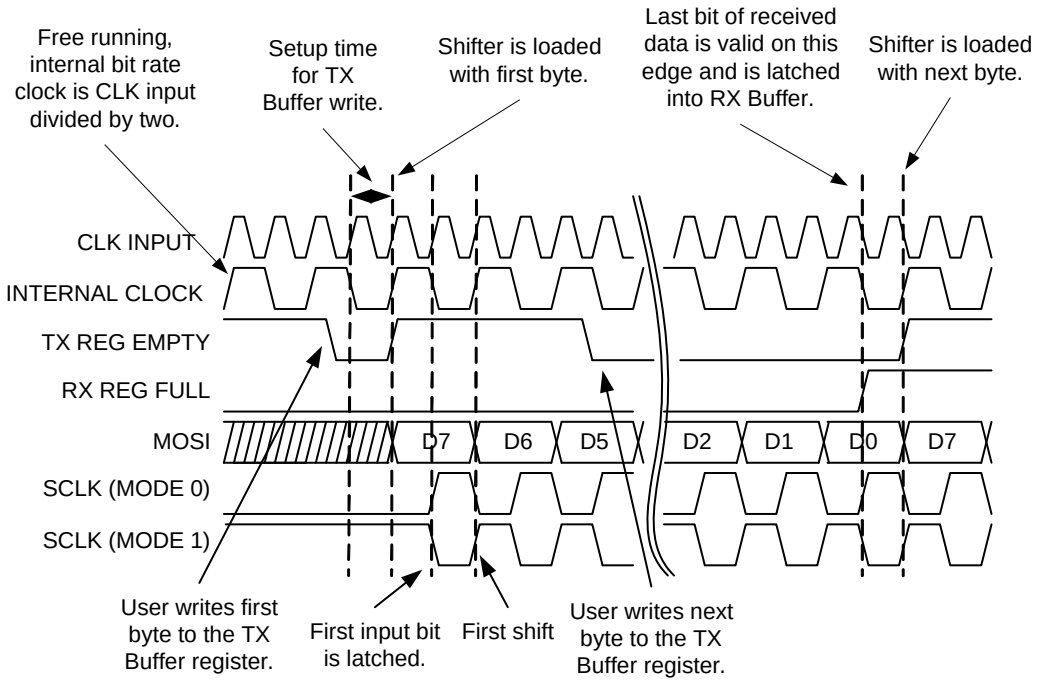

Figure 17-26. Typical SPIM Timing in Mode 2 and 3

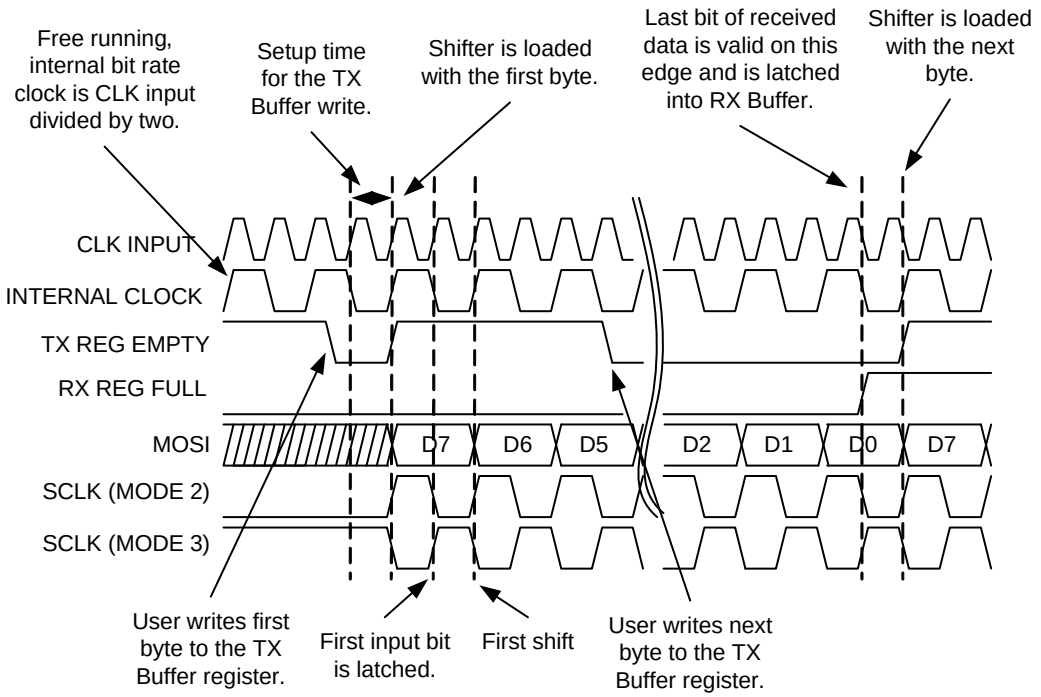

Status Generation and Interrupts. There are four status bits in an SPI Block: TX Reg Empty, RX Reg Full, SPI Complete, and Overrun.

TX Reg Empty indicates that a new byte can be written to the TX Buffer register. When the block is enabled, this status bit is immediately asserted. This status bit is cleared when the user writes a byte of data to the TX Buffer register. TX Reg Empty is a control input to the state machine and, if a transmission is not already in progress, the assertion of this control signal initiates one. This is the default SPIM block interrupt. However, an initial interrupt is not generated when the block is enabled. The user must write a byte to the TX Buffer register and that byte must be loaded into the shifter before interrupts generated from the TX Reg Empty status bit are enabled.

RX Reg Full is asserted on the edge that captures the eighth bit of receive data. This status bit is cleared when the user reads the RX Buffer register (DR2).

SPI Complete is an optional interrupt and is generated when eight bits of data and clock have been sent. In modes 0 and 1, this occurs one-half cycle after RX Reg Full is set; because in these modes, data is latched on the leading edge of the clock and there is an additional one-half cycle remaining to complete that clock. In modes 2 and 3, this occurs at the same edge that the receive data is latched. This signal may be used to read the received byte or it may be used by the SPIM to disable the block after data transmission is complete.

Overrun status is set, if RX Reg Full is still asserted from a previous byte when a new byte is about to be loaded into the RX Buffer register. Because the RX Buffer register is implemented as a latch, Overrun status is set one-half bit clock before RX Reg Full status.

See Figure 17-27 and Figure 17-28 for status timing relationships.

Figure 17-27. SPI Status Timing for Modes 0 and 1

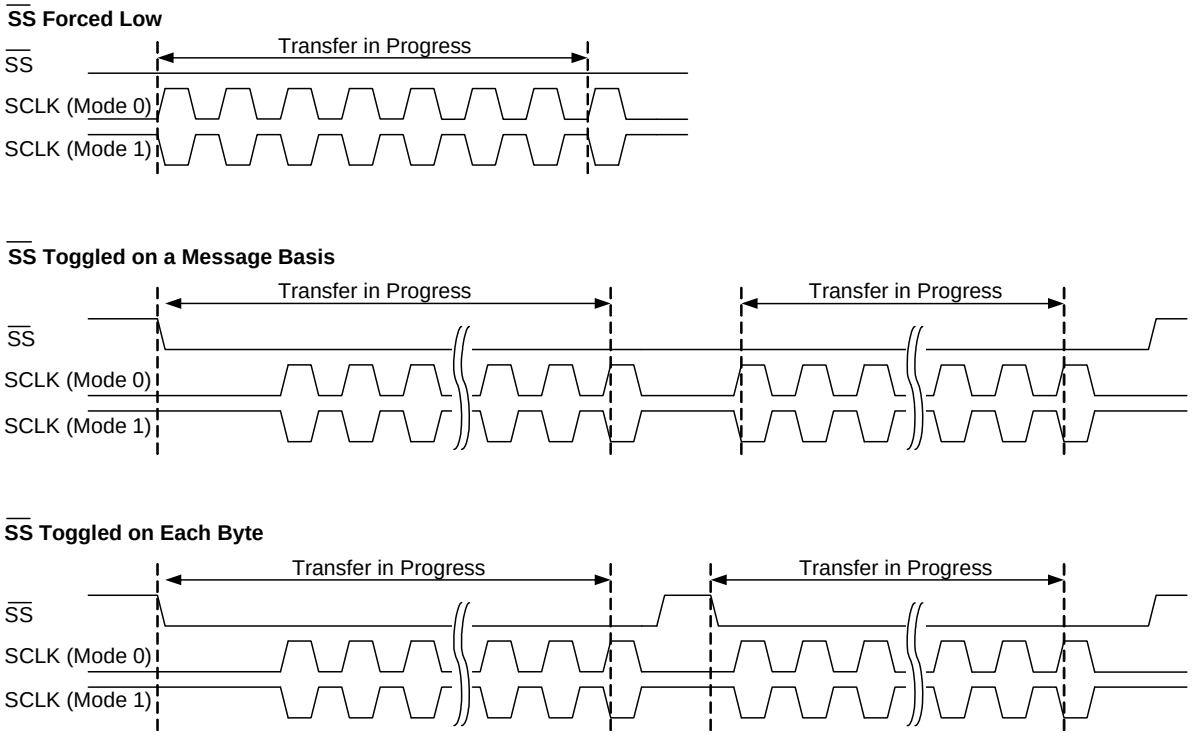

Figure 17-28. SPI Status Timing for Modes 2 and 3

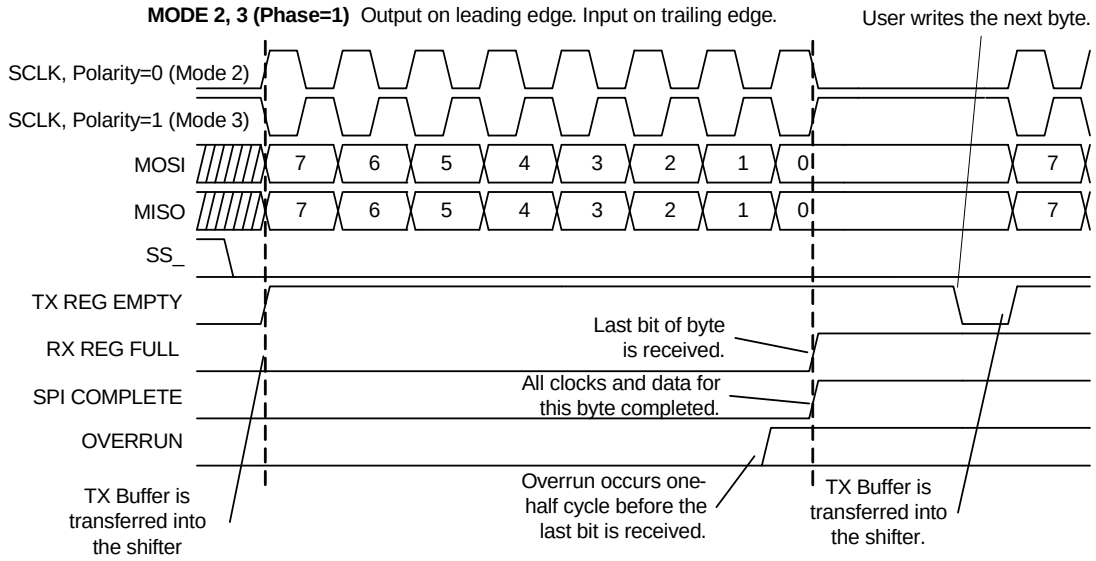

Chained SPIM. When two adjacent communication blocks are chained to form a more-than-8-bit SPIM function, the preceding operations are maintained the same, with the following exceptions:

- More transmissions for more bits.
- Only need to enable LSB block to enable the function such as in chained Timer/Counter/CRCPRS/PWMDBL functions.
- Need to write MSB TX register first and then LSB register to initiate a transmission.
- Always read MSB RX data first and then LSB RX data.
- Always check LSB status bits for whole SPIM status if you follow above TX/RX read/write operation sequence.
- The interrupt in both blocks can be enabled and selected arbitrarily. (But if clearing SPI complete bit or TX Empty bit, still need to read the CR0 register or write DR1 register in that block).

17.3.8 SPIS Timing

Enable/Disable Operation. As soon as the block is configured for SPI Slave and before enabling, the MISO output is set to idle at logic 1. Both the enable bit must be set and the SS_ asserted (either driven externally or forced by firmware programming) for the block to output data. When enabled, the primary output is the MSb or LSb of the shift register, depending on the LSb First configuration in bit 7 of the Control register. The auxiliary output of the SPIS is always forced into tri-state.

Because the SPIS has no internal clock, it must be enabled with setup time to any external master supplying the clock. Setup time is also required for a TX Buffer register write, before the first edge of the clock or the first falling edge of SS_, depending on the mode. This setup time must be assured through the protocol and an understanding of the timing between the master and slave in a system.

When the block is disabled, the MISO output reverts to its idle '1' state. All internal state is reset (including CR0 status) to its configuration-specific reset state, except for DR0, DR1, and DR2 which are unaffected.

Normal Operation. Typical timing for a SPIS transfer is shown in Figure 17-29 and Figure 17-30. If the SPIS is primarily being used as a receiver, the RX Reg Full (polling only) or SPI Complete (polling or interrupt) status may be used to determine when a byte has been received. In this way, the SPIS operates identically with the SPIM. However, there are two main areas in which the SPIS operates differently: 1) SPIS behavior related to the SS_ signal, and 2) TX data queuing (loading the TX Buffer register).

Figure 17-29. Typical SPIS Timing in Modes 0 and 1

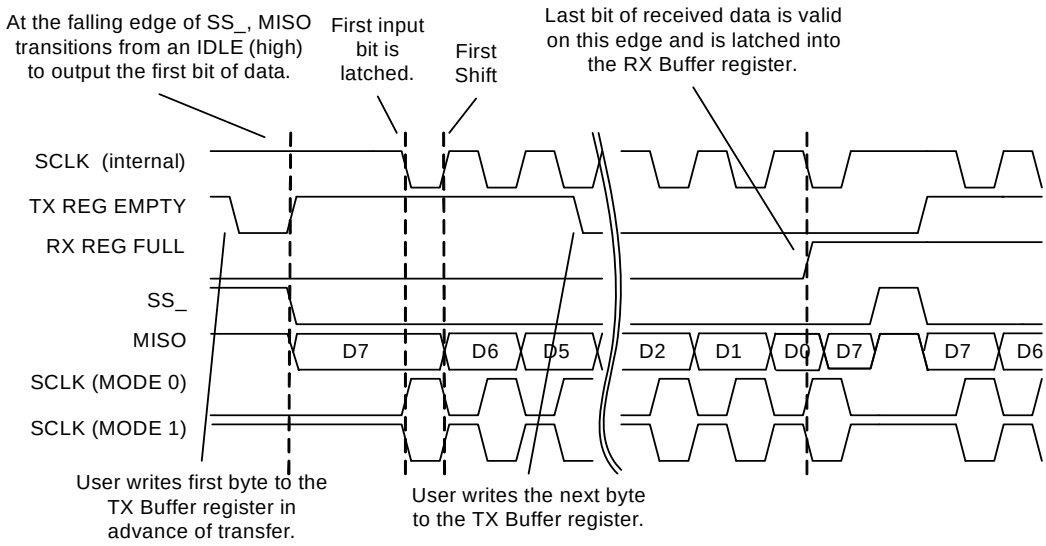

Figure 17-30. Typical SPIS Timing in Modes 2 and 3

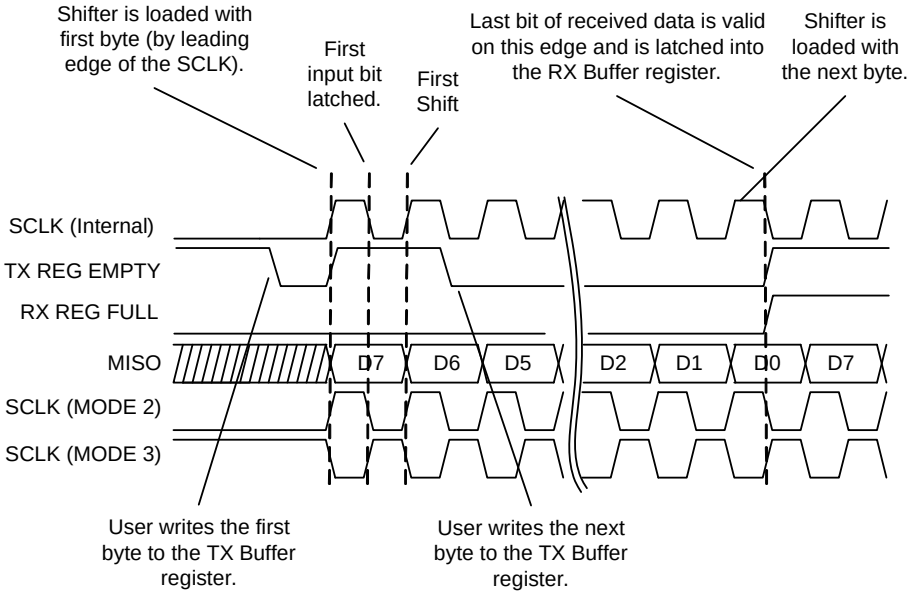

Slave Select (SS_, active low). Slave Select must be asserted to enable the SPIS for receive and transmit. There are two ways to do this:

1. Drive the auxiliary input from a pin (selected by the Aux IO Select bits in the output register). This gives the SPI master control of the slave selection in a multi-slave environment.
2. SS_ may be controlled in firmware with register writes to the output register. When Aux IO Enable = 1, Aux IO Select bit 0 becomes the SS_ input. This allows the user to save an input pin in single slave environments.

When SS_ is negated (whether from an external or internal source), the SPIS state machine is reset and the MISO output is forced to idle at logic 1. In addition, the SPIS will ignore any incoming MOSI/SCLK input from the master.

Status Generation and Interrupts. There are four status bits in the SPIS Block: TX Reg Empty, RX Reg Full, SPI Complete, and Overrun. The timing of these status bits are identical to the SPIM, with the exception of TX Reg Empty which is covered in the section on TX data queuing.

Status Clear On Read. Refer to the same subsection in “SPIM Timing” on page 371.

TX Data Queuing. Most SPI applications call for data to be sent back from the slave to the master. Writing firmware to accomplish this requires an understanding of how the Shift register is loaded from the TX Buffer register.

All modes use the following mechanism: (1) If there is no transfer in progress, (2) if the shifter is empty, and (3) if data is available in the TX Buffer register, the byte is loaded into the shifter.

The only difference between the modes is that the definition of “transfer in progress” is slightly different between modes 0 and 1, and modes 2 and 3.

Figure 17-31 illustrates TX data loading in modes 0 and 1. A transfer in progress is defined to be from the falling edge of SS_ to the point at which the RX Buffer register is loaded with the received byte. This means that to send a byte in the next transfer, it must be loaded into the TX Buffer register before the falling edge of SS_. This ensures a minimum setup time for the first bit, because the leading edge of the first SCLK must latch in the received data. If SS_ is not toggled between each byte or is forced low through the configuration register, the leading edge of SCLK is used to define the start of transfer. However, in this case, the user must provide the required setup time (one-half clock minimum before the leading edge), with a knowledge of system latencies and response times.

Figure 17-31. Mode 0 and 1 Transfer in Progress

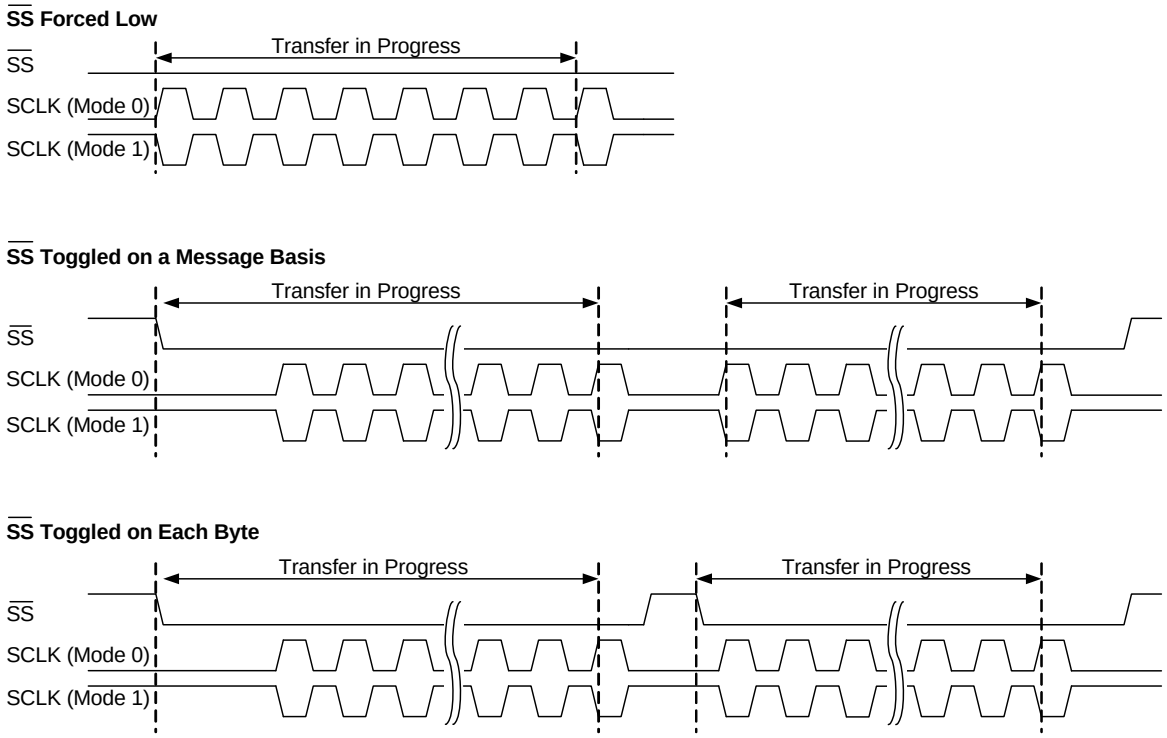

Figure 17-32 illustrates TX data loading in modes 2 and 3. In this case, there is no dependence on $\overline{SS}$ and a transfer in progress is defined to be from the leading edge of the first SCLK to the point at which the RX Buffer register is loaded with the received byte. Loading the shifter by the leading edge of the clock has the effect of providing the required one-half clock setup time, as the data is latched into the receiver on the trailing edge of the SCLK in these modes.

Figure 17-32. Mode 2 and 3 Transfer in Progress

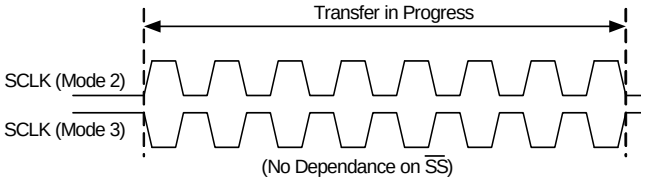

Chained SPIS. When two adjacent communication blocks are chained to form a more-than-8-bit SPIS function, the preceding SPIS operations are maintained the same, with the following exceptions:

- More transits for more bits.
- Only need to enable LSB block to enable the function such as in chained Timer/Counter/CRCPRS/PWMDBL functions.
- Need to write MSB TX register first and then LSB register to set new data.
- Always read MSB RX data first and then LSB RX data.
- Always check LSB status bits for whole SPIM status if you follow above TX/RX read/write operation sequence.
- The interrupt in both blocks can be enabled and selected arbitrarily. (But if clearing SPI Complete bit or TX Empty bit, still need to read the CR0 register or write DR1 register in that block).

17.3.9 Transmitter Timing

Enable/Disable Operation. As soon as the block is configured for the Transmitter and before enabling, the primary output is set to idle at logic 1, the mark state. The output will remain '1' until the block is enabled and a transmission is initiated. The auxiliary output will also idle to '1', which is the idle state of the associated SPI mode 3 clock.

When the Transmitter is enabled, the internal reset is released on the divide-by-eight clock generator circuit. On the next positive edge of the selected input clock, this 3-bit up counter circuit, which generates the bit clock with the MSb, starts counting up from 00h, and is free-running thereafter.

When the block is disabled, the clock is immediately gated low. All internal state is reset (including CR0 status) to its configuration-specific reset state, except for DR0, DR1, and DR2 which are unaffected.

Transmit Operation. Transmission is initiated with a write to the TX Buffer register (DR1). The CPU write to this register is required to have one-half bit clock setup time for the data, to be recognized at the next positive internal bit clock edge. As shown in Figure 17-33, after the setup time is met, there is one clock of latency until the data is loaded into the shifter and the START bit is generated to the TXD (primary) output.

Figure 17-33. Typical Transmitter Timing

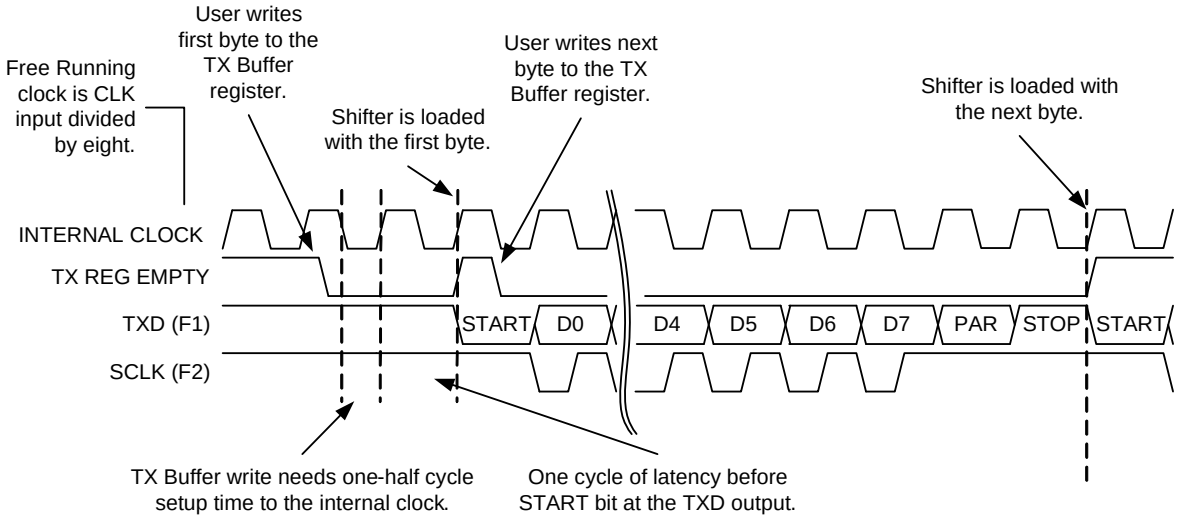

Figure 17-34 shows a detail of the Tx Buffer load timing. The data bits are shifted out on each of the subsequent clocks. Following the eighth bit, if parity is enabled, the parity bit is sent to the output. Finally, the STOP bit is multiplexed into the data stream. With one-half cycle setup to the next clock, if new data is available from the TX Buffer register, the next byte is loaded on the following clock edge and the process is repeated. If no data is available, a mark (logic 1) is output.

Figure 17-34. Tx Buffer Load Timing

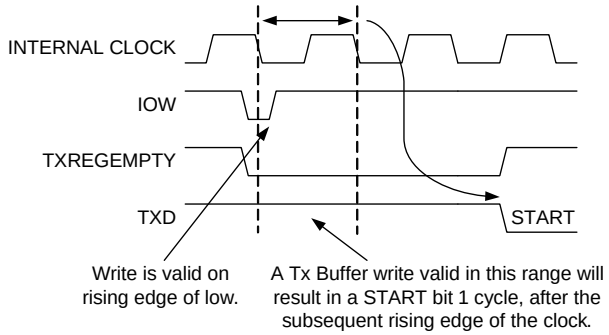

The SCLK (auxiliary) output has a SPI mode 3 clock associated with the data bits (for the mode 3 timing, see Figure 17-24). During the mark (idle) and framing bits the SCLK output is high.

Status Generation. There are two status bits in the Transmitter CR0 register: TX Reg Empty and TX Complete.

TX Reg Empty indicates that a new byte can be written to the TX Buffer register. When the block is enabled, this status bit is immediately asserted. This status bit is cleared when the user writes a byte of data to the TX Buffer register and set when the data byte in the TX Buffer register is transferred into the shifter. If a transmission is not already in progress, the assertion of this signal initiates one subject to the timing.

The default interrupt in the Transmitter is tied to TX Reg Empty. However, an initial interrupt is not generated when the block is enabled. The user must write an initial byte to the TX Buffer register. That byte must be transferred into the shifter, before interrupts generated from the TX Reg Empty status bit are enabled. This prevents an interrupt from occurring immediately on block enable.

TX Complete is an optional interrupt and is generated when all bits of data and framing bits have been sent. It is cleared on a read of the CR0 register. This signal may be used to determine when it is safe to disable the block after data transmission is complete. In an interrupt driven Transmitter application, if interrupt on TX Complete is selected, the status must be cleared on every interrupt; otherwise, the status will remain high and no subsequent interrupts are logged. See Figure 17-35 for timing relationships.

Status Clear On Read. Refer to the SPIM subsection in “SPIM Timing” on page 371.

Figure 17-35. Status Timing for the Transmitter

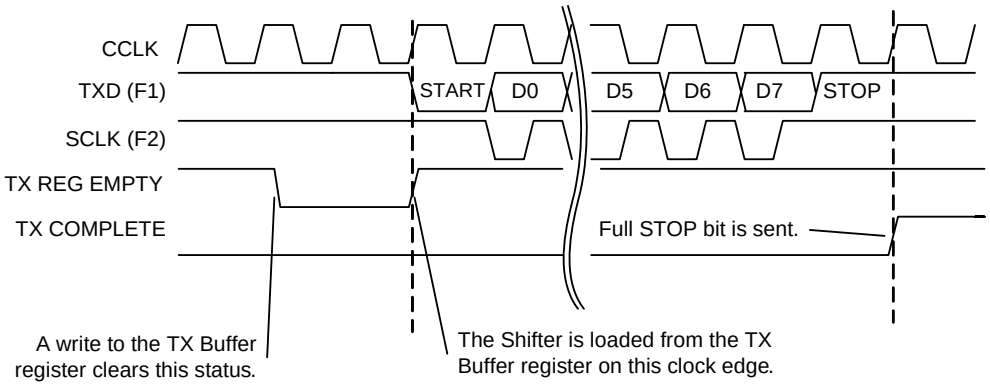

17.3.10 Receiver Timing

Enable/Disable Operation. As soon as the block is configured for Receiver and before enabling, the primary output is connected to the data input (RXD). This output will continue to follow the input, regardless of enable state. The auxiliary output will idle to '1', which is the idle state of the associated SPI mode 3 clock.

When the Receiver is enabled, the internal clock generator is held in reset until a START bit is detected on the input. The block must be enabled with a setup time to the first START bit input.

When the block is disabled, the clock is immediately gated low. All internal state is reset (including CR0 status) to its configuration-specific reset state, except for DR0, DR1, and DR2 which are unaffected.

Receive Operation. A clock, which must be eight times the desired baud rate, is selected as the CLK input. This clock is an input to the RX block clock divider. When the receiver is idle, the clock divider is held in reset. As shown in Figure 17-36, reception is initiated when a START bit (logic 0) is detected on the RXD input. When this occurs, the reset is negated to the clock divider and the 3-bit counter starts an up-count. The block clock is derived from the MSb of this counter (corresponding to a count of four), which serves to sample each incoming bit at the nominal center point. This clock also sequences the state machine at the specified bit rate.

The sampled data is registered into an input flip-flop. This flip-flop feeds the DR0 Shift register. Only data bits are shifted into the Shift register.

At the STOP sample point, the block is immediately (within one cycle of the 24 MHz system clock) set back into an idle state. In this way, the clock generation circuit can immediately enable the search for the next START bit, thereby re-synchronizing the bit clock with the incoming bit rate on every new data byte reception. The RX Reg Full status bit, as well as error status, is also set at the STOP sample point.

To facilitate connection to other digital blocks, the RXD input is passed directly to the RXDOUT (primary) output. The SCLK (auxiliary) output has an SPI mode 3 clock associated with the data bits (for mode 3 timing see Figure 17-36). During the mark (idle) and framing bits, the SCLK output is high.

Figure 17-36. Receiver Operation

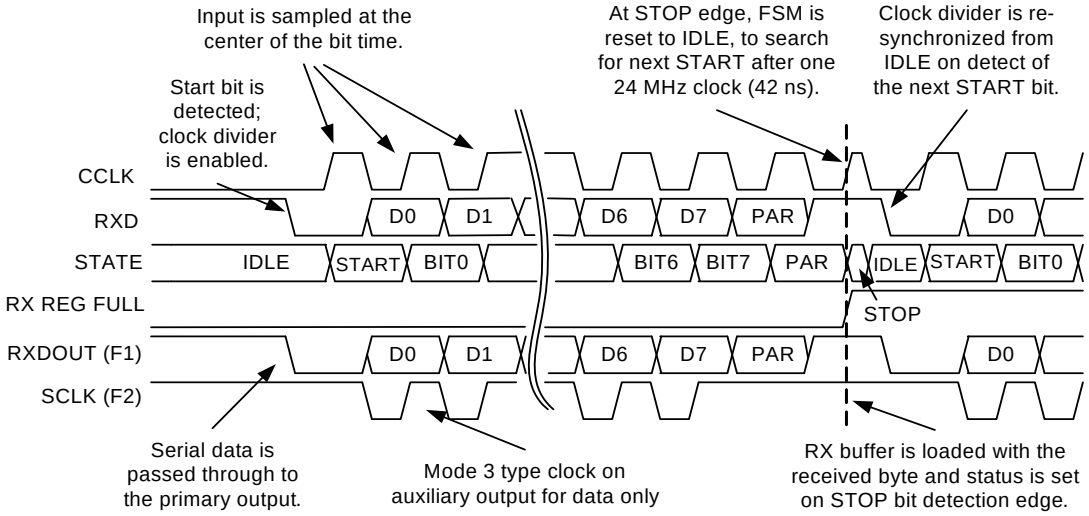

Clock Generation and Start Detection. The input clock selection is a free running, eight times over-sampling clock. This clock is used by the clock divider circuit to generate the block clock at the bit rate. As shown in Figure 17-37, the clock block is derived from the MSb of a 3-bit counter, giving a sample point as near to the center of the bit time as possible. This block clock is used to clock all internal circuits.

Because the RXD bit rate is asynchronous to the block bit clock, these clocks must be continually re-aligned. This is accomplished with the START bit detection.

When in IDLE state, the clock divider is held in reset. On START (when the input RXD transitions are detected as a logic 0), the reset is negated and the divider is enabled to count at the eight times rate. If the RXD input is still logic 0 after three samples of the input clock, the status RXACTIVE is asserted, which initiates a reception. If this sample of the RXD line is a logic 1, the input '0' transition was assumed to be a false start and the Receiver remains in the idle state.

Figure 17-37 shows that the internal bit clock (CCLK) is running slower than the external TX bit clock and the STOP bit is sampled later than the actual center point. After the STOP bit is sampled, the 24 MHz reset pulse forces the Receiver back to an idle state. In this state, the next START bit search is initiated, resynchronizing the RX bit clock to the TX bit clock.

Figure 17-37. Clock Generation and Start Detection

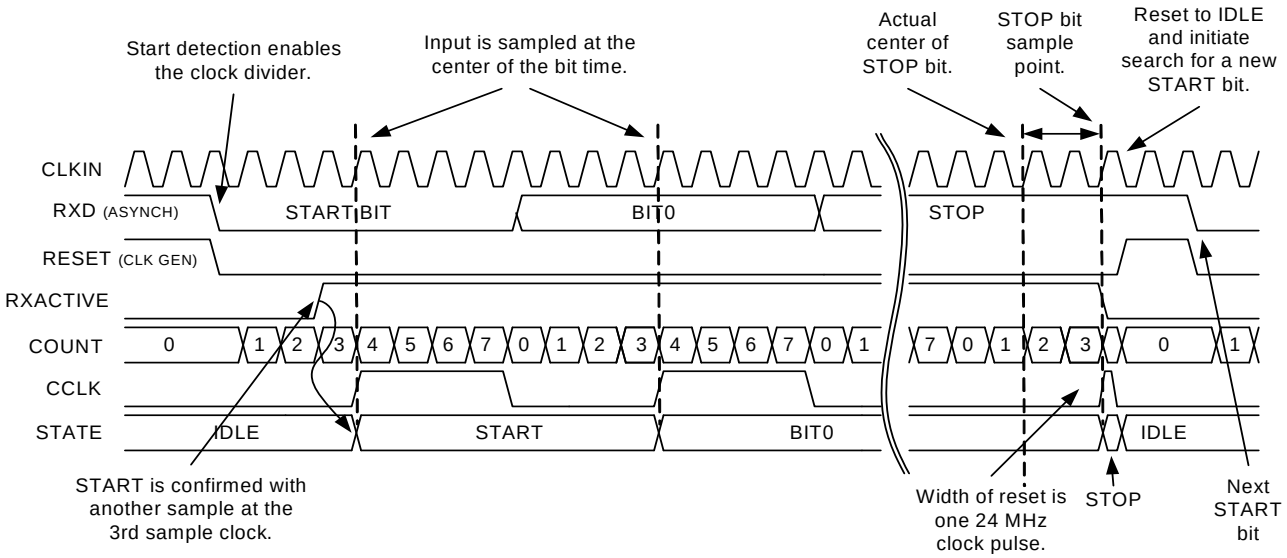

This resynchronization process (forcing the state back to idle) occurs regardless of the value of the STOP bit sample. It is important to reset as soon as possible, so that maximum performance can be achieved. Figure 17-38 shows an example where the RX block clock bit rate is slower than the external TX bit rate. The sample point shifts to successively later times. In the extreme case shown, the RX samples the STOP bit at the trailing edge. In this case, the receiver has counted 9.5 bit times, while the transmitter has counted 10 bit times. Therefore, for a 10-bit message, the maximum theoretical clock offset, for the message to be received correctly, is represented by one-half bit time or five percent. If the RX and TX clocks exceed this offset, a logic 0 may be sampled for the STOP bit. In this case, the Framing Error status is set.

Figure 17-38. Example RX Resynchronization

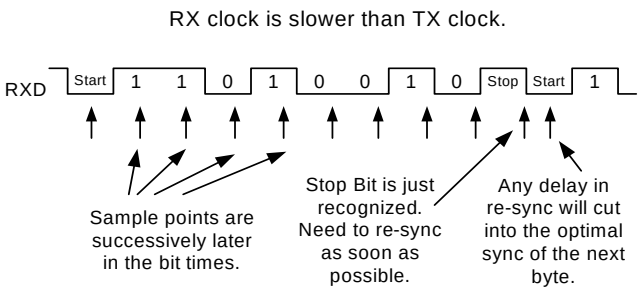

This theoretical maximum will be degraded by the resynchronization time, which is fixed at approximately 42 ns. In a typical 115.2 Kbaud example, the bit time is 8.70 µs. In this case the new maximum offset is:

$$((4.35\ \text{ms} - 42\ \text{ns}) / 4.35\ \text{ms}) \times 5\% \text{ or } 4.95\%$$

At slower baud rates, this value gets closer to the theoretical maximum of five percent.

Status Generation. There are five status bits in a Receiver block: RX Reg Full, RX Active, Framing Error, Overrun, and Parity Error. All status bits, except RX Active and Overrun, are set synchronously on the STOP bit sample point.

RX Reg Full indicates a byte has been received and transferred into the RX Buffer register. This status bit is cleared when the user reads the RX Buffer register (DR2). The setting of this bit is synchronized to the STOP sample point. This is the earliest point at which the Framing Error status can be set; and therefore, error status is defined to be valid when RX Reg Full is set.

RX Active can be polled to determine if a reception is in progress. This bit is set on START detection and cleared on STOP detection. This bit is not ***sticky*** and there is no way for the user to clear it.

Framing Error status indicates that the STOP bit associated with a given byte was not received correctly (expecting a '1', but received a '0'). This will typically occur when the difference between the baud rates of the transmitter and receiver is greater than the maximum allowed.

Overrun occurs when there is a received data byte in the RX Buffer register and a new byte is loaded into the RX Buffer register, before the user has had a chance to read the previous one. Because the RX Buffer register is actually a latch, Overrun status is set one-half cycle before RX Reg Full. This means that although the new data is not available, the previous data has been overwritten because the latch was opened.

Parity Error status indicates that resulting parity calculation on the received byte does not match the value of the parity bit that was transmitted. This status is set on the sample point of the STOP signal.

Status Clear On Read. Refer to the SPIM subsection in "SPIM Timing" on page 371.

Figure 17-39. Status Timing for Receiver

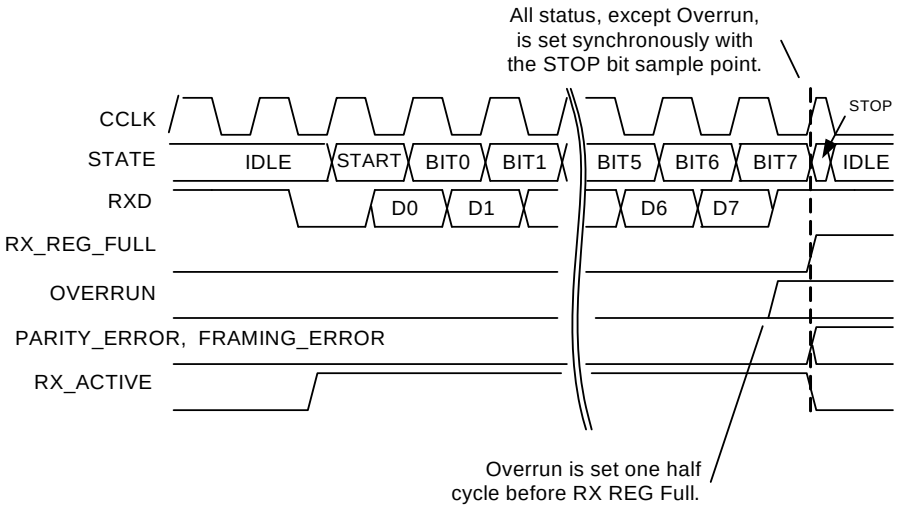

17.3.11 DSM Timing

Enable/Disable Operation. The enable/disable timing is similar to Timer/Counter but looser because it is only single block function.

KILL Operation. DSM supports two KILL modes: KILL-Disable and KILL_Async. KILL-Disable is same as Timer/Counter KILL-Disable. KILL-Async is same as Dead Band KILL-Async mode.

Section E: Analog System

The configurable Analog System section discusses the analog components of the PSoC® device and the registers associated with those components. Note that the analog output drivers are described in the PSoC Core section, Analog Output Drivers chapter on page 79, because they are part of the core input and output signals. This section encompasses the following chapters:

- Analog Interface on page 393
- Analog Array on page 409
- Analog Input Configuration on page 417
- Analog Reference on page 421
- Switched Capacitor PSoC® Block on page 431
- Continuous Time PSoC® Block on page 425
- Two Column Limited Analog System on page 441

Top Level Analog Architecture

The following figures show the analog system architecture for each of the CY8C28xxx subfamilies in detail. Note that the CY8C28x03 devices have no analog blocks. With the exception of the analog drivers, each component of the figure is discussed at length in this section.

Analog System Block Diagram for CY8C28x13 Devices

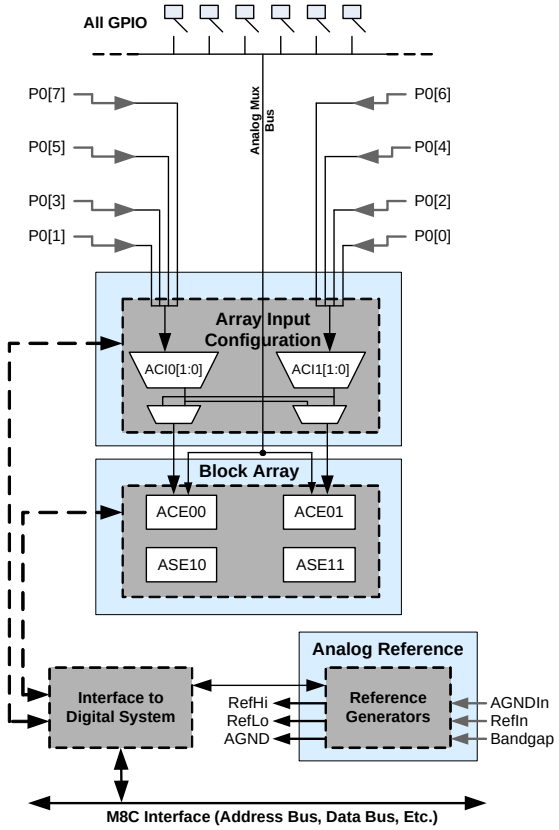

The CY8C28x13 device group has limited analog functionality. It has no regular analog blocks and four Type-E Limited analog blocks. This device group has an analog mux bus which allows analog input on all GPIO. It has no analog outputs and two analog columns.

Analog System Block Diagram for CY8C28x23 Devices

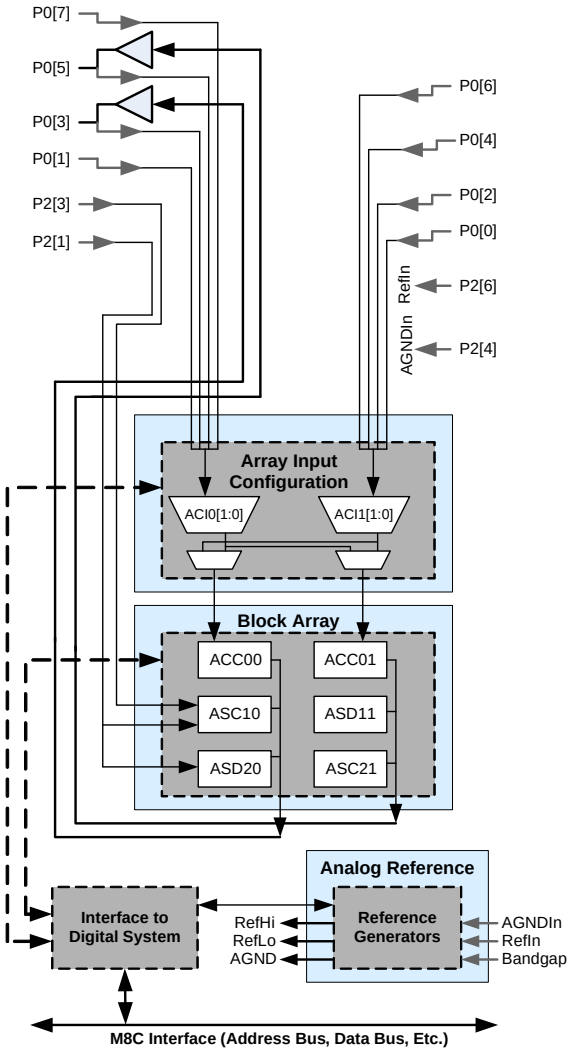

The CY8C28x23 device group has six regular analog blocks and no Type-E Limited analog blocks. It has two analog outputs and two analog columns.

Analog System Block Diagram for CY8C28x33 Devices

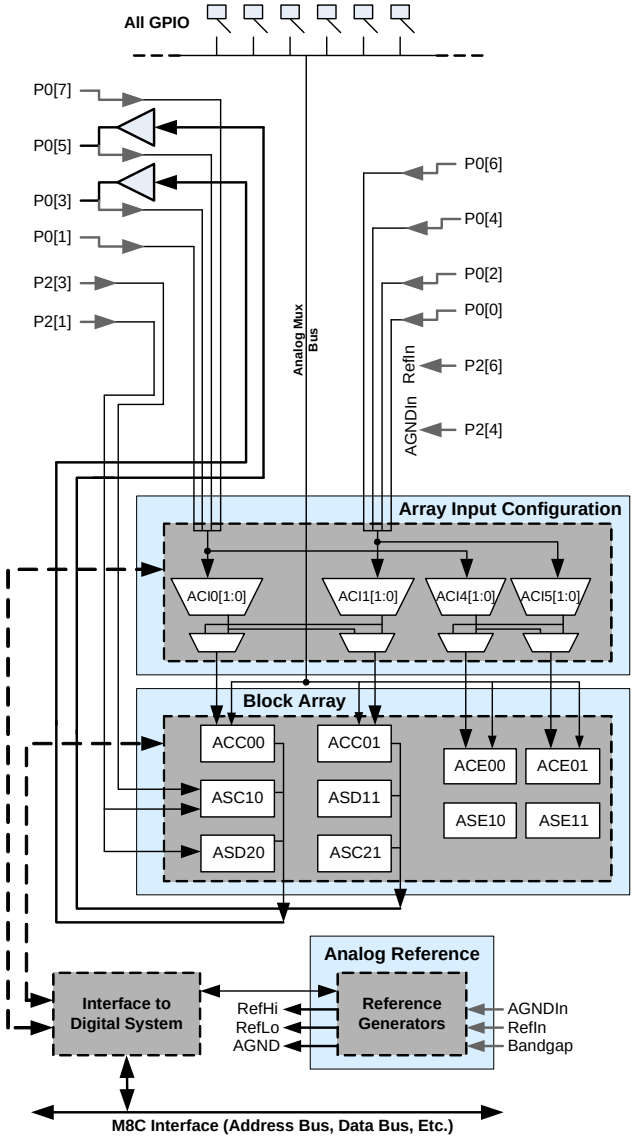

The CY8C28x33 device group has six regular analog blocks and four Type-E Limited analog blocks. This device group has an analog mux bus which allows analog input on all GPIO.It has two analog outputs and four analog columns.

Analog System Block Diagram for CY8C28x43 Devices

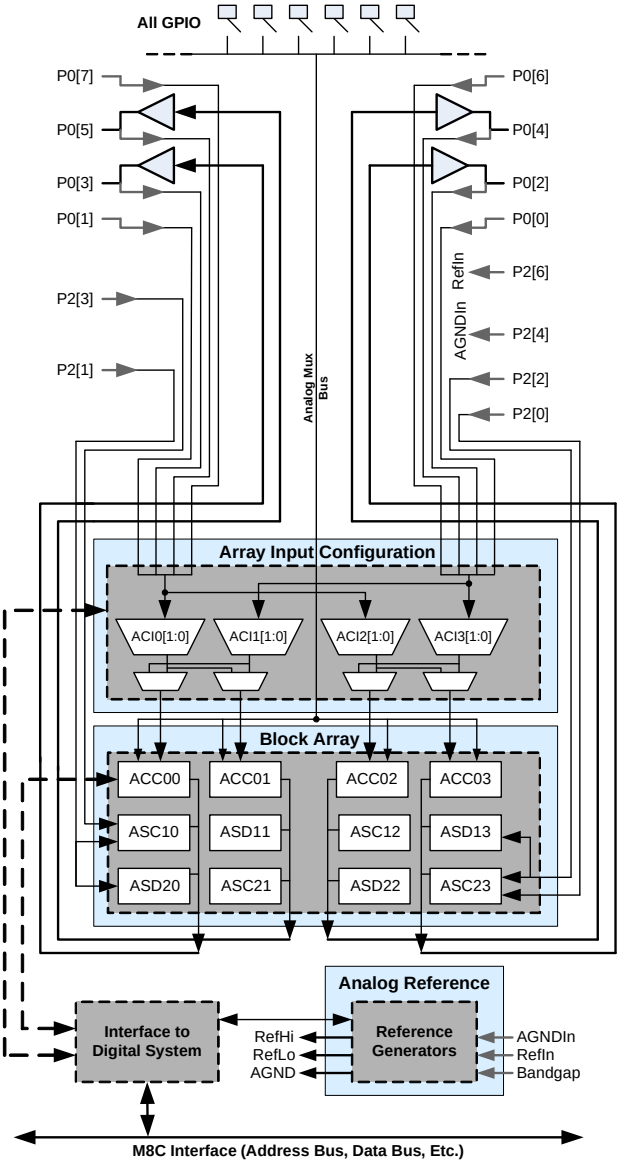

The CY8C28x43 device group has12 regular analog blocks and no Type-E Limited analog blocks. This device group has an analog mux bus which allows analog input on all GPIO. It has four analog outputs and four analog columns.

Analog System Block Diagram for CY8C28x45 and CY8C28x52 Devices

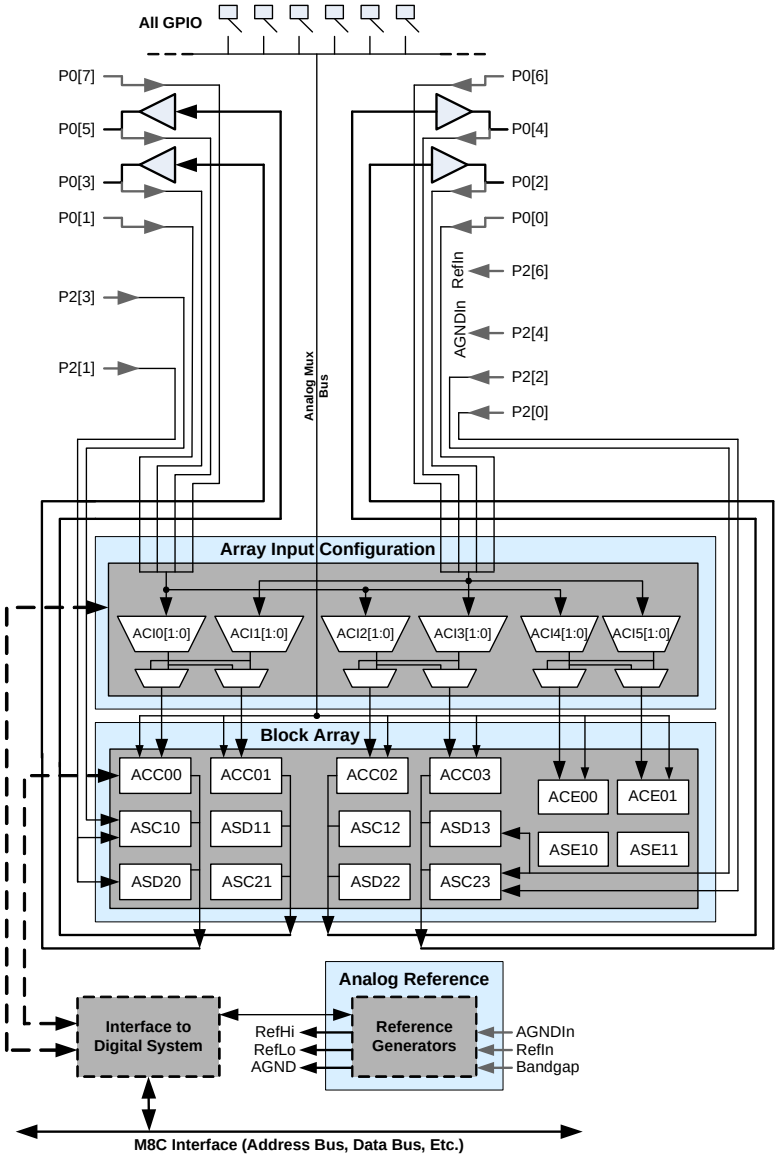

The CY8C28x45 and CY8C28x52 device groups have 12 regular analog blocks and four Type-E Limited analog blocks. These device groups have an analog mux bus which allows analog input on all GPIO. They have four analog outputs and six analog columns.

Interpreting the Analog Documentation

Information in this section covers all PSoC devices with a base part number of CY8C28xxx. The primary analog distinction between these devices is the number of analog columns: 0, 2, or 4 columns. The following table lists the resources available for specific device groups. While reading the analog system section, determine and keep in mind the number of analog columns that are in your device, to accurately interpret the documentation.

PSoC Device Characteristics

PSoC Part Number	Digital I/O (max)	Digital Rows	Digital Blocks	Analog Inputs (max)	Analog Outputs	Analog Columns	Regular Analog Blocks	Limited Analog Blocks
CY8C28x03*	**24**	**3**	**12**	8	0	0	0	0
CY8C28x13*	**40**	**3**	**12**	40	0	2	0	4
CY8C28x23	**44**	**3**	**12**	10	2	2	6	0
CY8C28x33	**40**	**3**	**12**	40	2	4	6	4
CY8C28x43	**44**	**3**	**12**	44	4	4	12	0
CY8C28x45	**44**	**3**	**12**	44	4	4	12	4
CY8C28x52	**24**	**2**	**8**	24	4	4	12	4

* Limited analog functionality.

Application Description

PSoC blocks are user configurable system resources. On-chip analog PSoC blocks reduce the need for many MCU part types and external peripheral components. Analog PSoC blocks are configured to provide a wide variety of peripheral functions. The *PSoC Designer Software Integrated Development Environment* provides automated configuration of PSoC blocks by selecting the desired functions. PSoC Designer then generates the proper configuration information and prints a device data sheet unique to that configuration.

A precision internal voltage reference provides accurate analog comparisons. A temperature sensor input is provided to the analog PSoC block array, supporting applications such as battery chargers and data acquisition, without requiring external components.

Defining the Analog Blocks

There are three analog PSoC block types: Continuous Time (CT) blocks, and Type C and Type D Switch Capacitor (SC) blocks. CT blocks provide continuous time analog functions. SC blocks provide switched capacitor analog functions.

Each of the analog blocks has many potential inputs and several outputs. The inputs to these blocks include ***analog signals*** from external sources, intrinsic analog signals driven from neighboring analog blocks, or various voltage reference sources.

The analog blocks are organized into columns. Each column contains one Continuous Time (CT) block, Type C (ACC); one Switched Capacitor (SC) block, Type C (ASC); and one Switched Capacitor block, Type D (ASD). However, the number of analog columns in a specific part can either be 0, 2, or 4 columns. To determine the number of columns in your PSoC device, refer to the PSoC Device Characteristics table at the beginning of this section.

The blocks in a particular column all run off the same clocking source. The blocks in a column also share some output bus resources.

There are three types of outputs from each analog block and additional two discrete outputs in the Continuous Time blocks.

1. The analog output bus (ABUS) is an analog bus resource that is shared by all of the analog blocks in a column. Only one block in a column can actively drive this bus at any one time, with the user having control of this output through register settings. This is the only analog output that can be driven directly to a pin.
2. The comparator bus (CBUS) is a digital bus resource that is shared by all of the analog blocks in a column. Only one block in a column can be actively driving this bus at any one time, with the user having control of this output through register settings.
3. The local outputs (OUT, GOUT, and LOUT in the Continuous Time blocks) are routed to neighbor blocks. The various input ***multiplexer (mux)*** connections (NMux, PMux, RBotMux, AMux, BMux, and CMux) all use the output bus from one block as their input.

Analog Functionality

The following is a sampling of the functions that operate within the capability of the analog PSoC blocks, using one analog PSoC block, multiple analog blocks, a combination of more than one *type* of analog block, or a combination of analog and digital PSoC blocks. Most of these functions are currently available as ***user modules*** in *PSoC Designer*. Others will be added in the future. Refer to the *PSoC Designer* software for additional information and the most up-to-date list of user modules.

- Delta-Sigma Analog-to-Digital Converters
- Successive Approximation Analog-to-Digital Converters
- Incremental Analog-to-Digital Converters
- Digital to Analog Converters
- Programmable Gain/Loss Stage
- Analog Comparators
- Zero-Crossing Detectors
- Sample and Hold
- Low-Pass Filter
- Band-Pass Filter
- Notch Filter
- Amplitude Modulators
- Amplitude Demodulators
- Sine-Wave Generators
- Sine-Wave Detectors
- Sideband Detection
- Sideband Stripping
- Temperature Sensor
- Audio Output Drive
- DTMF Generator
- FSK Modulator
- Embedded Modem

By modifying registers, as described in this document, users can configure PSoC blocks to perform these functions and more. The philosophy of the analog functions supplied is as follows.

- Cost effective, single-ended configuration for reasonable speed and accuracy, providing a simple interface to most real-world analog inputs and outputs.
- Flexible, System-on-Chip programmability, providing variations in functions.
- Function specific, easily selected trade-offs of accuracy and resolution with speed, resources (number of analog blocks), and power dissipated for that application.

Analog Register Summary

The following table lists all the PSoC registers for the analog system in address order (Add. column) within their system resource configuration. The bits that are grayed out are reserved bits. If these bits are written, they should always be written with a value of '0'. The naming conventions for the SC and CT registers and their arrays of PSoC blocks are detailed in their respective table title rows.

Note that all PSoC devices, with a base part number of CY8C28xxx fall into one of the following categories with respect to their analog PSoC arrays: 4 column device, 2 column device, or 0 column device. The "PSoC Analog System Block Diagram" at the beginning of this section illustrates this.

In the following table, the third column from the left titled "Analog Columns" indicates which of the three PSoC device categories the register falls into. To determine the number of analog columns in your PSoC device, refer to the table titled "PSoC Device Characteristics" on page 387.

Summary Table of the Analog Registers

Add.	Name	Analog Cols.	Bit 7	Bit 6	Bit 5	Bit 4	Bit 3	Bit 2	Bit 1	Bit 0	Access
ANALOG INTERFACE REGISTERS (page 400)											
0,62h	CLK_CR3	4					SYSDIR[3:0]				RW : 00
0,64h	CMP_CR0	4	COMP[3:0]				AINT[3:0]				# : 00
		2			COMP[1:0]				AINT[1:0]		
0,65h	ASY_CR	4, 2		SARCNT[2:0]			SARSIGN	SARCOL[1:0]		SYNCEN	RW : 00
0,66h	CMP_CR1	4	CLDIS[3]	CLDIS[2]	CLDIS[1]	CLDIS[0]					RW : 00
		2			CLDIS[1]	CLDIS[0]			CLK1X[1]	CLK1X[0]	
0,E6h	DEC_CR0	4, 2	IGEN[3:0]				ICLKS0	DCOL[1:0]		DCLKS0	RW : 00
0,E7h	DEC_CR1	4		IDEC	ICLKS3	ICLKS2	ICLKS1	DCLKS3	DCLKS2	DCLKS1	RW : 00
		2	ECNT	IDEC	ICLKS3	ICLKS2	ICLKS1	DCLKS3	DCLKS2	DCLKS1	
1,60h	CLK_CR0	4	AColumn3[1:0]		AColumn2[1:0]		AColumn1[1:0]		AColumn0[1:0]		RW : 00
		2					AColumn1[1:0]		AColumn0[1:0]		
1,61h	CLK_CR1	4, 2		SHDIS	ACLK1[2:0]			ACLK0[2:0]			RW : 00
1,63h	AMD_CR0	4		AMOD2[2:0]				AMOD0[2:0]			RW : 00
		2						AMOD0[2:0]			
1,64h	CMP_GO_EN	2	GOO5	GOO1	SEL1[1:0]		GOO4	GOO0	SEL0[1:0]		RW : 00
1,65h	CMP_GO_EN1	2	GOO7	GOO3	SEL3[1:0]		GOO6	GOO2	SEL2[1:0]		RW : 00
1,66h	AMD_CR1	4		AMOD3[2:0]				AMOD1[2:0]			RW : 00
		2						AMOD1[2:0]			
1,67h	ALT_CR0	4, 2	LUT1[3:0]				LUT0[3:0]				RW : 00
1,68h	ALT_CR1	4	LUT3[3:0]				LUT2[3:0]				RW : 00
1,69h	CLK_CR2	4					ACLK1R			ACLK0R	RW : 00
ANALOG INPUT CONFIGURATION REGISTERS (page 419)											
0,60h	AMX_IN	4	ACI3[1:0]		ACI2[1:0]		ACI1[1:0]		ACI0[1:0]		RW : 00
		2					ACI1[1:0]		ACI0[1:0]		
1,62h	ABF_CR0	4	ACol1Mux	ACol2Mux	ABUF1EN	ABUF2EN	ABUF0EN	ABUF3EN	Bypass	PWR	RW : 00
		2	ACol1Mux		ABUF1EN		ABUF0EN		Bypass	PWR	
1,6Ah	AMUX_CFG1		ABusMux3	ABusMux2	ACol3Mux	ACol0Mux	MUXCLKR[2:0]			ENR	RW : 00
ANALOG REFERENCE REGISTER (page 421)											
0,63h	ARF_CR	4, 2		HBE	REF[2:0]			PWR[2:0]			RW : 00
CONTINUOUS TIME PSoC BLOCK REGISTERS (page 426)											
0,70h	ACC00CR3	4, 2			AGND_PD	RTopMux1	LPCMPEN	CMOUT	INSAMP	EXGAIN	RW : 00
0,71h	ACC00CR0	4, 2	RTapMux[3:0]				Gain	RTopMux	RBotMux[1:0]		RW : 00
0,72h	ACC00CR1	4, 2	AnalogBus	CompBus	NMux[2:0]			PMux[2:0]			RW : 00
0,73h	ACC00CR2	4, 2	CPhase	CLatch	CompCap	TMUXEN	TestMux[1:0]		PWR[1:0]		RW : 00

Summary Table of the Analog Registers *(continued)*

Add.	Name	Analog Cols.	Bit 7	Bit 6	Bit 5	Bit 4	Bit 3	Bit 2	Bit 1	Bit 0	Access
0,74h	ACC01CR3	4, 2			AGND_PD	RTopMux1	LPCMPEN	CMOUT	INSAMP	EXGAIN	RW : 00
0,75h	ACC01CR0	4, 2	RTapMux[3:0]				Gain	RTopMux	RBotMux[1:0]		RW : 00
0,76h	ACC01CR1	4, 2	AnalogBus	CompBus	NMux[2:0]			PMux[2:0]			RW : 00
0,77h	ACC01CR2	4, 2	CPhase	CLatch	CompCap	TMUXEN	TestMux[1:0]		PWR[1:0]		RW : 00
0,78h	ACC02CR3	4			AGND_PD	RTopMux1	LPCMPEN	CMOUT	INSAMP	EXGAIN	RW : 00
0,79h	ACC02CR0	4	RTapMux[3:0]				Gain	RTopMux	RBotMux[1:0]		RW : 00
0,7Ah	ACC02CR1	4	AnalogBus	CompBus	NMux[2:0]			PMux[2:0]			RW : 00
0,7Bh	ACC02CR2	4	CPhase	CLatch	CompCap	TMUXEN	TestMux[1:0]		PWR[1:0]		RW : 00
0,7Ch	ACC03CR3	4			AGND_PD	RTopMux1	LPCMPEN	CMOUT	INSAMP	EXGAIN	RW : 00
0,7Dh	ACC03CR0	4	RTapMux[3:0]				Gain	RTopMux	RBotMux[1:0]		RW : 00
0,7Eh	ACC03CR1	4	AnalogBus	CompBus	NMux[2:0]			PMux[2:0]			RW : 00
0,7Fh	ACC03CR2	4	CPhase	CLatch	CompCap	TMUXEN	TestMux[1:0]		PWR[1:0]		RW : 00
CY8C28XXX REMAPPED PSoC BLOCK REGISTERS (page 441)											
1,73h	ACE_AMD_CR0	4					AMOD0[3:0]				RW : 00
1,75h	ACE_AMX_IN	4					ACI1[1:0]		ACI0[1:0]		RW : 00
1,76h	ACE_CMP_CR0	4			COMP[1:0]				AINT[1:0]		# : 00
1,77h	ACE_CMP_CR1	4			CLDIS[1:0]						RW : 00
1,79h	ACE_CMP_GI_EN	4	GIO5	GIO1	SEL1[1:0]		GIO4	GIO0	SEL0[1:0]		RW : 00
1,7Ah	ACE_ALT_CR0	4	LUT1[3:0]				LUT0[3:0]				RW : 00
1,7Bh	ACE_ABF_CR0	4	ACE1Mux	ACE0Mux							RW : 00
1,7Dh	ACE00CR1	4		CompBus	NMux[2:0]			PMux[2:0]			RW : 00
1,7Eh	ACE00CR2	4							FullRange	PWR	RW : 00
1,7Fh	ASE10CR0	4	FVal								RW : 00
1,83h	ACE_AMD_CR1	4					AMOD1[3:0]				RW : 00
1,85h	ACE_PWM_CR	4			HIGH[2:0]			LOW[1:0]		PWMEN	RW : 00
1,86h	ACE_ADC0_CR	4	CMPST	LOREN	SHEN		CBSRC	AUTO		ADCEN	# : 00
1,87h	ACE_ADC1_CR	4	CMPST	LOREN	SHEN		CBSRC	AUTO		ADCEN	# : 00
1,89h	ACE_CLK_CR0	4					AColumn1[1:0]		AColumn0[1:0]		RW : 00
1,8A	ACE_CLK_CR1	4	ACLK1[3:0]				ACLK0[3:0]				RW : 00
1,8Bh	ACE_CLK_CR3	4		SYS1	DIVCLK1[1:0]			SYS0	DIVCLK0[1:0]		RW : 00
1,8Dh	ACE01CR1	4		CompBus	NMux[2:0]			PMux[2:0]			RW : 00
1,8Eh	ACE01CR2	4							FullRange	PWR	RW : 00
1,Fh *	ASE11CR0	4	FVal								RW : 00
SWITCHED CAPACITOR PSoC BLOCK REGISTERS (page 434)											
Switched Capacitor Block Registers, Type C (page 435)											
0,80h	ASC10CR0	4, 2	FCap	ClockPhase	ASign	ACap[4:0]					RW : 00
0,81h	ASC10CR1	4, 2	ACMux[2:0]			BCap[4:0]					RW : 00
0,82h	ASC10CR2	4, 2	AnalogBus	CompBus	AutoZero	CCap[4:0]					RW : 00
0,83h	ASC10CR3	4, 2	ARefMux[1:0]		FSW1	FSW0	BMuxSC[1:0]		PWR[1:0]		RW : 00
0,88h	ASC12CR0	4	FCap	ClockPhase	ASign	ACap[4:0]					RW : 00
0,89h	ASC12CR1	4	ACMux[2:0]			BCap[4:0]					RW : 00
0,8Ah	ASC12CR2	4	AnalogBus	CompBus	AutoZero	CCap[4:0]					RW : 00
0,8Bh	ASC12CR3	4	ARefMux[1:0]		FSW1	FSW0	BMuxSC[1:0]		PWR[1:0]		RW : 00
0,94h	ASC21CR0	4, 2	FCap	ClockPhase	ASign	ACap[4:0]					RW : 00
0,95h	ASC21CR1	4, 2	ACMux[2:0]			BCap[4:0]					RW : 00
0,96h	ASC21CR2	4, 2	AnalogBus	CompBus	AutoZero	CCap[4:0]					RW : 00
0,97h	ASC21CR3	4, 2	ARefMux[1:0]		FSW1	FSW0	BMuxSC[1:0]		PWR[1:0]		RW : 00
0,9Ch	ASC23CR0	4	FCap	ClockPhase	ASign	ACap[4:0]					RW : 00
0,9Dh	ASC23CR1	4	ACMux[2:0]			BCap[4:0]					RW : 00

Summary Table of the Analog Registers *(continued)*

Add.	Name	Analog Cols.	Bit 7	Bit 6	Bit 5	Bit 4	Bit 3	Bit 2	Bit 1	Bit 0	Access
0,9Eh	ASC23CR2	4	AnalogBus	CompBus	AutoZero	CCap[4:0]					RW : 00
0,9Fh	ASC23CR3	4	ARefMux[1:0]		FSW1	FSW0	BMuxSC[1:0]		PWR[1:0]		RW : 00
Switched Capacitor Block Registers, Type D (page 438)											
0,84h	ASD11CR0	4, 2	FCap	ClockPhase	ASign	ACap[4:0]					RW : 00
0,85h	ASD11CR1	4, 2	AMux[2:0]			BCap[4:0]					RW : 00
0,86h	ASD11CR2	4, 2	AnalogBus	CompBus	AutoZero	CCap[4:0]					RW : 00
0,87h	ASD11CR3	4, 2	ARefMux[1:0]		FSW1	FSW0	BSW	BMuxSD	PWR[1:0]		RW : 00
0,8Ch	ASD13CR0	4	FCap	ClockPhase	ASign	ACap[4:0]					RW : 00
0,8Dh	ASD13CR1	4	AMux[2:0]			BCap[4:0]					RW : 00
0,8Eh	ASD13CR2	4	AnalogBus	CompBus	AutoZero	CCap[4:0]					RW : 00
0,8Fh	ASD13CR3	4	ARefMux[1:0]		FSW1	FSW0	BSW	BMuxSD	PWR[1:0]		RW : 00
0,90h	ASD20CR0	4, 2	FCap	ClockPhase	ASign	ACap[4:0]					RW : 00
0,91h	ASD20CR1	4, 2	AMux[2:0]			BCap[4:0]					RW : 00
0,92h	ASD20CR2	4, 2	AnalogBus	CompBus	AutoZero	CCap[4:0]					RW : 00
0,93h	ASD20CR3	4, 2	ARefMux[1:0]		FSW1	FSW0	BSW	BMuxSD	PWR[1:0]		RW : 00
0,98h	ASD22CR0	4	FCap	ClockPhase	ASign	ACap[4:0]					RW : 00
0,99h	ASD22CR1	4	AMux[2:0]			BCap[4:0]					RW : 00
0,9Ah	ASD22CR2	4	AnalogBus	CompBus	AutoZero	CCap[4:0]					RW : 00
0,9Bh	ASD22CR3	4	ARefMux[1:0]		FSW1	FSW0	BSW	BMuxSD	PWR[1:0]		RW : 00

LEGEND
x An “x” before the comma in the address field indicates that this register can be accessed or written to no matter what bank is used.
Access is bit specific. Refer to the Register Details chapter on page 125 for additional information.
R Read register or bit(s).
W Write register or bit(s).

18. Analog Interface

This chapter explains the Analog Interface and its associated registers. The analog system interface is a collection of system level interfaces to the analog array and analog reference block. For a complete table of the analog interface registers, refer to the "Summary Table of the Analog Registers" on page 389. For a quick reference of all PSoC® registers in address order, refer to the Register Details chapter on page 125.

18.1 Architectural Description

Figure 18-1 displays the top-level diagram of the PSoC device's analog interface system.

Figure 18-1. Analog Comparator Bus Slice

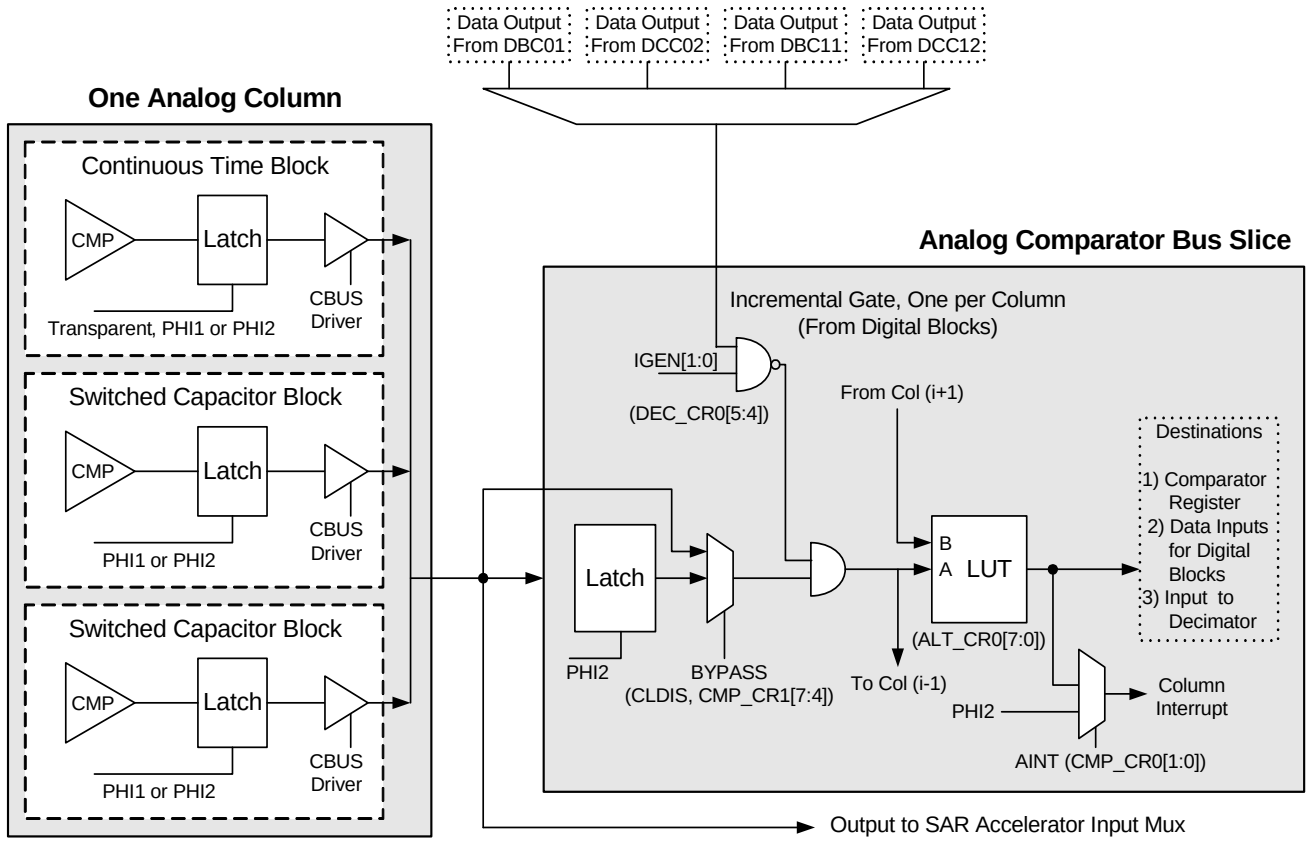

18.1.1 Analog Data Bus Interface

The Analog Data Bus Interface isolates the analog array and analog system interface registers from the CPU system data bus, to reduce bus loading. Transceivers are implemented on the system data bus to isolate the analog data bus from the system data bus. This creates a local analog data bus.

18.1.2 Analog Comparator Bus Interface

Each analog column has a dedicated comparator bus associated with it. Every analog PSoC block has a comparator output that can drive this bus. However, only one analog block in a column can actively drive the comparator bus for a column at any one time. The output on the comparator bus drives into the digital blocks as a data input. It also serves as an input to the decimator, as an interrupt input, and is available as read only data in the Analog Comparator Control register (CMP_CR0).

Figure 18-1 illustrates one column of the comparator bus. In the Continuous Time (CT) analog blocks, the CPhase and CLatch bits of CT Block Control Register 2 determine whether the output signal on the comparator bus is latched inside the block, and if it is, which clock phase it is latched on. In the Switched Capacitor (SC) analog blocks, the output on the comparator bus is always latched. The ClockPhase bit in SC Block Control Register 0 determines the phase on which this data is latched and available.

The comparator bus is latched before it is available, to either drive the digital blocks, interrupt, decimator, or for it to be read in the CMP_CR0 register. The latch for each comparator bus is transparent (the output tracks the input) during the high period of PHI2. During the low period of PHI2, the latch retains the value on the comparator bus during the high-to-low transition of PHI2. The CMP_CR0 register is described in the “CMP_CR0 Register” on page 401. There is also an option to force the latch in each column into a transparent mode by setting bits in the CMP_CR1 register.

The CY8C28xxx PSoC devices have an additional comparator synchronization option in which the 1X direct column clock selection is used to synchronize the analog comparator bus. This allows for higher frequency comparator sampling.

As shown in Figure 18-1, the comparator bus output is gated by the primary output of a selected digital block. This feature is used to precisely control the integration period of an incremental ADC. Any digital block can be used to drive the gate signal. This selection may be made with the ICLKS bits in registers DEC_CR0 and DEC_CR1. This function may be enabled on a column-by-column basis, by setting the IGEN bits in the DEC_CR0 register.

The analog comparator bus output values can be modified or combined with another analog comparator bus through the Analog ***look-up table (LUT)*** function. The LUT takes two inputs, A and B, and provides a selection of 16 possible logic functions for those inputs. The LUT A and B inputs for each column comparator output is shown in the following table.

Table 18-1. A and B Inputs for Each Column Comparator LUT Output

Comparator LUT Output	A	B
4 Column PSoCs		
Column 0	ACMP0	ACMP1
Column 1	ACMP1	ACMP2
Column 2	ACMP2	ACMP3
Column 3	ACMP3	ACMP0
2 Column PSoCs		
Column 0	ACMP0	ACMP1
Column 1	ACMP1	0
Column 2	0	0
Column 3	0	ACMP0

The LUT configuration is set in two control registers, ALT_CR0 and ALT_CR1. Each selection for each column is encoded in four bits. The function value corresponding to the bit encoding is shown in the following table.

Table 18-2. RDIxLTx Register

LUTx[3:0]	0h: 0000: FALSE 1h: 0001: A .AND. $\overline{B}$ 2h: 0010: A .AND. $\overline{B}$ 3h: 0011: $\overline{A}$ 4h: 0100: $\overline{A}$ .AND. B 5h: 0101: B 6h: 0110: A .XOR. B 7h: 0111: A .OR. B 8h: 1000: A .NOR. B 9h: 1001: $\overline{A}$ .XNOR. B Ah: 1010: $\overline{B}$ Bh: 1011: $\overline{A}$ .OR. $\overline{B}$ Ch: 1100: $\overline{A}$ Dh: 1101: $\overline{A}$ .OR. B Eh: 1110: A. NAND. B Fh: 1111: TRUE

18.1.3 Analog Column Clock Generation

The analog array switched capacitor blocks require a two-phase, non-overlapping clock. The switched cap blocks are arranged in four columns, two to a column (a third block in the column is a continuous time block).

An analog column clock generator is provided for each column and this clock is shared among the blocks in that column. The input clock source for each column clock generator is selectable according to the CLK_CR0 register. It is important to note that regardless of the clock source selected, the output frequency of the column clock generator is the input frequency divided by four. There are four selections for each column: V1, V2, ACLK0, and ACLK1. The V1 and V2 clock signals are global system clocks. Programming options for these system clocks can be accessed in the OSC_CR1 register. Each of the ACLK0 and ACLK1 clock selections are driven by a selection of digital block outputs.

The settings for the digital block selection are located in register CLK_CR1 and the register CLK_CR2.

The timing for analog column clock generation is shown in Figure 18-2. The dead band time between two phases of the clock is designed to be a minimum of 21 ns.

Figure 18-2. Two Phase Non-Overlapping Clock Generation

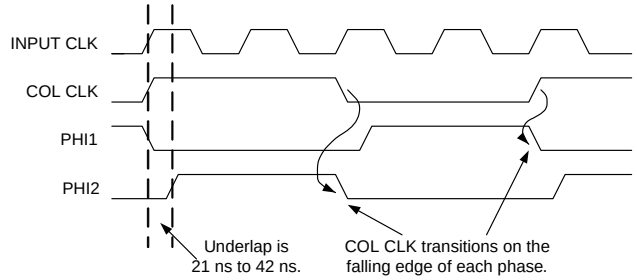

18.1.3.1 Column Clock Synchronization

When analog signals are routed between blocks in adjacent columns, it is important that the clocks in these columns are synchronized in phase and frequency. Frequency synchronization may be achieved by selecting the same input source to two or more columns. However, there is a special feature of the column clock interface logic that provides a resynchronization of clock phase. This function is activated on any I/O write to either the Column Clock Selection register (CLK_CR0) or the Reference Calibration Clock register (RCL_CR). A write to either of these registers initiates a synchronous reset of the column clock generators, restarting all clocks to a known state. This action causes all columns with the same selected input frequency to be in phase. Writing these registers should be avoided during critical analog processing, as column clocks are all re-initialized and thus a discontinuity in PHI1/PHI2 clocking will occur.

Figure 18-3. Column Clock Resynchronize on an I/O Write

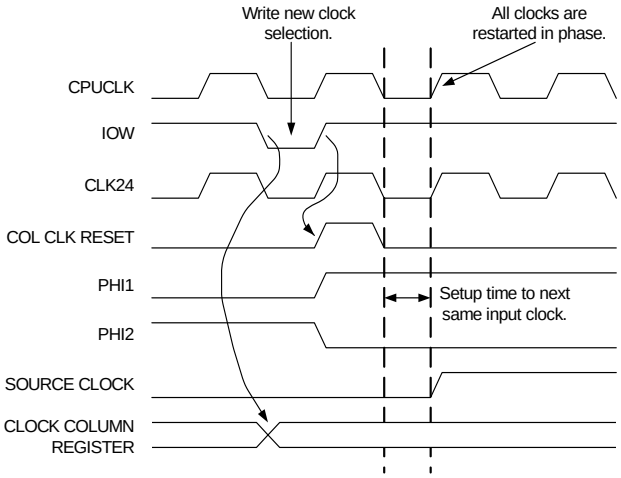

18.1.4 Decimator and Incremental ADC Interface

The Decimator and Incremental ADC Interface provides hardware support and signal routing for analog-to-digital conversion functions, specifically the Delta Signal ADC and the Incremental ADC. The control signals for this interface are split between two registers: DEC_CR0 and DEC_CR1.

18.1.4.1 Decimator

The Decimator is a hardware block that is used to perform digital processing on the analog block outputs. Note that the decimator function is not in the CY8C28x03 devices.

The decimator interface provides the following signals, which are routed between the analog array and analog clock generation circuitry to the decimator block.

1. CD: Comparator Data
2. CLK2X: Selected analog column's 2x clock
3. CLK: Selected analog column's 1x clock
4. BW

The source for the decimator data input (CD) is selected from any of the four column comparator outputs plus several other sources. After the source column is selected, the two clocks associated with that column (CLK2X and CLK) are also routed to the decimator. These clocks are by-products of the column clock generators and are specific to the timing of the decimator. See the Decimator chapter for details.

The DCLKS0 and DCLKS1 bits, which are split between the DEC_CR0 and DEC_CR1 registers, are used to select a source for the decimator output latch enable. The decimator is typically run autonomously over a given period. The length of this period is set in a timer block that is running in conjunction with the analog processing. At the terminal count of this timer, the primary output goes high for one clock cycle. This pulse is translated into the decimator output latch enable signal, which transfers data from the internal accumulators to an output buffer. The terminal count also causes an interrupt and the CPU may read this output buffer at any time between one latch event and the next.

Note If the Decimation Rate bits in DECx_CR are set, then this timer is not needed. All decimator timing is handled internal to the decimator block.

18.1.4.2 Incremental ADC

The analog interface has support for the incremental ADC operation through the ability to gate the analog comparator outputs. This gating function is required to precisely control the digital integration period that is performed in a digital block, as part of the function. A digital block pulse width modulator (PWM) is used as a source to provide the gate signal. Only one source for the gating signal can be selected. However, the gating can be applied independently to any of the column comparator outputs.

The ICLKS bits, which are split between the DEC_CR0 and DEC_CR1 registers, are used to select a source for the incremental gating signal. The four IGEN bits are used to independently enable the gating function on a column-by-column basis.

The E type analog columns in CY8C28x13, CY8C28x33, CY8C28x45, and CY8C28x52 devices contain a dedicated block that can perform this gating function using VC3. When this dedicated PWM is configured, it overrides the ICLKS selection as defined by the DEC_CR0 and DEC_CR1 registers.

18.1.5 Analog Modulator Interface (Mod Bits)

The Analog ***Modulator*** Interface provides a selection of signals that are routed to any of the four analog array ***modulation*** control signals. There is one modulation control signal for each Type C Analog Switched Capacitor block in every analog column. There are eight selections, which include the analog comparator bus outputs, two global outputs, and a digital block broadcast bus. The selections for all columns are identical and are contained in the AMD_CR0 and AMD_CR1 registers. The Mod bit is XORed with the Switched Capacitor block ***sign bit*** (ASign in ASCxxCR0) to provide dynamic control of that bit.

18.1.6 Analog Synchronization Interface (Stalling)

Note that this function is not supported in the CY8C28x03, and CY8C28x13 PSoC devices.

For high precision analog operation, it is necessary to precisely time when updated register values are available to the analog PSOC blocks. The optimum time to update values in Switch Capacitor registers is at the beginning of the PHI1 active period. Depending on the relationship between the CPU CLK and the analog column clock, the CPU I/O write cycle can occur at any 24 MHz master clock boundary in the PHI1 or PHI2 cycle. Register values may be written at arbitrary times; however, glitches may be apparent at analog outputs. This is because the capacitor value is changing when the circuit is designed to be settling.

The SYNCEN bit in the Analog Synchronization Control register (ASY_CR) is designed to address this problem. When the SYNCEN bit is set, an I/O write instruction to any Switch Capacitor register is blocked at the interface and the CPU will stall. On the subsequent rising edge of PHI1, the CPU stall is released, allowing the I/O write to be performed at the destination analog register. This mode synchronizes the I/O write action to perform at the optimum point in the analog cycle, at the expense of CPU ***bandwidth***. Figure 18-4 shows the timing for this operation.

Figure 18-4. Synchronized Write to a DAC Register

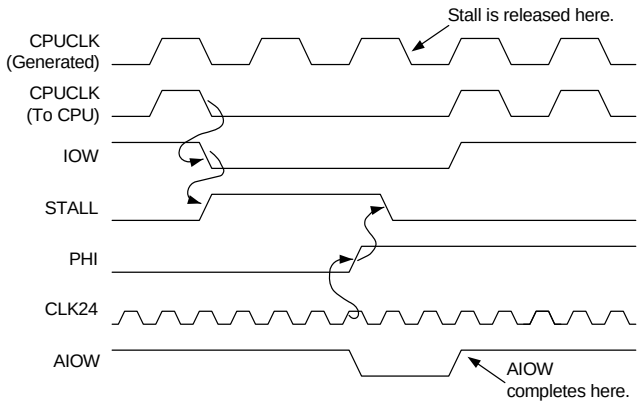

As an alternative to stalling, the source for the analog column interrupts is set as the falling edge of the PHI2 clock. This configuration synchronizes the CPU to perform the I/O write after the PHI2 phase is completed, which is equivalent to the start of PHI1.

18.2 Application Description

18.2.1 SAR Hardware Acceleration

Note This is different from the dedicated SAR10 block. Using the SAR10 block is recommended if a SAR ADC is needed.

The Successive Approximation Register (SAR) ***algorithm*** is a binary search on the Digital-to-Analog Converter (DAC) code that best matches the input voltage that is being measured. The first step is to take an initial guess at mid-scale, which effectively splits the range by half. The DAC output value is then compared to the input voltage. If the guess is too low, a result bit is set for that binary position and the next guess is set at mid-scale of the remaining upper range. If the guess is too high, a result bit is cleared and the next guess is set at mid-scale of the remaining lower range. This process is repeated until all bits are tested. The resulting DAC code is the value that produces an output voltage closest to the input voltage. This code should be within one LSb of the input voltage.

The successive approximation analog-to-digital algorithm requires the following building blocks: a DAC, a comparator, and a method or apparatus to sequence successive writes to the DAC based on the comparator output. The SAR hardware accelerator represents a trade off between a fully automatic hardware sequencing approach and a pure firmware approach.

18.2.1.1 Architectural Description

The architectural description for the SAR hardware accelerator is illustrated in Figure 18-5.

Figure 18-5. SAR Hardware Accelerator

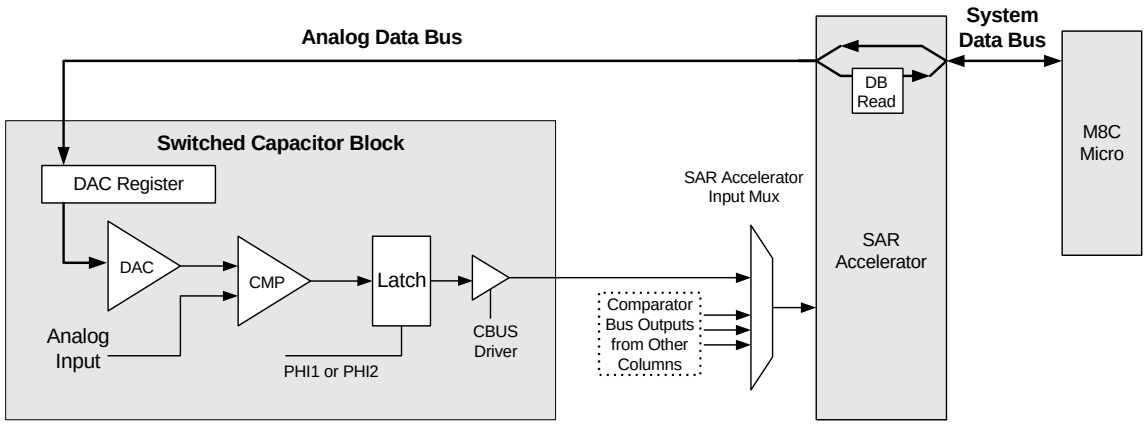

As shown in Figure 18-5, the SAR accelerator hardware is interfaced to the analog array through the comparator output and the analog array data bus. To create DAC output, values are written directly to the ACAP field in the DAC register. To facilitate the sequencing of the DAC writes in the SAR algorithm, the M8C is programmed to do a sequence of READ, MODIFY, and WRITE instructions. This is an atomic operation that consists of an I/O read (IOR) followed closely by an I/O write (IOW). One example of an assembly level instruction is as follows.

```
OR reg[DAC_REG],0
```

The effect of this instruction is to read the DAC register and follow it closely in time by a write back. The OR instruction does not modify the read data (it is ORed with ‘0’). The CPU does not need to do any additional computation in conjunction with this procedure. The SAR hardware transparently does the data modification during the read portion of the cycle. The only purpose for executing this instruction is to initiate a read that is modified by the SAR hardware, then to follow up with a write that transfers the data back to the DAC register.

During each I/O read operation, the SAR hardware overrides two bits of the data:

- To correct the previous bit guess based on the current comparator value.
- To set the next guess (next least significant bit).

The CPU latches this SAR modified data, ORs it with ‘0’ (no CPU modification), and writes it back to the DAC register. A counter in the SAR hardware is used to decode which bits are being operated on in each cycle. In this way, the capability of the CPU and the IOR/IOW control lines are used to implement the read and write. Use the SAR accelerator hardware to make the decisions and to control the values written, achieving the optimal level of performance for the current system.

The SAR hardware is designed to process six bits of a result in a given sequence. A higher resolution SAR is implemented with multiple passes.

18.2.1.2 Application Description

There are a number of ways to map a SAR6 module into the analog array. A SAR6 can be created from 1 SC block, 2 SC blocks, or 1 SC block and 1 CT block. In the following example, the programming, the clock selection, connectivity, inputs, of a two block SAR6 will be demonstrated.

This type of SAR6 is made up of 1 SC block that operates as a DAC6, and 1 SC block that operates as a voltage summer and comparator. The 2 block SAR6 is placed in column 0 as shown in Figure 18-6.

Figure 18-6. SAR6 Module Example

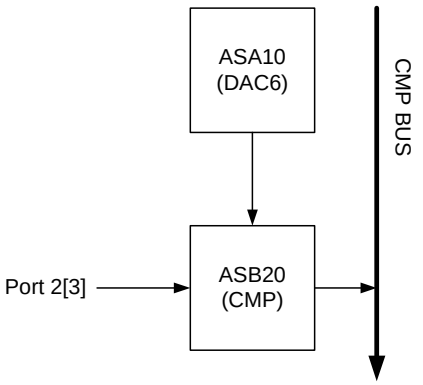

The programming for the DAC6 block is as follows:

```
CR0:  mov reg[ASC10CR0], a0h
       // Full Feedback, ACap Value = >
       // Start with Sign = 1
CR1:  mov reg[ASC10CR1], 40h
       // Select REFHI for DAC function
CR2:  mov reg[ASC10CR2], a0h
       // OBUS ON, Auto-Zero ON
CR3:  mov reg[ASC10CR3], 33h
       // Feedback ON, Power ON
```

The programming for the SUMMING/COMPARATOR block is as follows:

```
CR0:  mov reg[ASD20CR0], bfh
       // Full Feedback, Sign = 1, ACap = 31
CR1:  mov reg[ASC20CR1], 3fh
       // A Input = P2_3, BCap = 31
CR2:  mov reg[ASC20CR2], 60h
       // Cmp Bus ON, Auto Zero ON
CR3:  mov reg[ASC20CR3], 17h
       // Feedback OFF, B Input = North
```

Firmware Support Examples

In addition to the use of the OR instruction to sequence the algorithm, there are some minimal setup requirements. The SAR control bits are in the ASY_CR register. The definition of these bits as related to the SAR are as follows.

Bits [2:1] Column Select for the SAR Comparator Input

The DAC portion of the SAR can reside in any of the appropriate positions in the analog PSOC block array. However, when the COMPARATOR block is positioned (and it is possible to have the DAC and COMPARATOR in the same block), this should be the column selected.

Bit [3] Sign Selection

This bit optionally inverts the comparator input to the SAR accelerator. It must be set based on the type of PSOC block configuration selected. Some typical examples are listed in Table 18-3.

Table 18-3. Example SAR Configuration

Configuration	Description	Sign
SAR6 – 2 block	1 DAC6, 1 COMP (can be CT)	0
SAR6 – 1 block	1 for both DAC6 and COMP	1
MS SAR10 –3 blocks	1 DAC9, 1 COMP (can be CT) (when processing MS DAC block)	0
LS SAR10 – 3 blocks	1 DAC9, 1 COMP (can be CT) (when processing LS DAC block)	1

Bits [6:4] SAR Count Value

These three bits are used to initialize a 3-bit counter to sequence the 6 bits of the SAR algorithm. Typically, the user initializes this register to ‘6’. When these bits are any value other than ‘0’, an IOR command to an SC block is assumed to be part of a SAR sequence.

Assuming the comparator bus output is programmed for column 0, a typical firmware sequence is as follows.

```
mov  reg[ASY_CR], 60h // SAR count value=6,
                      // Sign=0, Col=0
or reg[ASC10CR0], 0 // Check sign, set bit 4
or reg[ASC10CR0], 0 // Check bit 4, set bit 3
or reg[ASC10CR0], 0 // Check bit 3, set bit 2
or reg[ASC10CR0], 0 // Check bit 2, set bit 1
or reg[ASC10CR0], 0 // Check bit 1, set bit 0
or reg[ASC10CR0], 0 // Check bit 0
```

SAR6 Calculation Example

This example assumes an input voltage level (VIn) of 3.0 V on the PSoC input pin. The selection is made of +/- VREF for the DAC references. Assuming VREF = 1.25, the input range will be from 1.25 to 3.75 volts. The 6-bit DAC will yield a sign magnitude result with 64 discrete values, thus giving 39 mV of resolution over the input range.

With 3.0 V input, the expected magnitude of the result is (3.0-2.5)/1.25 * 32 = 12.8. The expected sign of the result is ‘0’, meaning positive; therefore, the result is Sign=0, Magnitude=12 or 13. The error in this basic SAR algorithm is always less than one LSb in the final result.

Table 18-4 shows the sequence of calculations which correspond to the six OR instructions.

The final result of the computation is:

Sign = 1 and Magnitude = 011000 or 12.

To represent the true sign of the input voltage, you must invert the sign of the result from the DAC register. Therefore the result becomes Sign = 0, Magnitude = 12 which is (3.75 – 2.5)/32 * 12 + 2.5 = 2.96875. The error is 31.25 mV, or less that one LSb of 39 mV.

Table 18-4. SAR Sequence Example

Step	Current ACap	VIn	VDac	VSum	Comparator Bus (CMP)	New ACap	Comment
1	100000	3.0	2.5	2.75	0	110000	**Keep** the sign bit and set bit 4.
2	110000	3.0	1.875	2.4375	1	101000	**Overshoot**, clear bit 4, set bit 3.
3	101000	3.0	2.1875	2.59375	0	101100	**Keep** bit 3, and set bit 2.
4	101100	3.0	2.03125	2.515625	0	101110	**Keep** bit 2, and set bit 1.
5	101110	3.0	1.953125	2.4765625	1	101101	**Overshoot**, clear bit 1, set bit 0.
6	101101	3.0	1.992188	2.496094	1	101100	**Overshoot**, clear bit 0
	101100	3.0	2.03125	2.515625	0	101100	Final Result

Notes

1. VSum is the voltage at the summing node, that is, the input to the comparator.
2. VDac is the voltage generated by the DAC block from the ACap value.
3. When VSum > AGND, CMP = 0; when VSum < AGND, CMP = 1.
4. CMP = 0 means keep the bit (undershoot); CMP = 1 means clear the bit (overshoot).
5. Start with Sign = 1 (configuration programming), equivalent to setting that bit to test.

As shown in Table 18-4, the value of the result from Step 5, Magnitude = 13, is closer to the actual value of 12.8. This demonstrates that even though it is possible that the resulting code can be closer to the actual value, in the SAR algorithm there is no provision to detect this. The result is a maximum theoretical error of less than one LSb.

Implementing Higher Resolution SARs

It is straightforward to implement higher resolution SARs using the SAR hardware accelerator. For example, to create an 11-bit SAR, 3 blocks are allocated: 2 SC blocks to make a DAC9 and one SC or CT block for summing and compare.

To get the results of the most significant (MS) block, which is the first 6 bits (Sign and 5 bits of Magnitude), the firmware sequencing will proceed exactly as in the previous SAR6 example.

The trick with the least significant (LS) block of the DAC9 is to get the sign right. For the output to be correct, the sign of the LS block of a DAC9 should be opposite to that of the MS block (because it is connected through an inverting input to the MS block).

There are two possible ways to handle this.

1. In firmware, one can manually compute what the sign bit should be from the result in the MS block and write it to the LS block. Then the SAR count value should be set to 5 instead of 6 to skip the sign bit check.
2. An interesting property of the SAR algorithm is that the resulting voltage at the summing node after the first 6 steps (MS block processing) is going to be the same polarity (above or below AGND) as the input voltage. The reason for this is that, by definition, if the polarity of the summing voltage is opposite to that of the input voltage, this triggers a Clear of the previous bit set. By definition, the final result of the summing voltage is less than one LSb from AGND; therefore, clearing the LSb will result in a summing voltage of the same polarity as the input voltage.

According to number 2 above, the sign bit of the LS block can be handled exactly as the sign bit of the MS block, just another OR instruction. This sequence is then appended on the above MS processing sequence (substituting the LS DAC block address for <LS_CR0>). Note that the meaning of the comparator is inverted by setting the SIGN bit in the ASYNC Control register. This is because the LS block is inverted with respect to the MS block.

```
mov  reg[ASY_CR], 68h// SAR count value=6,
                     // Sign=1, Col=0

or reg[<LS_CR0>], 0  // Check sign, set bit 4
or reg[<LS_CR0>], 0  // Check bit 4, set bit 3
or reg[<LS_CR0>], 0  // Check bit 3, set bit 2
or reg[<LS_CR0>], 0  // Check bit 2, set bit 1
or reg[<LS_CR0>], 0  // Check bit 1, set bit 0
or reg[<LS_CR0>], 0  // Check bit 0
```

18.2.1.3 SAR Timing

Another important function of the SAR hardware is to synchronize the I/O read (the point at which the comparator value is used to make the SAR decision) to when the analog comparator bus is valid. Under normal conditions, this point is at the rising edge of PHI1 for the previous compute cycle. When the OR instruction is executed in the CPU, a few CPU clocks cycle into the instruction and an IOR signal is asserted to initiate a read of the DAC register. The SAR hardware then stalls the CPU clock, for one 24 MHz clock cycle after the rising edge of PHI1. When the stall is released, the I/O Read completes and is immediately followed by an I/O write. In this sequence of events, the DAC

register is written with the new value within a few CPU clocks after PHI1.

The rising edge of PHI1 is also the optimal time to write the DAC register for maximum settling time. The timing from the positive edge of PHI1 to the start of the I/O write is 4.5 clocks, which at 24 MHz is 189 ns. If the analog clock is running at 1 MHz, this allows over 300 ns for the DAC output and comparator to settle.

Figure 18-7. General SAR Timing

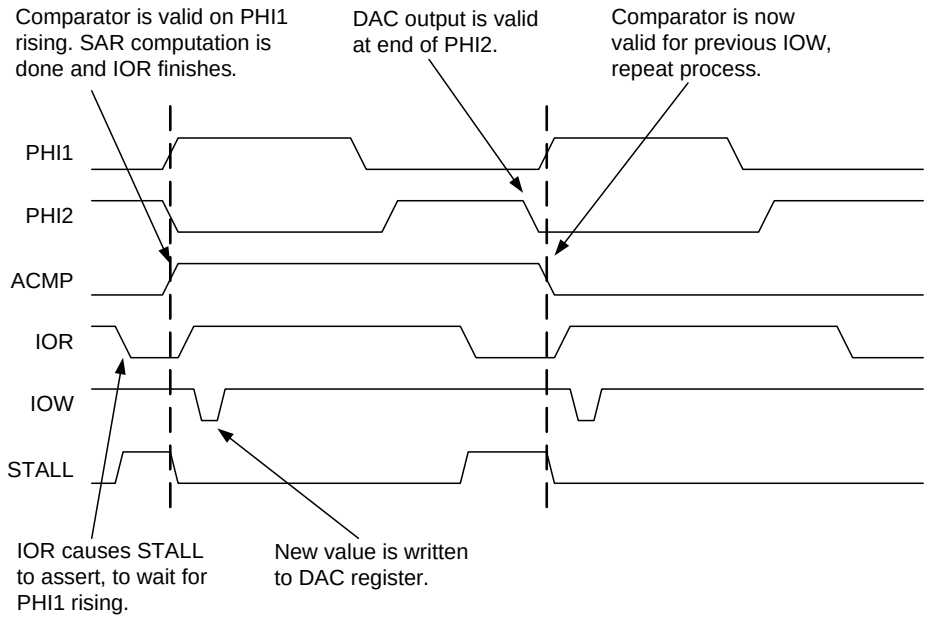

18.3 Register Definitions

The following registers are associated with the Analog Interface and are listed in address order. Each register description has an associated register table showing the bit structure for that register. For a complete table of analog interface registers, refer to the "Summary Table of the Analog Registers" on page 389.

Depending on how many analog columns your PSoC device has (see the Cols. column in the register tables below), only certain bits are accessible to be read or written (refer to the table titled "PSoC Device Characteristics" on page 387). The bits that are grayed out throughout this manual are reserved bits and are not detailed in the register descriptions that follow. Reserved bits should always be written with a value of '0'.

18.3.1 CLK_CR3 Register

Address	Name	Bit 7	Bit 6	Bit 5	Bit 4	Bit 3	Bit 2	Bit 1	Bit 0	Access
0,62h	CLK_CR3					SYSDIR[3:0]				RW : 00

The Analog Clock Source Control Register 3 (CLK_CR3) is used to select the clock source for an individual analog column.

Bits 3 to 0: SYSDIR[3:0] . When the corresponding bit is 1, then the associated ACC column's clock source is SYSCLK. Otherwise it follows the setting of the CLK_CR0 register.

For additional information, refer to the CLK_CR3 register on page 147.

18.3.2 CMP_CR0 Register

Add.	Name	Cols.	Bit 7	Bit 6	Bit 5	Bit 4	Bit 3	Bit 2	Bit 1	Bit 0	Access
0,64h	CMP_CR0	4	COMP[3:0]				AINT[3:0]				# : 00
		2			COMP[1:0]				AINT[1:0]		

#: Access is bit specific. Refer to the Register Details chapter on page 125.

The Analog Comparator Bus Register 0 (CMP_CR0) is used to poll the analog column comparator bits and select column interrupts.

This register contains two fields: COMP and AINT. By default, the interrupt is the comparator bit. A rising edge on a comparator bit causes an interrupt to be registered. However, if a bit in this field is set, the interrupt input for that column will be derived from the falling edge of PHI2 clock for that column (that is, the falling edge of PHI2 will leave a rising interrupt signal). Firmware can use this capability to synchronize to the current column clock.

Bits 7 to 4: COMP[x]. These bits are the read only bits corresponding to the comparator bits in each analog column. They are synchronized to the column clock, and thus may be reliably polled by the CPU.

Bits 3 to 0: AINT[x]. These bits select the interrupt source for each column, as the input to the interrupt controller.

Note In PSoC devices with less than four columns, the comparator signal for each un-implemented column is tied to logic zero.

For additional information, refer to the CMP_CR0 register on page 149.

18.3.3 ASY_CR Register

Add.	Name	Cols.	Bit 7	Bit 6	Bit 5	Bit 4	Bit 3	Bit 2	Bit 1	Bit 0	Access
0,65h	ASY_CR	4, 2		SARCNT[2:0]			SARSIGN	SARCOL[1:0]		SYNCEN	RW : 00

The Analog Synchronization Control Register (ASY_CR) is used to control SAR operation, except for bit 0, SYNCEN.

SYNCEN is associated with analog register write stalling and is described in “Analog Synchronization Interface (Stalling)” on page 396.

The SAR hardware accelerator is a block of specialized hardware designed to sequence the SAR algorithm for efficient analog-to-digital conversion. A SAR ADC is implemented conceptually with a DAC of the desired precision and a comparator. This functionality is configured from one or more PSoC blocks. For each conversion, the firmware should initialize the ASY_CR register and set the sign bit of the DAC as the first guess in the algorithm. A sequence of OR instructions (read, modify, write) to the ASxxxCR0 register is then executed. Each of these OR instructions causes the SAR hardware to read the current state of the comparator, checking the validity of the previous guess. It either clears it or leaves it set, accordingly. The next LSb in the DAC register is also set as the next guess. Six OR instructions will complete the conversion of a 6-bit DAC. The resulting DAC code, which matches the input voltage to within one LSb, is then read back from the ASxxxCR0 register.

Bits 6 to 4: SARCNT[2:0]. These bits are the SAR count value and are used to initialize a three-bit counter to sequence the six bits of the SAR algorithm. Typically, the user initializes this register to ‘6’. When these bits are any value other than ‘0’, a register read command to an SC block is assumed to be part of a SAR sequence.

Assuming the comparator bus output is programmed for column 0, a typical firmware sequence is as follows.

```
mov  reg[ASY_CR], 60h  // SAR count value=6,
                       // Sign=0, Col=0
or reg[ASC10CR0], 0    // Check sign, set bit 4
or reg[ASC10CR0], 0    // Check bit 4, set bit 3
or reg[ASC10CR0], 0    // Check bit 3, set bit 2
or reg[ASC10CR0], 0    // Check bit 2, set bit 1
or reg[ASC10CR0], 0    // Check bit 1, set bit 0
or reg[ASC10CR0], 0    // Check bit 0
```

Bit 3: SARSIGN. This bit is the SAR sign selection and optionally inverts the comparator input to the SAR accelerator. It must be set based on the type of PSoC block configuration selected. Table 18-5 lists some typical examples.

Table 18-5. Typical PSOC Block Configurations

Configuration	Description	Sign
SAR6 – 2 blocks	1 DAC6, 1 COMP (can be CT)	0
SAR6 – 1 block	DAC6 and COMP in 1 block	1
MS SAR10 – 3 blocks	1 DAC9, 1 COMP (can be CT) (when processing MS DAC block)	0

Bits 2 and 1: SARCOL[1:0]. These bits are the column select for the SAR comparator input. The DAC portion of the SAR can reside in any of the appropriate positions in the analog PSOC block array. However, when the COMPARATOR block is positioned (and it is possible to have the DAC and COMPARATOR in the same block), this position should be the column selected.

Bit 0: SYNCEN. This bit is to synchronize CPU data writes to Switched Capacitor (SC) block operation in the analog array. The SC block clock is selected in the CLK_CR0 register. The selected clock source is divided by four and the output is a pair of two-phase, non-overlapping clocks: PHI1 and PHI2. There is an optimal time, with respect to the PHI1 and PHI2 clocks, to change the capacitor configuration in the SC block, which is typically the rising edge of PHI1. This is normally the time when the input branch capacitor is charging.

When this bit is set, any write to an SC block register is stalled until the rising edge of the next PHI1 clock phase, for the column associated with the SC block address. The stalling operation is implemented by suspending the CPU clock. No CPU activity occurs during the stall, including interrupt processing. Therefore, the effect of stalling on CPU throughput must be considered.

For additional information, refer to the ASY_CR register on page 150.

18.3.4 CMP_CR1 Register

Add.	Name	Cols.	Bit 7	Bit 6	Bit 5	Bit 4	Bit 3	Bit 2	Bit 1	Bit 0	Access
0,66h	CMP_CR1	4	CLDIS[3]	CLDIS[2]	CLDIS[1]	CLDIS[0]					RW : 00
		2			CLDIS[1]	CLDIS[0]			CLK1X[1]	CLK1X[0]	

The Analog Comparator Bus Register 1 (CMP_CR1) is used to override the analog column comparator synchronization.

Bits 7 to 4: CLDIS[x]. When these bits are set, the given column is not synchronized to PHI2 in the analog interface. This capability is typically used to allow a continuous time comparator result to propagate directly to the interrupt controller during sleep. Because the master clocks (except the 32-kHz clock) are turned off during sleep, the synchronizer must be bypassed.

Bits 1 and 0: CLK1X[1:0]. These bits are only used by the CY8C24x94 and CY7C64215 PSoC devices. When these bits are set for a given column, the analog comparator synchronization is implemented using the direct 1X column clock, rather than the divide by 4 PHI2 clock. This allows for high frequency comparator sampling.

For additional information, refer to the CMP_CR1 register on page 151.

18.3.5 DEC_CR0 Register

Add.	Name	Cols.	Bit 7	Bit 6	Bit 5	Bit 4	Bit 3	Bit 2	Bit 1	Bit 0	Access
0,E6h	DEC_CR0	4, 2	ACC_IGEN[3:0]				ICLKS[0]	ACE_IGEN[1:0]		DCLKS0	RW : 00

The Decimator Control Register 0 (DEC_CR0) contains control bits to access hardware support for both the Incremental ADC and the DELISG ADC.

This register can only be used with four and two analog column PSoC devices.

Bits 7 to 4: ACC_IGEN[3:0]. For incremental support, these bits select which column comparator bit will be gated by the output of a digital block. The output of that digital block is typically a PWM signal; the high time of which corresponds to the ADC conversion period. This ensures that the comparator output is only processed for the precise conversion time. The digital block selected for the gating function is controlled by ICLKS0 in this register, and ICLKS3, ICLKS2 and ICLKS1 bits in the DEC_CR1 register.

Bit 3: ICLKS0. In conjunction with ICLKS1, ICLKS2, and ICLKS3 in the DEC_CR1 register, these bits select up to one of 16 digital blocks (depending on the PSoC device resources) to provide the gating signal for an incremental ADC conversion.

Bits 2 and 1: ACE_IGEN[1:0]. For incremental support, these bits select which type E column comparator bit will be gated by the output of a digital block. The output of that digital block is typically a PWM signal, the high time of which corresponds to the ADC conversion period. This ensures that the comparator output is only processed for the precise conversion time. The digital block selected for the gating function is controlled by ICLKS[3:0]

Bit 0: DCLKS0. The decimator requires a timer signal to sample the current decimator value to an output register that may subsequently be read by the CPU. This timer period is set to be a function of the DELSIG conversion time and may be selected from up to one of twelve digital blocks (depending on the PSoC device resources) with DCLKS0 in this register and DCLKS3, DCLKS2, and DCLKS1 in the DEC_CR1 register. If the Decimation Rate bits are set in DECx_CR this setting is overwritten

For additional information, refer to the DEC_CR0 register on page 212.

18.3.6 DEC_CR1 Register

Address	Name	Cols.	Bit 7	Bit 6	Bit 5	Bit 4	Bit 3	Bit 2	Bit 1	Bit 0	Access
0,E7h	DEC_CR1	4		IDEC	ICLKS3	ICLKS2	ICLKS1	DCLKS3	DCLKS2	DCLKS1	RW : 00
		2		IDEC	ICLKS3	ICLKS2	ICLKS1	DCLKS3	DCLKS2	DCLKS1	RW : 00

The Decimator Control Register 1 (DEC_CR1) is used to configure the decimator prior to using it.

This register can only be used with four and two analog column PSoC devices.

Depending on how many analog columns your PSoC device has (see the Cols. column in the register table above), only certain bits are accessible to be read or written.

Bit 6: IDEC. Any function using the decimator requires a digital block timer to sample the current decimator value. Normally, the positive edge of this signal causes the decimator output to be sampled. However, when the IDEC bit is set, the negative edge of the selected digital block input causes the decimator value to be sampled.

Bits 5 to 0: ICLKSx and DCLKSx. The ICLKS3, ICLKS2, ICLKS1, DCLKS3, DCLKS2, and DCLKS1 bits in this register select the digital block sources for Incremental and DELSIG ADC hardware support (see the DEC_CR0 register).

For additional information, refer to the DEC_CR1 register on page 213.

18.3.7 CLK_CR0 Register

Add.	Name	Cols.	Bit 7	Bit 6	Bit 5	Bit 4	Bit 3	Bit 2	Bit 1	Bit 0	Access
1,60h	CLK_CR0	4	AColumn3[1:0]		AColumn2[1:0]		AColumn1[1:0]		AColumn0[1:0]		RW : 00
		2					AColumn1[1:0]		AColumn0[1:0]		

The Analog Clock Source Control Register 0 (CLK_CR0) is used to select the clock source for an individual analog column.

An analog column clock generator is provided for each column. The bits in this register select the source for each column clock generator, depending on how many analog columns are supported in your PSoC device. Regardless of the source selected, the input clock is divided by four to generate the PHI1/PHI2 non-overlapping clocks for the column.

There are four selections for each clock: VC1, VC2, ACLK0, and ACLK1. VC1 and VC2 are the programmable global system clocks. ACLK0 and ACLK1 sources are each selected from up to one of twelve digital block outputs (functioning as clock generators), for four and two analog column devices, and up to one of four digital block outputs (functioning as clock generators), for one analog column device as selected by CLK_CR1.

Bits 7 and 6: AColumn3[1:0]. These bits select the source for analog column 3.

Bits 5 and 4: AColumn2[1:0]. These bits select the source for analog column 2.

Bits 3 and 2: AColumn1[1:0]. These bits select the source for analog column 1.

Bits 1 and 0: AColumn0[1:0]. These bits select the source for analog column 0.

For additional information, refer to the CLK_CR0 register on page 236.

18.3.8 CLK_CR1 Register

Add.	Name	Cols.	Bit 7	Bit 6	Bit 5	Bit 4	Bit 3	Bit 2	Bit 1	Bit 0	Access
1,61h	CLK_CR1	4, 2		SHDIS	ACLK1[2:0]			ACLK0[2:0]			RW : 00

The Analog Clock Source Control Register 1 (CLK_CR1) is used to select the clock source for an individual analog column.

This register can only be used with four and two column PSoC devices.

Bit 6: SHDIS. The SHDIS bit functions as follows. During normal operation of an SC block, for the amplifier of a column enabled to drive the output bus, the connection is only made for the last half of PHI2. (During PHI1 and for the first half of PHI2, the output bus floats at the last voltage to which it was driven.) This forms a sample and hold operation using the output bus and its associated ***capacitance***. This design prevents the output bus from being perturbed by the intermediate states of the SC operation (often a reset state for PHI1 and settling to the valid state during PHI2).

The following are the exceptions: 1) If the ClockPhase bit in ASCxx_CR0 (for the SC block in question) is set to '1', then the output is enabled if the analog bus output is enabled during both PHI1 and PHI2. 2) If the SHDIS signal is set in bit 6 of the Analog Clock Source Control register, then sample and hold operation is disabled for all columns and all enabled outputs of SC blocks are connected to their respective output buses, for the entire period of their respective PHI2s.

Bits 5 to 0: ACLKx[2:0]. There are two 3-bit fields in this register that can select up to one of twelve digital blocks (depending on the PSoC device resources), to function as the clock source for ACLK0 and ACLK1. ACLK0 and ACLK1 are alternative clock inputs to the analog column clock generators (see the CLK_CR0 register above).

For additional information, refer to the CLK_CR1 register on page 237.

18.3.9 AMD_CR0 Register

Add.	Name	Cols.	Bit 7	Bit 6	Bit 5	Bit 4	Bit 3	Bit 2	Bit 1	Bit 0	Access
1,63h	AMD_CR0	4		AMOD2[2:0]				AMOD0[2:0]			RW : 00
		2						AMOD0[2:0]			

The Analog Modulation Control Register 0 (AMD_CR0) is used to select the modulator bits used with each column.

This register can only be used with four and two column PSoC devices.

The MODBIT is an input into an Switched Capacitor C Type block only and is XORed with the currently programmed value of the ASIGN bit in the CR0 register for that SC block. This allows the ACAP sign bit to be dynamically modulated by hardware signals. Three bits for each column allow a one of eight selection for the MODBIT. Sources include any of the analog column comparator buses, two global buses, and one broadcast bus. The default for this function is zero or off.

Bits 6 to 4: AMOD2[2:0]. These bits control the selection of the MODBITs for analog column 2.

Bits 2 to 0: AMOD0[2:0]. These bits control the selection of the MODBITs for analog column 0.

For additional information, refer to the AMD_CR0 register on page 239.

18.3.10 CMP_GO_EN Register

Address	Name	Bit 7	Bit 6	Bit 5	Bit 4	Bit 3	Bit 2	Bit 1	Bit 0	Access
1,64h	CMP_GO_EN	GOO5	GOO1	SEL1[1:0]		GOO4	GOO0	SEL0[1:0]		RW : 00

The Comparator Bus to Global Outputs Enable Register (CMP_GO_EN) controls options for driving the analog comparator bus and column clock to the global bus.

Bit 7: GOO5. This bit drives the selected column 1 signal to GOO5.

Bit 6: GOO1. This bit drives the selected column 1 signal to GOO1.

Bits 5 and 4: SEL1[1:0]. These bits select the column 1 signal to output.

Bit 3: GOO4. This bit drives the selected column 0 signal to GOO4.

Bit 2: GOO0. This bit drives the selected column 0 signal to GOO0.

Bits 1 and 0: SEL0[1:0]. These bits select the column 0 signal to output.

For additional information, refer to the CMP_GO_EN register on page 240.

18.3.11 CMP_GO_EN1 Register

Address	Name	Bit 7	Bit 6	Bit 5	Bit 4	Bit 3	Bit 2	Bit 1	Bit 0	Access
1,65h	CMP_GO_EN1	GOO7	GOO3	SEL3[1:0]		GOO6	GOO2	SEL2[1:0]		RW : 00

The Comparator Bus to Global Outputs Enable Register 1 (CMP_GO_EN1) controls options for driving the analog comparator bus and column clock to the global bus.

This register is only used by the CY8C28x43, CY8C28x45, and CY8C28x52 PSoC devices.

Bit 7: GOO7. This bit drives the selected column 3 signal to GOO7.

Bit 6: GOO3. This bit drives the selected column 3 signal to GOO3.

Bits 5 and 4: SEL3[1:0]. These bits select the column 3 signal to output.

Bit 3: GOO6. This bit drives the selected column 2 signal to GOO6.

Bit 2: GOO2. This bit drives the selected column 2 signal to GOO2.

Bits 1 and 0: SEL2[1:0]. These bits select the column 2 signal to output.

For additional information, refer to the CMP_GO_EN1 register on page 241.

18.3.12 AMD_CR1 Register

Add.	Name	Cols.	Bit 7	Bit 6	Bit 5	Bit 4	Bit 3	Bit 2	Bit 1	Bit 0	Access
1,66h	AMD_CR1	4		AMOD3[2:0]				AMOD1[2:0]			RW : 00
		2						AMOD1[2:0]			

The Analog Modulation Control Register 1 (AMD_CR1) is used to select the modulator bits used with each column.

This register can only be used with four and two column PSoC devices.

The MODBIT is an input into an Switched Capacitor Type C block only and is XORed with the currently programmed value of the ASIGN bit in the CR0 register for that SC block. This allows the ACAP sign bit to be dynamically modulated by hardware signals. Three bits for each column allow a one of eight selection for the MODBIT. Sources include any of the analog column comparator buses, two global buses, and one broadcast bus. The default for this function is zero or off.

Bits 6 to 4: AMOD3[2:0]. These bits control the selection of the MODBITs for analog column 3.

Bits 2 to 0: AMOD1[2:0]. These bits control the selection of the MODBITs for analog column 1.

For additional information, refer to the AMD_CR1 register on page 242.

18.3.13 ALT_CR0 Register

Add.	Name	Cols.	Bit 7	Bit 6	Bit 5	Bit 4	Bit 3	Bit 2	Bit 1	Bit 0	Access
1,67h	ALT_CR0	4, 2	LUT1[3:0]				LUT0[3:0]				RW : 00

The Analog LUT Control Register 0 (ALT_CR0) is used to select the logic function.

A one of 16 look-up table (LUT) is applied to the outputs of each column comparator bit and optionally a neighbor bit to implement two input logic functions.

Table 18-1 shows the available functions, where the A input applies to the selected column and the B input applies to the next most significant neighbor column. Column 0 settings apply to combinations of column 0 and column 1. Column 1 settings apply to combinations of column 1 and column 2, where B=0 for one column PSoC devices.

Bits 7 to 4: LUT1[3:0]. These bits control the selection of the LUT 1 logic functions that may be selected for the analog comparator bits in column 0 (for two and four column PSoC devices only) and column 1.

Bits 3 to 0: LUT0[3:0]. These bits control the selection of LUT 0 logic functions that may be selected for the analog comparator bits in column 0 (for two and four column PSoC devices only) and column 1.

For additional information, refer to the ALT_CR0 register on page 243.

18.3.14 ALT_CR1 Register

Add.	Name	Cols.	Bit 7	Bit 6	Bit 5	Bit 4	Bit 3	Bit 2	Bit 1	Bit 0	Access
1,68h	ALT_CR1	4	LUT3[3:0]				LUT2[3:0]				RW : 00

The Analog LUT Control Register 1 (ALT_CR1) is used to select the logic function performed by the LUT for each analog column.

This register can only be used with four column PSoC devices.

Bits 7 to 4: LUT3[3:0]. These bits control the selection of the LUT 3 logic functions that may be selected for the analog comparator bits.

Bits 3 to 0: LUT2[3:0]. These bits control the selection of LUT 2 logic functions that may be selected for the analog comparator bits.

For additional information, refer to the ALT_CR1 register on page 244.

18.3.15 CLK_CR2 Register

Add.	Name	Cols.	Bit 7	Bit 6	Bit 5	Bit 4	Bit 3	Bit 2	Bit 1	Bit 0	Access
1,69h	CLK_CR2	4					ACLK1R			ACLK0R	RW : 00

The Analog Clock Source Control Register 2 (CLK_CR2), in conjunction with the CLK_CR1 and CLK_CR0 registers, selects a digital block as a source for analog column clocking.

This register can only be used with four column PSoC devices.

Bit 3: ACLK1R. This bit selects bank one of eight digital blocks and is only used in devices with more than eight digital blocks.

Bit 0: ACLK0R. This bit selects bank zero of eight digital blocks and is only used in devices with more than eight digital blocks.

For additional information, refer to the CLK_CR2 register on page 245.

19. Analog Array

This chapter presents the Analog Array, which has no registers directly associated with it. This chapter is important because it discusses the block and column level interconnects that exist in the analog PSoC® array.

19.1 Architectural Description

The analog array is designed to allow interaction between PSoC devices without modifying projects, except for resource limitations.

Refer to the table at the beginning of the Analog System section, on page 383, to determine how many columns of analog PSoC blocks a particular PSoC device has. The figures that follow illustrate the analog multiplexer (mux) connections for the various PSoC devices, which vary depending on column availability.

Figure 19-1 displays the various analog arrays, depending on the column configuration of the PSoC device. Each analog column has 3 analog blocks associated with it. In the figures throughout this chapter, shading and call outs portray the different column configurations that are available in a PSoC device.

Note The CY8C28x03 and CY8C28x13 devices do not have the analog array discussed in this section. CY8C28x13, CY8C28x33, CY8C28x45, and CY8C28x52 have an array of type E limited analog blocks in addition to the array of blocks discussed in this section. See Two Column Limited Analog System chapter on page 441 for details.

Figure 19-1. Array of Analog PSoC Blocks

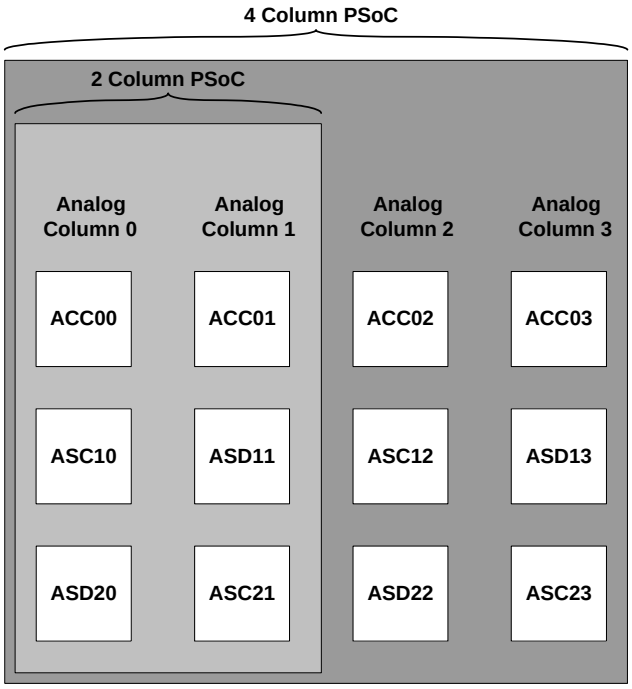

19.1.1 NMux Connections

The NMux is an 8-to-1 mux which determines the source for the inverting (also called negative) input of Continuous Time PSoC blocks. These blocks are named ACC00, ACC01, ACC02, and ACC03. More details on the Continuous Time PSoC blocks are available in the chapter Continuous Time PSoC® Block, on page 425. The NMux connections are described in detail in the ACCxxCR1 register on page 159, bits NMux[2:0].

The numbers in Figure 19-2, which are associated with each arrow, are the corresponding NMux select line values for the data in the NMux portion of the register. The call out names in the figure show nets selected for each NMux value.

For one column PSoC devices, the figure view is expanded in a circular area to the left of the main diagram, where black call outs and arrows signify exclusive one column functionality and gray call outs and arrows signify commonality with four and two column PSoC devices.

Figure 19-2. NMux Connections

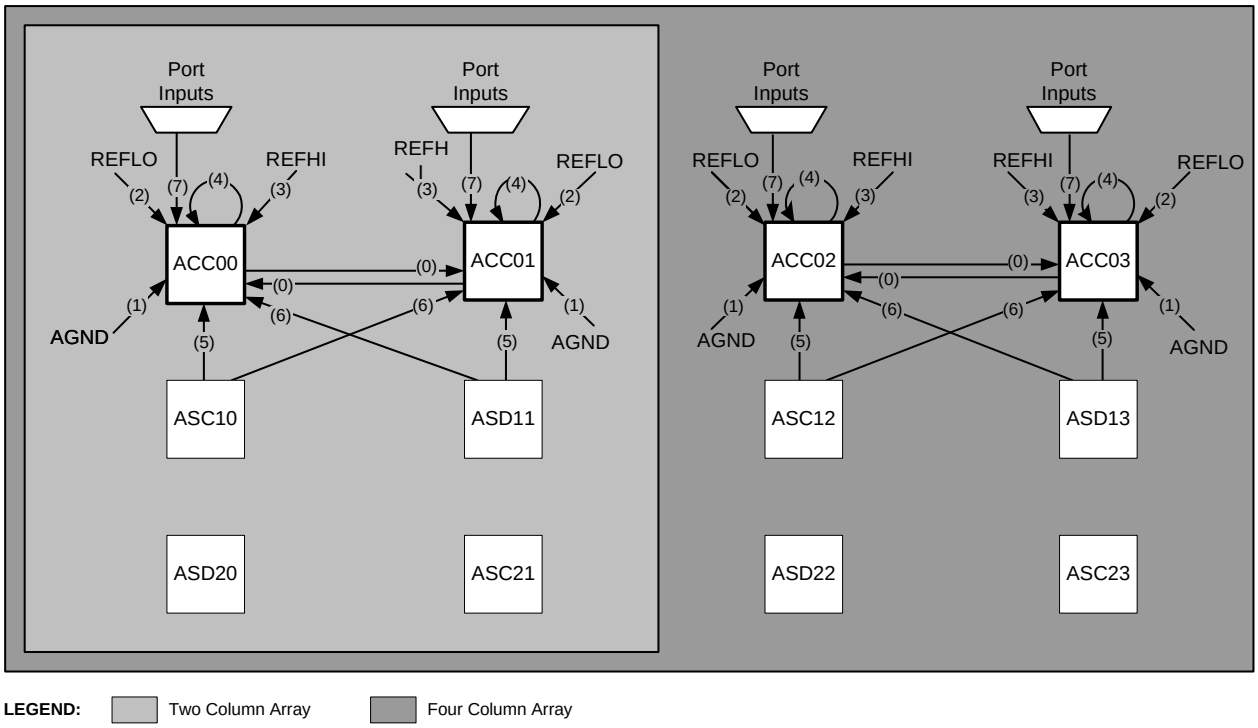

19.1.2 PMux Connections

The PMux is an 8-to-1 mux which determines the source for the non-inverting (also called positive) input of Continuous Time PSoC blocks. These blocks are named ACC00, ACC01, ACC02, and ACC03. More details on the Continuous Time PSoC blocks are available in the chapter Continuous Time PSoC® Block, on page 425. The PMux connections are described in detail in the ACCxxCR1 register on page 159, bits PMux[2:0].

The numbers in Figure 19-3, which are associated with each arrow, are the corresponding PMux select line values for the data in the PMux portion of the register. The call out names in the figure show nets selected for each PMux value.

For one column PSoC devices, the figure view is expanded in a circular area to the left of the main diagram, where black call outs and arrows signify exclusive one column functionality, and gray call outs and arrows signify commonality with four and two column PSoC devices.

Figure 19-3. PMux Connections

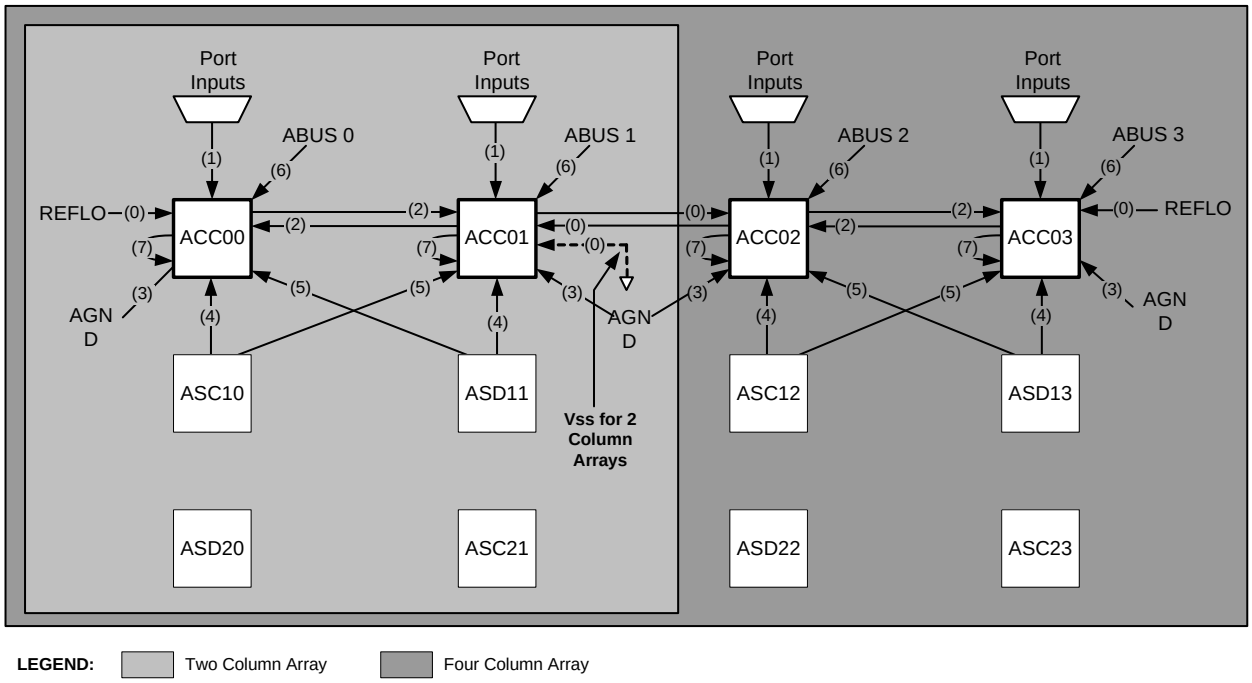

19.1.3 RBotMux Connections

The RBotMux connections in Figure 19-4 are the mux inputs for the bottom of the resistor string, see Figure 22-1 on page 426. The RBotMux connections are used in the Continuous Time PSoC blocks. These blocks are named ACC00, ACC01, ACC02, and ACC03. The RBotMux connections are described in detail in the ACCxxCR0 register on page 157, bits RBotMux[1:0].

The numbers in Figure 19-4, which are associated with each arrow, are the corresponding RBotMux select line values for the data in the RBotMux portion of the register. The call out names in the figure show nets selected for each RBotMux value.

The logic statements in Figure 19-4 are the RBotMux connections that are selected by the combination of the RBotMux bits (ACC0xCR0 bits 1 and 0) and the INSAMP bit (ACC0xCR3 bit 1). For example, the RBotMux selects a connection to AGND, if the INSAMP bit is low and the RBotMux bits are 01b. This is shown in the figure as the logic statement $INSAMP \cdot (RB = 1)$.

For one column PSoC devices, the figure view is expanded in a circular area to the left of the main diagram, where black call outs and arrows signify exclusive one column functionality, and gray call outs and arrows signify commonality with four and two column PSoC devices.

Note The RBotMux connections are not available to the CY8C28x03 and CY8C28x13 PSoC devices.

Figure 19-4. RBotMux Connections

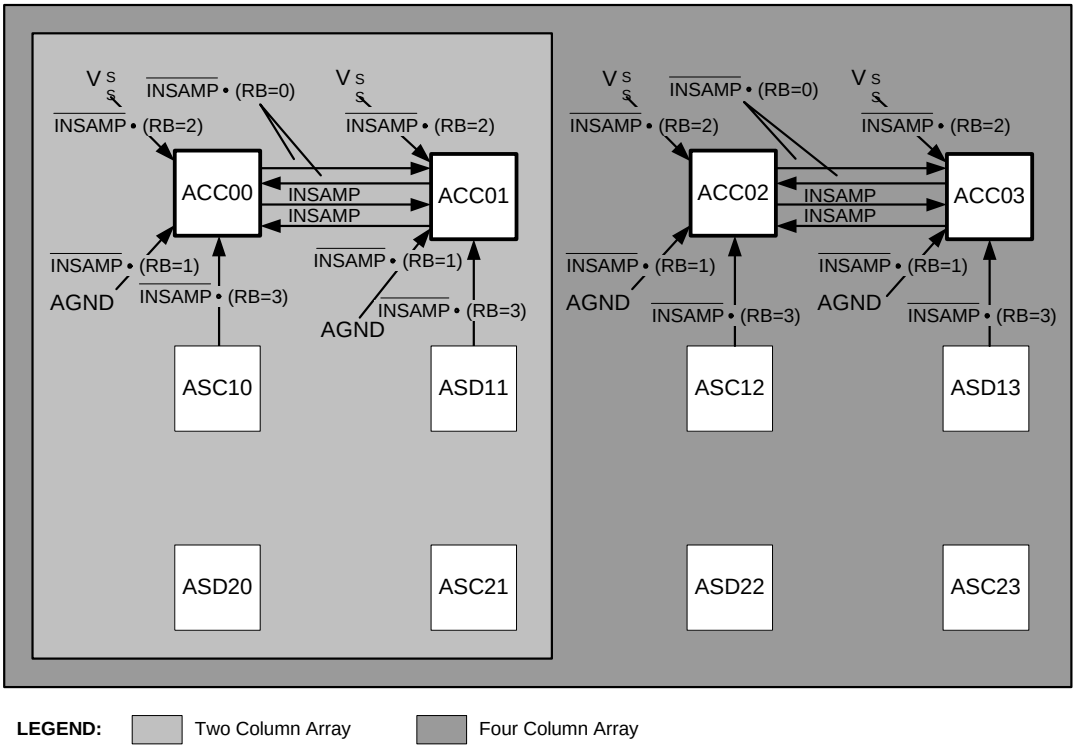

19.1.4 AMux Connections

The AMux connections in Figure 19-5 are the mux inputs for controlling both the A and C capacitor branches. The high order bit, ACMux[2], selects one of two inputs for the C branch, which is used to control both the AMux and CMux. (See the A inputs in Figure 23-1 on page 432 and Figure 23-2 on page 433.) The AMux connections are used in the Switched Capacitor PSoC blocks. These blocks are named ASC10, ASD11, ASC12, ASD13, ASD20, ASC21, ASD22, and ASC23. The AMux connections are described in detail in the ASCxxCR1 register on page 162, bits ACMux[2:0], and ASDxxCR1 register on page 166, bits AMux[2:0].

The numbers in Figure 19-5, which are associated with each arrow, are the corresponding AMux select line values for the data in the ACMux portion of the register. The call out names in the figure show nets selected for each AMux value.

For one column PSoC devices, the figure view is expanded in a circular area to the left of the main diagram, where black call outs and arrows signify exclusive one column functionality, and gray call outs and arrows signify commonality with four and two column PSoC devices.

Note The AMux connections are not available to the CY8C28x03 and CY8C28x13 PSoC devices.

Figure 19-5. AMux Connections

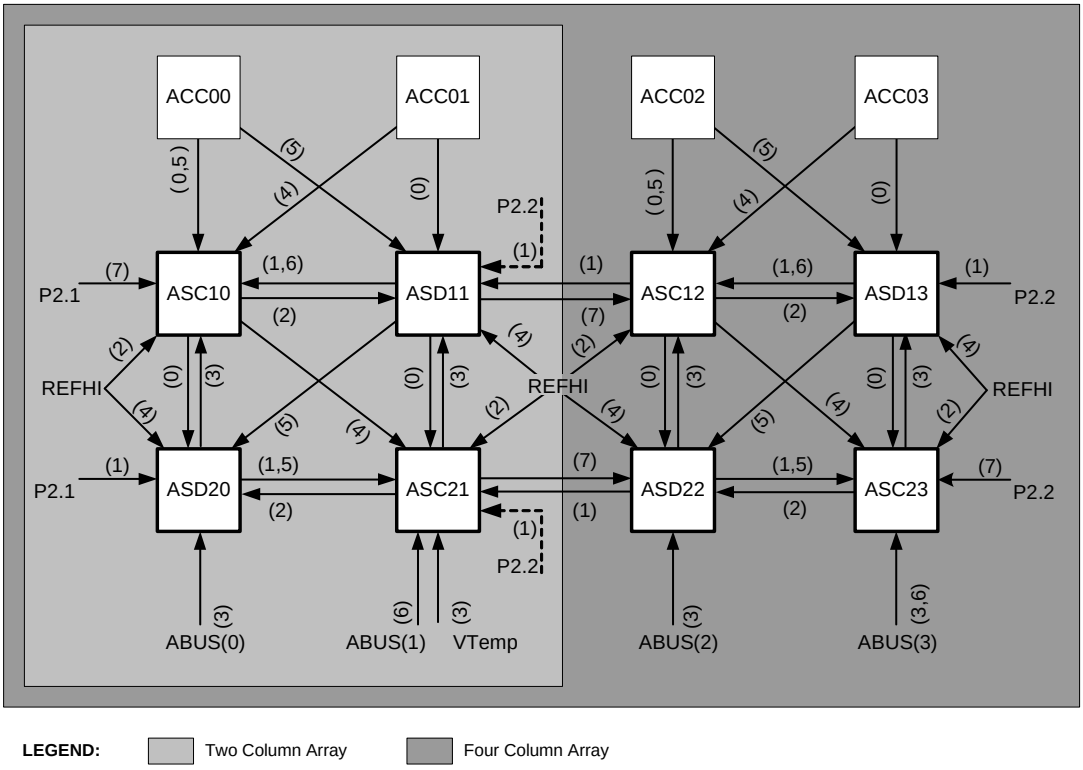

19.1.5 CMux Connections

The CMux connections in Figure 19-6 are the mux inputs for controlling the C capacitor branches. The high order bit, ACMux[2], selects one of two inputs for the C branch, which is used to control both the AMux and CMux. (See the C inputs in Figure 23-1 on page 432.) The CMux connections are used in the Switched Capacitor PSoC blocks. These blocks are named ASC10, ASC21, ASC12, and ASC23.

The CMux connections are described in detail in the ASCxxCR1 register on page 162, bits ACMux[2:0]. The numbers in the figure, which are associated with each arrow, are the corresponding CMux select line values for the data in the CMux portion of the register. The call out names in the figure show nets selected for each CMux value.

Note The CMux connections are not available to the CY8C28x03 and CY8C28x13 PSoC devices.

Figure 19-6. CMux Connections

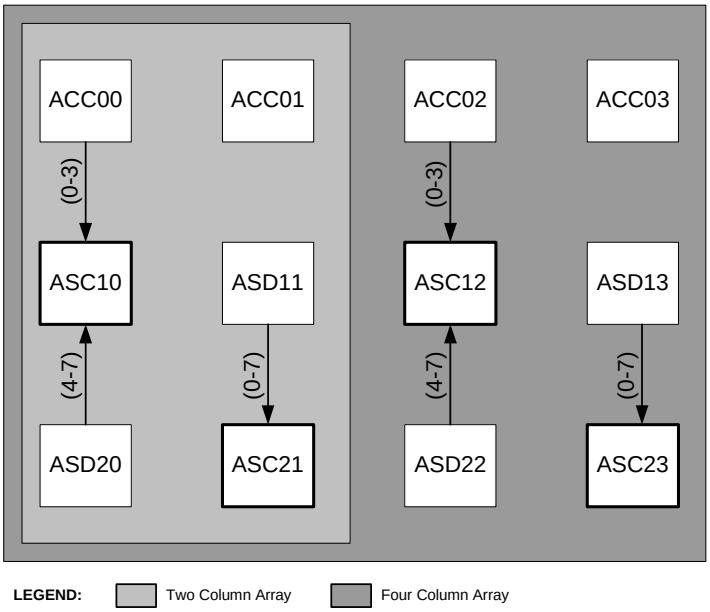

19.1.6 BMux SC/SD Connections

The BMux SC/SD connections in Figure 19-7 are the mux inputs for controlling the B capacitor branches. (See Figure 23-1 on page 432 and Figure 23-2 on page 433.) The BMux SC/SD connections are used in the Switched Capacitor PSoC blocks. These blocks are named ASC10, ASD11, ASC12, ASD13, ASD20, ASC21, ASD22, and ASC23. The BMux connections are described in detail in the ASCxxCR3 register on page 164, bits BMuxSC[1:0], and ASDxxCR3 register on page 168, bit BMuxSD[2].

The numbers in Figure 19-7, which are associated with each arrow, are the corresponding BMux select line values for the data in the BMux portion of the register. The call out names in the figure show nets selected for each BMux value.

For one column PSoC devices, the figure view is expanded in a circular area to the left of the main diagram, where black call outs and arrows signify exclusive one column functionality, and gray call outs and arrows signify commonality with four and two column PSoC devices.

Note The BMux SC/SD connections are not available to the CY8C28x03 and CY8C28x13 PSoC devices.

Figure 19-7. BMux SC/SD Connections

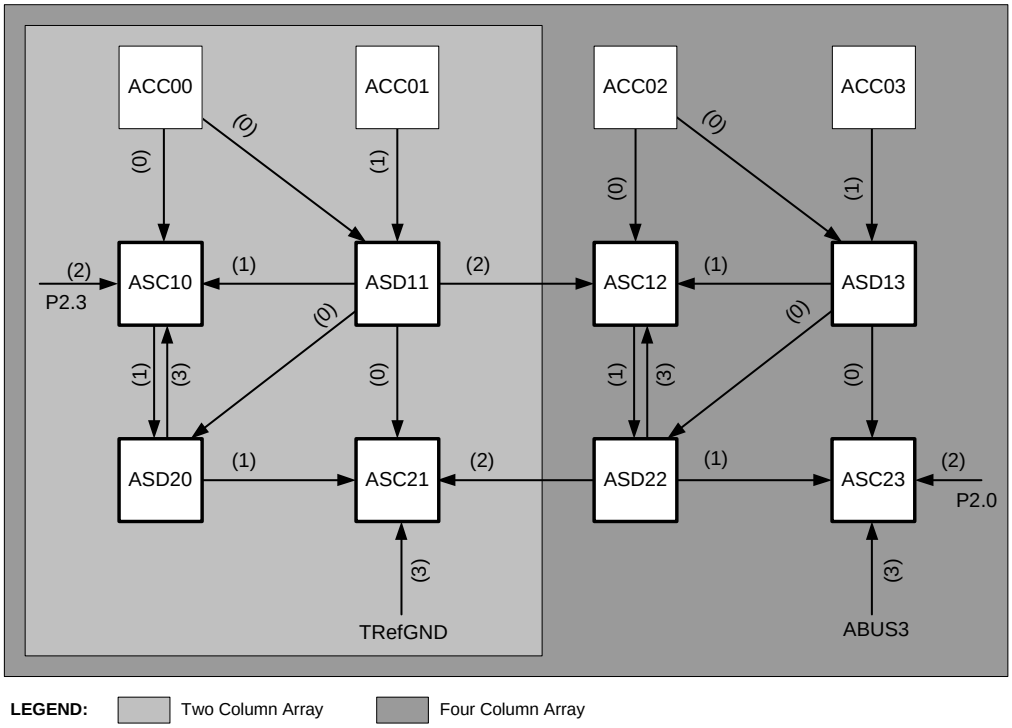

19.1.7 Analog Comparator Bus

Each analog column has a dedicated comparator bus associated with it. Every analog PSoC block has a comparator output that can drive out on this bus. However, the comparator output from only one analog block in a column can be actively driving the comparator bus for that column at any one time. Refer to the “Analog Comparator Bus Interface” on page 394 in the Analog Interface chapter for more information. Refer to the “Analog Comparator Bus Interface” on page 442 for information on the Type E analog comparator buses in the CY8C28x13, CY8C28x33, CY8C28x45, and CY8C28x52 devices.

19.2 Temperature Sensing Capability

A temperature-sensitive voltage, derived from the bandgap sensing on the die, is buffered and available as an analog input into the Analog Switch Cap Type C block ASC21. Temperature sensing allows protection of device operating ranges for fail-safe applications. Temperature sensing, combined with a long sleep timer interval (to allow the die to approximate ***ambient temperature***), can give an approximate ambient temperature for data acquisition and battery charging applications. The user may also calibrate the internal temperature rise based on a known current consumption. The temperature sensor input to the ASC21 block is labeled VTemp and its associated ground reference is labeled TRefGND.

20. Analog Input Configuration

This chapter discusses the Analog Input Configuration and its associated registers. For a complete table of analog input configuration registers, refer to the "Summary Table of the Analog Registers" on page 389. For a quick reference of all PSoC® registers in address order, refer to the Register Details chapter on page 125.

20.1 Architectural Description

Depending on which PSoC device you have (2 column or 4 column), you will use one of the three analog input configuration and arrays as illustrated with three different shaded areas in Figure 20-1. Note that the CY8C28x13 PSoC device has two column limited functionality and no output drivers.

Figure 20-2 presents a view of each analog column configuration, along with their analog driver and pin specifics.

The input multiplexer (mux) maps device inputs (package pins) to analog array columns, based on bit values in the AMX_IN and ABF_CR0 registers. Edge columns, in the four column configuration, are fed by one of two 4-to-1 muxes; inner columns are fed by one of two 4-to-1 muxes. The muxes are ***CMOS*** switches with typical resistances in the range of 2K ohms.

Refer to the analog block diagrams, on the following pages, to view the various analog input configurations. For a four analog column device, the PSoC device has four analog drivers used to output analog values on port pins P0[5], P0[3], P0[4], and P0[2]. For a two analog column device, the PSoC device has two analog drivers used to output analog values on port pins P0[5] and P0[3]. For a one analog column device, the PSoC device has one analog driver used to output analog values on port pin P0[5]. Also in the figures that follow, depending on the pin configuration of your PSoC device, various shades of gray boxes are displayed denoting which port pins are associated with which pin parts.

Figure 20-1. Analog Input Configuration Column Overview

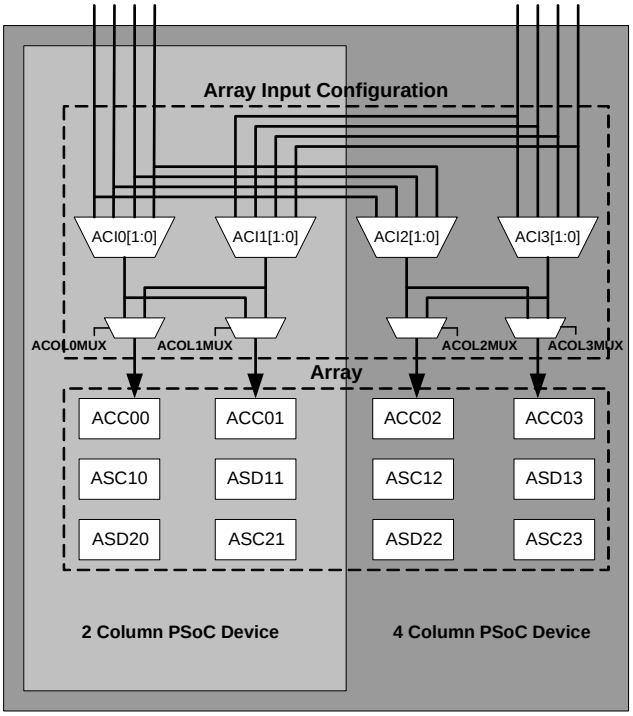

20.1.1 Six Column Analog Input Configuration

The six column analog input configuration is detailed in Figure 20-2, along with the analog driver and pin specifics.

Figure 20-2. Six Column PSoC Analog Pin Block Diagram

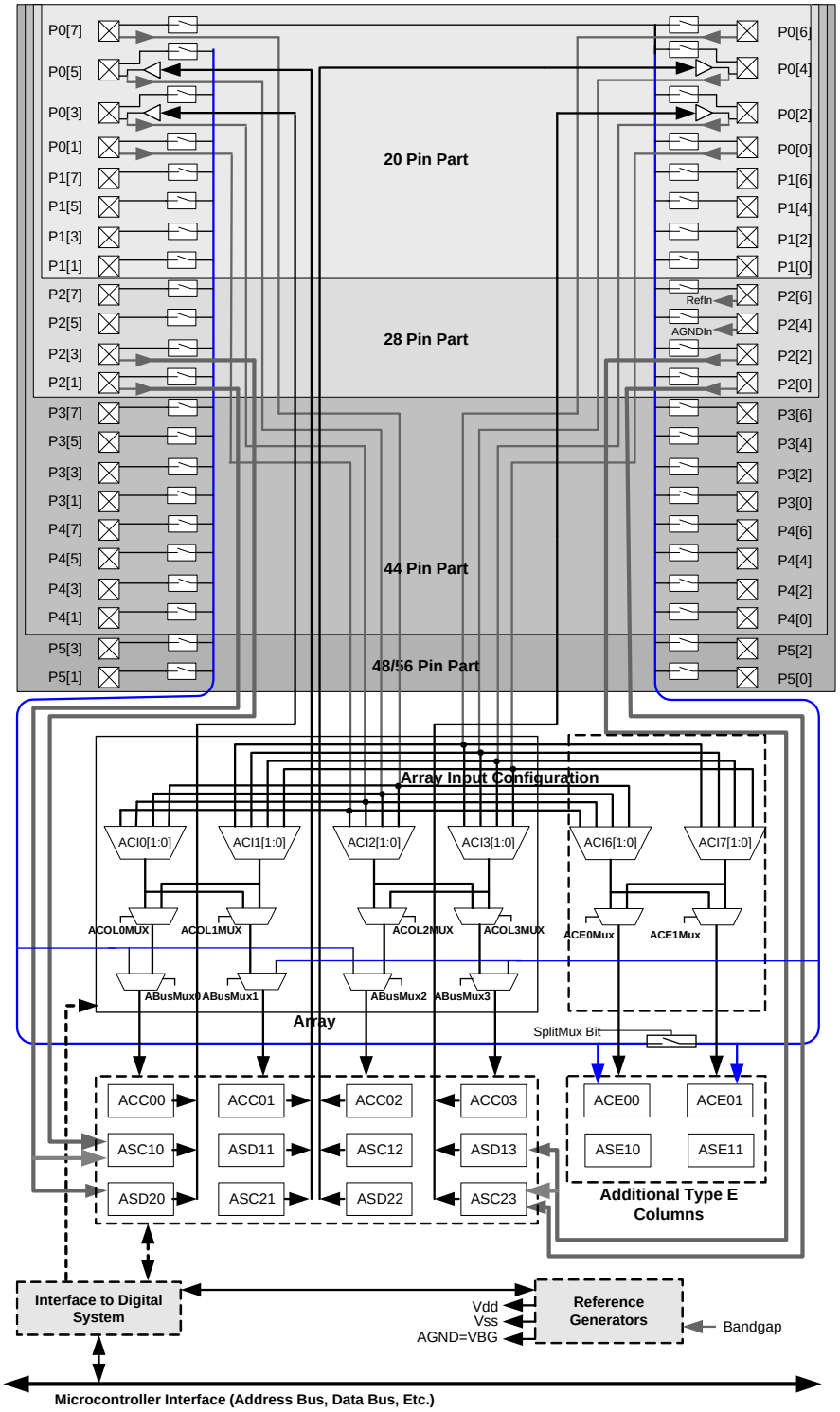

20.2 Register Definitions

The following registers are associated with Analog Input Configuration and are listed in address order. Each register description has an associated register table showing the bit structure for that register. For a complete table of the analog input configuration registers, refer to the "Summary Table of the Analog Registers" on page 389.

Depending on how many analog columns your PSoC device has (see the Cols. column in the register tables below), only certain bits are accessible to be read or written. The bits that are grayed out throughout this manual are reserved bits and are not detailed in the register descriptions that follow. Reserved bits should always be written with a value of '0'.

Note For the CY8C28x13, CY8C28x33, CY8C28x43, CY8C28x45, and CY8C28x52 PSoC devices, refer to the I/O Analog Multiplexer chapter on page 525 for information on bringing that device's analog mux bus into the analog array.

20.2.1 AMX_IN Register

Add.	Name	Cols.	Bit 7	Bit 6	Bit 5	Bit 4	Bit 3	Bit 2	Bit 1	Bit 0	Access
0,60h	AMX_IN	4	ACI3[1:0]		ACI2[1:0]		ACI1[1:0]		ACI0[1:0]		RW : 00
		2					ACI1[1:0]		ACI0[1:0]		

The Analog Input Select Register (AMX_IN) controls the analog muxes that feed signals in from port pins into the analog column.

This register can only be used with four and two column PSoC devices.

Bits 7 to 0: ACIx[1:0].

For four column PSoC devices, each of the analog columns can have up to four port bits connected to its muxed input. There are up to four additional analog inputs that go directly into the Switch Capacitor PSoC blocks.

For two column PSoC devices, the ACI1[1:0] and ACI0[1:0] bits control the analog muxes that feed signals in from port pins into the analog column. The analog column can have up to eight port bits connected to its muxed input. ACI1 and ACI0 are used to select among even and odd pins. The AC1Mux bit field controls the bits for those muxes and is located in the Analog Output Buffer Control register (ABF_CR0). There are up to two additional analog inputs that go directly into the Switch Capacitor PSoC blocks.

For additional information, refer to the AMX_IN register on page 145.

20.2.2 ABF_CR0 Register

Add.	Name	Cols.	Bit 7	Bit 6	Bit 5	Bit 4	Bit 3	Bit 2	Bit 1	Bit 0	Access
1,62h	ABF_CR0	4	ACol1Mux	ACol2Mux	ABUF1EN	ABUF2EN	ABUF0EN	ABUF3EN	Bypass	PWR	RW : 00
		2	ACol1Mux		ABUF1EN		ABUF0EN		Bypass	PWR	

The Analog Output Buffer Control Register 0 (ABF_CR0) controls analog input muxes from Port 0 and the output buffer amplifiers that drive column outputs to device pins.

Depending on the number of analog columns your PSoC device has, bits 6, 4, 3, and 2 may be reserved. Refer to the table titled “PSoC Device Distinctions” on page 25.

Bit 7: ACol1MUX. A mux selects the output of column 0 input mux or column 1 input mux. When set, this bit sets the column 1 input to column 0 input mux output.

Bit 6: ACol2MUX. A mux selects the output of column 2 input mux or column 3 input mux. When set, this bit sets the column 2 input to column 3 input mux output.

Bits 5 to 2: ABUFxEN. These bits enable or disable the column output amplifiers.

Bit 1: Bypass. Bypass mode connects the analog output driver input directly to the output. When this bit is set, all analog output drivers will be in bypass mode. This is a high impedance connection used primarily for measurement and calibration of internal references. Use of this feature is not recommended for customer designs.

Bit 0: PWR. This bit is used to set the power level of the analog output drivers. When this bit is set, all of the analog output drivers will be in a High Power mode.

For additional information, refer to the ABF_CR0 register on page 238.

20.2.3 AMUX_CFG1 Register

Address	Name	Bit 7	Bit 6	Bit 5	Bit 4	Bit 3	Bit 2	Bit 1	Bit 0	Access
1,6Ah	AMUX_CFG1	ABusMux3	ABusMux2	ACol3Mux	ACol0Mux	MUXCLK1[2:0]			EN1	RW : 0

Bit 7: ABusMux3. 0: Select analog column 3 input to analog column 3 mux output. (Selects among P0[6,4,2,0].)
1: Select analog column 3 input to the analog mux bus right.

Bit 6: ABusMux2. 0: Select analog column 2 input to analog column 2 mux output. (Selects among P0[7,5,3,1].)
1: Select analog column 2 input to the analog mux bus left.

Bit 5: ACol3Mux. 0: Select analog column 3 input to analog column 3 input mux output. (Selects among P0[6,4,2,0].)
1: Select analog column 3 input to analog column 2 input mux output. (Selects among P0[7,5,3,1].)

Bit 4: ACol0Mux. 0: Select analog column 0 input to analog column 0 input mux output. (Selects among P0[7,5,3,1].)
1: Select analog column 0 input to analog column 1 input mux output. (Selects among P0[6,4,2,0].)

Bits 3 to 1: MUXCLK1[2:0]. Selects a precharge clock source for analog mux bus right connections:
000b Precharge clock is off; no switching.
001b VC1
010b VC2
011b Row1 Broadcast
100b Analog column clock 0
101b Analog column clock 1
110b Analog column clock 2
111b Analog column clock 3

Bit 0: EN1. 0: Disable MUXCLK Right output.
1: Enable MUXCLK Right output.

For additional information, refer to the AMUX_CFG1 register on page 246.

21. Analog Reference

This chapter discusses the Analog Reference generator and its associated register. The reference generator establishes a set of three internally fixed reference voltages for AGND, RefHi, and RefLo. For PSoC® devices with one analog column, a fixed analog ground (AGND) of Vdd/2 is supplied. For a quick reference of all PSoC registers in address order, refer to the Register Details chapter on page 125.

21.1 Architectural Description

The PSoC device is a single supply part, with no negative voltage available or applicable. Depending on the number of analog columns in your PSoC device (refer to the table titled "PSoC Device Characteristics" on page 387), Figure 21-1 shows the analog reference control schematic.

Analog ground (AGND) is constructed near mid-supply. This ground is routed to all analog blocks and separately buffered within each block. Note that there may be a small offset voltage between buffered analog grounds. RefHi and RefLo signals are generated, buffered, and routed to the analog blocks. RefHi and RefLo are used to set the conversion range (that is, span) of ***analog-to-digital (ADC)*** and ***digital-to-analog (DAC)*** converters. RefHi and RefLo can also be used to set thresholds in comparators for four and two column PSoC devices.

The reference array supplies voltage to all blocks and current to the Switched Capacitor blocks. At higher block clock rates, there is increased reference current demand; the reference power should be set equal to the highest power level of the analog blocks used.

Figure 21-1. Analog Reference Structure

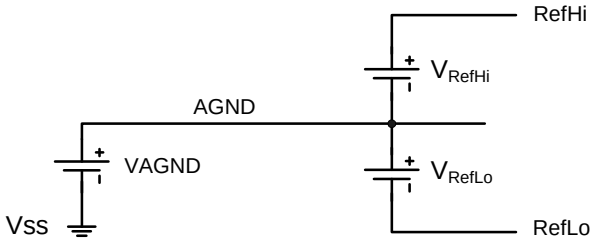

Figure 21-2. Analog Reference Control Schematic

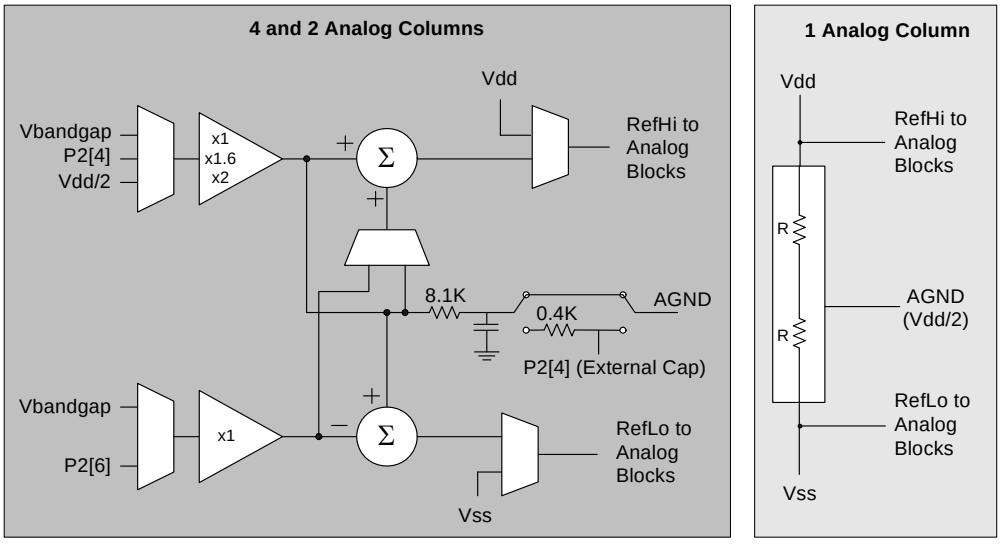

21.2 Register Definitions

The following register is associated with the Analog Reference. For a complete table of all analog registers, refer to the "Summary Table of the Analog Registers" on page 389.

The register description below has an associated register table showing the bit structure. Depending on how many analog columns your PSoC device has (see the Cols. column in the register tables below), only certain bits are accessible to be read or written. The bits that are grayed out throughout this manual are reserved bits and are not detailed in the register description that follows. Reserved bits should always be written with a value of '0'.

21.2.1 ARF_CR Register

Add.	Name	Cols.	Bit 7	Bit 6	Bit 5	Bit 4	Bit 3	Bit 2	Bit 1	Bit 0	Access
0,63h	ARF_CR	4, 2		HBE	REF[2:0]			PWR[2:0]			RW : 00

The Analog Reference Control Register (ARF_CR) is used to configure various features of the configurable analog references.

This register can only be used with four and two column PSoC devices.

Note The external bypass capacitor bit 6 (AGNDBYP) in the Bandgap Trim register (BDG_TR: 1, EAh) controls the external bypass capacitor. The default value is zero, which disables this function (see Figure 21-2). The figure shows the two switches in the AGND path in their default state. If bit 6 is set, then the P2[4] I/O should be tri-stated and an external capacitor connect from P2[4] to Vss.

Bit 6: HBE. This bit controls the ***bias*** level for all the opamps. It operates with the power setting in each block, to set the parameters of that block. Most applications will benefit from the low bias level. At high bias, the analog block opamps have a faster slew rate, but slightly less voltage swing and higher power.

Bits 5 to 3: REF[2:0]. REF (AGND, RefHI, and RefLO) sets the analog array reference control, selecting specific combinations of voltage for analog ground and references. Many of these reference voltages are based on the precision internal reference, a silicon bandgap operating at 1.30 volts. This reference has good thermal stability and power supply rejection.

Alternatively, the power supply can be scaled to provide analog ground and references; this is particularly useful for signals which are ratiometric to the power supply voltage. See Table 21-2.

User supplied external precision references can be connected to Port 2 inputs (available on 28 pin and larger parts). This is useful in setting reference for specific customer applications, such as a ±1.00 V (from AGND) ADC scale. References derived from Port 2 inputs are limited to the same output voltage range as the opamps in the analog blocks.

Note that only the 010b setting for REF[2:0] is valid in the one column PSoC device. This sets AGND = Vdd/2, RefHi = Vdd, and RefLo = Vss.

Bits 2 to 0: PWR[2:0]. PWR controls the bias current and bandwidth for all of the opamps in the analog reference block. PWR also provides on/off control in various rows of the analog array.

Table 21-1. Analog Array Power Control Bits

PWR[2:0]	CT Row	Both SC Rows	REF Bias
000b	Off	Off	Off
001b	On	Off	Low
010b	On	Off	Medium
011b	On	Off	High
100b	Off	Off	Off
101b	On	On	Low
110b	On	On	Medium
111b	On	On	High

For additional information, refer to the ARF_CR register on page 148.

Table 21-2. REF[2:0]: AGND, RefHI, and RefLO Operating Parameters for 4 and 2 Column PSoC Devices

REF [2:0]	AGND		RefHI		RefLO		Notes
	Source	Voltage	Source	Voltage	Source	Voltage	
000b	Vdd/2	2.5 V 1.65 V	Vdd/2 + Vbg	3.8 V 2.95 V	Vdd/2 – Vbg	1.2 V 0.35 V	5.0 V System 3.3 V System
001b	P2[4]	2.2 V	P2[4] + P2[6]	3.2 V	P2[4] – P2[6]	1.2 V	User Adjustable. Example: P2[4] = 2.2 V and P2[6] = 1.0 V
010b	Vdd/2	2.5 V 1.65 V	Vdd	5.0 V 3.3 V	Vss	0.0 V 0.0 V	5.0 V System 3.3 V System
011b	2 × Vbg	2.6 V	3 × Vbg	3.9 V	1 × Vbg	1.3 V	Not for 3.3 V Systems
100b	2 × Vbg	2.6 V	2 × Vbg + P2[6]	3.6 V	2 × Vbg – P2[6]	1.6 V	P2[6] < Vdd – 2.6 V. Example: P2[6] = 1.0 V
101b	P2[4]	2.2 V	P2[4] + Vbg	3.5 V	P2[4] – Vbg	0 V	User Adjustable. Example: P2[4] = 2.2 V. 1.3 < P2[4] < Vdd – 1.3
110b	Vbg	1.30 V	2 × Vbg	2.6 V	Vss	0	5.0 V System 3.3 V System
111b	1.6 × Vbg	2.08 V	3.2 × Vbg	4.16 V	Vss	0	Not for 3.3 V Systems

22. Continuous Time PSoC® Block

This chapter discusses the Analog Continuous Time PSoC® Block and its associated registers. This block supports programmable ***gain*** or ***attenuation*** opamp circuits; instrumentation amplifiers, using two CT blocks (differential gain); and modest response-time analog comparators. For a complete table of the Continuous Time PSoC Block registers, refer to the "Summary Table of the Analog Registers" on page 389. For a quick reference of all PSoC registers in address order, refer to the Register Details chapter on page 125.

22.1 Architectural Description

The Analog Continuous Time blocks are built around a rail-to-rail input and output, low offset, low ***noise*** opamp. There are several analog multiplexers (muxes) controlled by register bit settings in the control registers that determine the signal topology inside the block. There is also a precision resistor string located in the feedback path of the opamp which is controlled by register bit settings.

The block also contains a low power comparator, connected to the same inputs and outputs as the main amplifier. This comparator is useful for providing a digital compare output in low power sleep modes, when the main amplifier is powered off.

There are three discrete outputs from this block. These outputs connect to the following buses:

1. The analog output bus (ABUS), which is an analog bus resource shared by all of the analog blocks in the analog column. This signal may also be routed externally through an output buffer.
2. The comparator bus (CBUS), which is a digital bus resource shared by all of the analog blocks in the analog column.
3. The local output buses (OUT, GOUT, and LOUT), which are routed to neighboring blocks. GOUT and LOUT refer to the gain/loss mode configuration of the block and connect to GIN/LIN inputs of neighboring blocks.

Figure 22-1. Analog Continuous Time Block Diagram

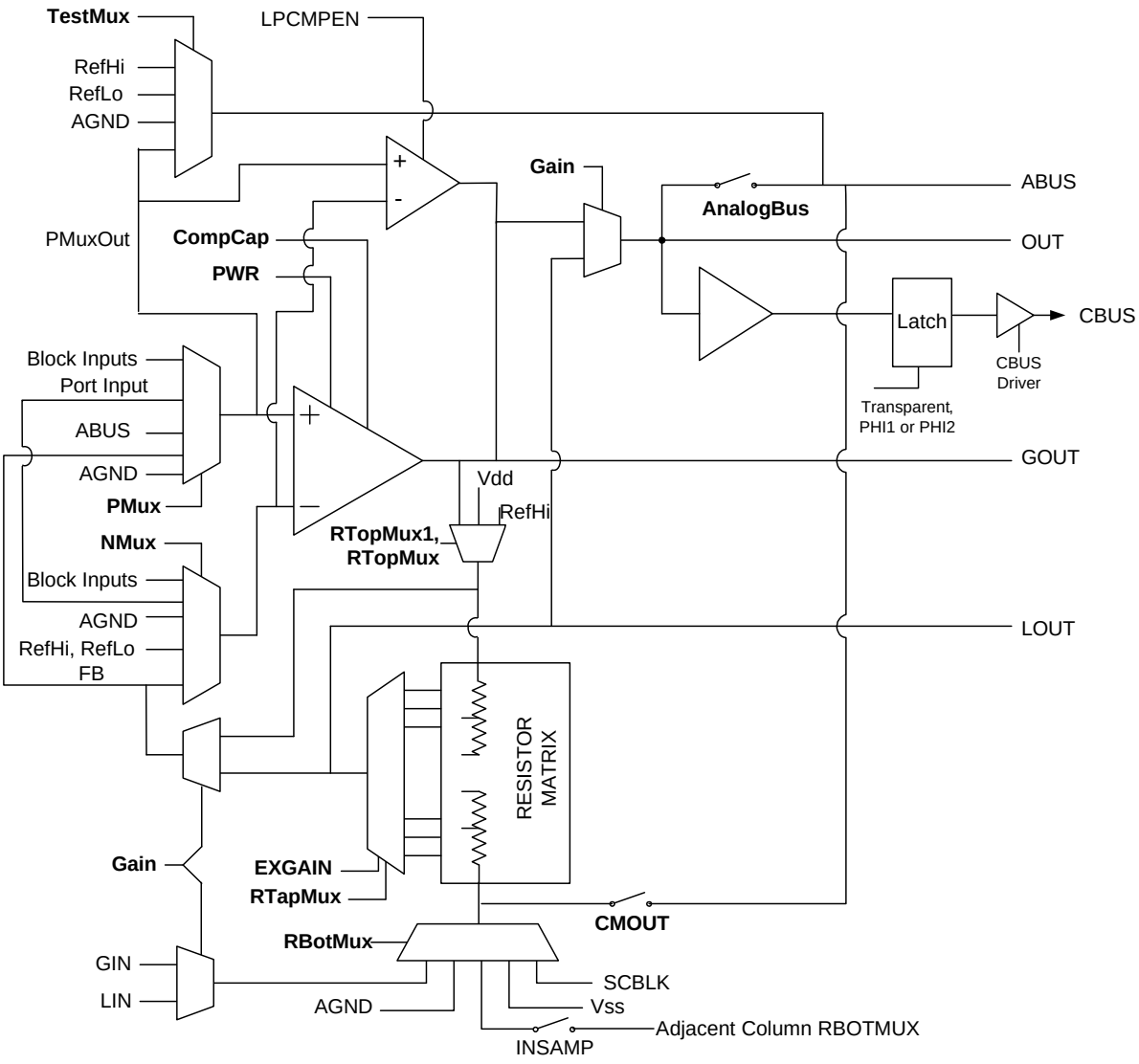

22.2 Register Definitions

The following registers are associated with the Continuous Time (CT) PSoC Block and are listed in address order. Each register description has an associated register table showing the bit structure for that register. For a complete table of the CT PSoC Block registers, refer to the “Summary Table of the Analog Registers” on page 389.

Depending on how many analog columns your PSoC device has (see the Cols. column in the register tables below), only certain bits are accessible to be read or written. The bits that are grayed out throughout this manual are reserved bits and are not detailed in the register descriptions that follow. Reserved bits should always be written with a value of ‘0’.

In the tables below, an “x” before the comma in the address field (in the “Add.” column) indicates that the register exists in both register banks. The register naming convention for arrays of PSoC blocks and their registers is <Prefix>mn<Suffix>, where m = row index and n = column index. Therefore, ACC01CR2 is a register for an analog PSoC block in row 0 column 1.

22.2.1 ACCxxCR3 Register

Add.	Name	Cols.	Bit 7	Bit 6	Bit 5	Bit 4	Bit 3	Bit 2	Bit 1	Bit 0	Access
0,70h	ACC00CR3	4, 2			AGND_PD	RTopMux1	LPCMPEN	CMOUT	INSAMP	EXGAIN	RW : 00
0,74h	ACC01CR3	4, 2			AGND_PD	RTopMux1	LPCMPEN	CMOUT	INSAMP	EXGAIN	RW : 00
0,78h	ACC02CR3	4			AGND_PD	RTopMux1	LPCMPEN	CMOUT	INSAMP	EXGAIN	RW : 00
0,7Ch	ACC03CR3	4			AGND_PD	RTopMux1	LPCMPEN	CMOUT	INSAMP	EXGAIN	RW : 00

The Analog Continuous Time Type C Block Control Register 3 (ACCxxCR3) is one of four registers used to configure a type C continuous time PSoC block.

The analog array can be used to build two different forms of instrumentation amplifiers. Two continuous time blocks combine to make the two-opamp instrumentation amplifier illustrated in Figure 22-2.

Two continuous time blocks and one switched capacitor block combine to make a three-opamp instrumentation amplifier (see Figure 22-3).

The three-opamp instrumentation amplifier handles a larger common mode input range but takes more resources. Bit 2 (CMOUT) and bit 1 (INSAMP) control switches are involved in the three-opamp instrumentation amplifier.

Depending on the address of the registers in the above table (in the “Add.” column), these registers are used for four, two, and one column PSoC devices (in the “Cols.” column). The following are descriptions of the ACCxxCR3 register bits that are not reserved.

Bit 5: AGND_PD. Used to power down AGND buffer in CT block.
0: AGND buffer power on
1: AGND buffer power off

Bit 4: RTopMux1.
0: RTop to Vdd or opamp's output depending on ACCxxCR0 bit 2.
1: RTop to RefHi.

Bit 3: LPCMPEN. Each continuous time block has a low power comparator connected in ***parallel*** with the block’s main opamp/comparator. The low power comparator is used in applications where low power is more important than low noise and low offset. The low power comparator operates when the LPCMPEN bit is set high. Because the main opamp/comparator’s output is connected to the low power comparator’s output, only one of the comparators should be active at a particular time. The main opamp/comparator is powered down by setting ACCxxCR2: PWR[1:0] to 00b, or setting ARF_CR: PWR[2:0] to x00b. The low power comparator is unaffected by the PWR bits in the ACCxxCR2 and ARF_CR registers.

Figure 22-2. Two-Opamp Instrumentation Amplifier

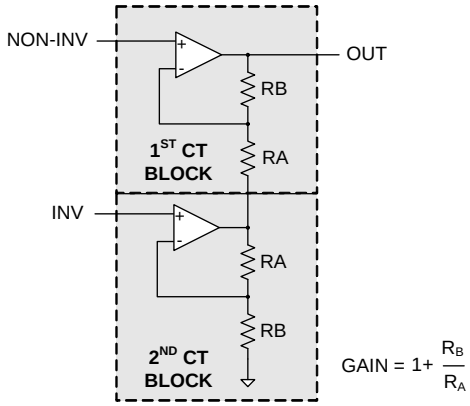

Bit 2: CMOUT. If this bit is high, then the node formed by the connection of the resistors, between the continuous time blocks, is connected to that continuous time block’s ABUS. This node is the common mode of the inputs to the instrumentation amplifier. The CMOUT bit is optional for the three-opamp instrumentation amplifier.

Bit 1: INSAMP. This bit is used to connect the resistors of two continuous time blocks as part of a three-opamp instrumentation amplifier. The INSAMP bit must be high for the three-opamp instrumentation amplifier (see Figure 22-3).

Figure 22-3. Three-Opamp Instrumentation Amplifier

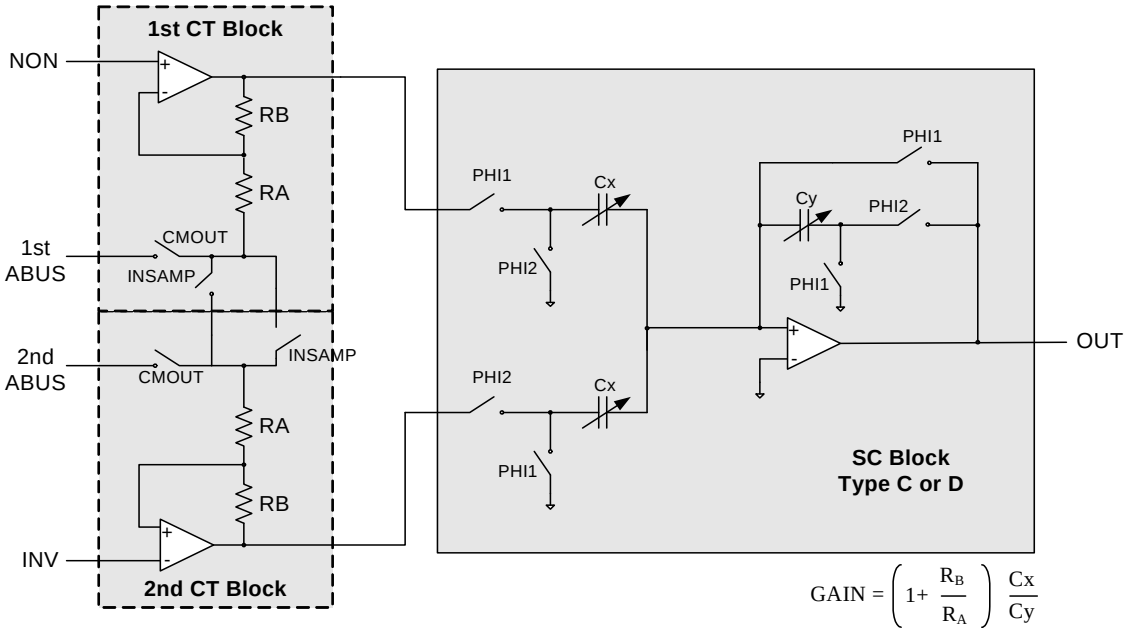

Bit 0: EXGAIN. The continuous time block's resistor tap is specified by the value of ACCxxCR3 EXGAIN, combined with the value of ACCxxCR0 RtapMux[3:0]. For RtapMux values from 0010b through 1111b, the EXGAIN bit has no effect on which tap is selected. (See the ACCxxCR0 register for details.) The EXGAIN bit enables additional resistor tap selections for RtapMux = 0001b and RtapMux = 0000b (see Figure 22-4).

For additional information, refer to the ACCxxCR3 register on page 156.

Figure 22-4. CT Block in Gain Configuration

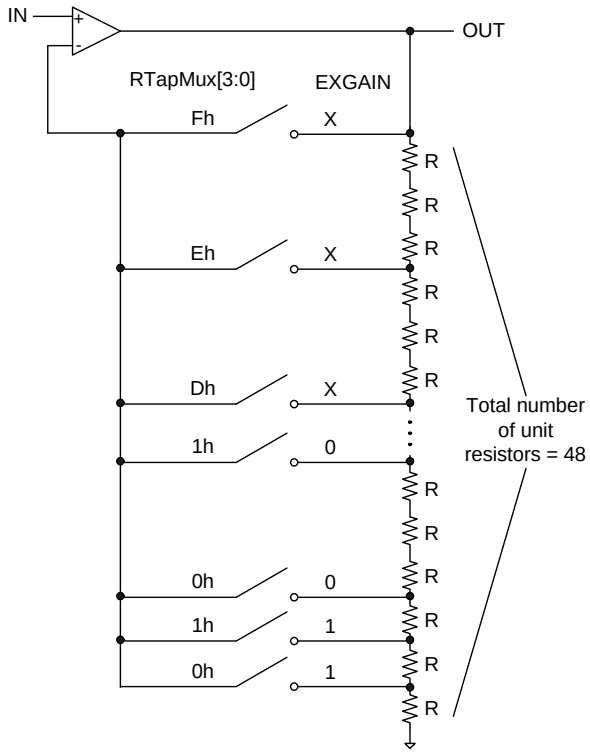

22.2.2 ACCxxCR0 Register

Add.	Name	Cols.	Bit 7	Bit 6	Bit 5	Bit 4	Bit 3	Bit 2	Bit 1	Bit 0	Access
0,71h	ACC00CR0	4, 2	RTapMux[3:0]				Gain	RTopMux	RBotMux[1:0]		RW : 00
0,75h	ACC01CR0	4, 2	RTapMux[3:0]				Gain	RTopMux	RBotMux[1:0]		RW : 00
0,79h	ACC02CR0	4	RTapMux[3:0]				Gain	RTopMux	RBotMux[1:0]		RW : 00
0,7Dh	ACC03CR0	4	RTapMux[3:0]				Gain	RTopMux	RBotMux[1:0]		RW : 00

The Analog Continuous Time Type C Block Control Register 0 (ACCxxCR0) is one of four registers used to configure a type C continuous time PSoC block.

Depending on the address of the registers in the above table (in the “Add.” column), these registers are used for four, two, and one column PSoC devices (in the “Cols.” column).

Bits 7 to 4: RTapMux[3:0]. These bits, in combination with the EXGAIN bit 0 in the ACCxxCR3 register, select the tap of the resistor string.

Bit 3: Gain. This bit controls whether the resistor string is connected around the opamp as for gain (tap to inverting opamp input) or for loss (tap to output of the block). Note that setting Gain alone does not guarantee a gain or loss block. Routing of the ends of the resistor string determine this.

Bit 2: RTopMux. This bit controls the top end of the resistor string, which can either be connected to Vdd or to the opamp output.

Bits 1 and 0: RBotMux[1:0]. These bits, in combination with the INSAMP bit 1 in the ACCxxCR3 register, control the connection of the bottom end of the resistor string.

For additional information, refer to the ACCxxCR0 register on page 157.

22.2.3 ACCxxCR1 Register

Add.	Name	Cols.	Bit 7	Bit 6	Bit 5	Bit 4	Bit 3	Bit 2	Bit 1	Bit 0	Access
0,72h	ACC00CR1	4, 2	AnalogBus	CompBus	NMux[2:0]			PMux[2:0]			RW : 00
0,76h	ACC01CR1	4, 2	AnalogBus	CompBus	NMux[2:0]			PMux[2:0]			RW : 00
0,7Ah	ACC02CR1	4	AnalogBus	CompBus	NMux[2:0]			PMux[2:0]			RW : 00
0,7Eh	ACC03CR1	4	AnalogBus	CompBus	NMux[2:0]			PMux[2:0]			RW : 00

The Analog Continuous Time Type C Block Control Register 1 (ACCxxCR1) is one of four registers used to configure a type C continuous time PSoC block.

Depending on the address of the registers in the above table (in the “Add.” column), these registers are used for four or two column PSoC devices (in the “Cols.” column).

Bit 7: AnalogBus. This bit controls the analog output bus (ABUS). A CMOS switch connects the opamp output to the analog bus.

Bit 6: CompBus. This bit controls a tri-state buffer that drives the comparator logic. If no block in the analog column is driving the comparator bus, it will be driven low externally to the blocks.

Bits 5 to 3: NMux[2:0]. These bits control the multiplexing of inputs to the inverting input of the opamp. There are seven input choices from outside the block, plus the internal feedback selection from the resistor string top.

Bits 2 to 0: PMux[2:0]. These bits control the multiplexing of inputs to the non-inverting input of the opamp. There are seven input choices from outside the block, plus the internal feedback selection from the resistor string top.

For additional information, refer to the ACCxxCR1 register on page 159.

22.2.4 ACCxxCR2 Register

Add.	Name	Cols.	Bit 7	Bit 6	Bit 5	Bit 4	Bit 3	Bit 2	Bit 1	Bit 0	Access
0,73h	ACC00CR2	4, 2	CPhase	CLatch	CompCap	TMUXEN	TestMux[1:0]		PWR[1:0]		RW : 00
0,77h	ACC01CR2	4, 2	CPhase	CLatch	CompCap	TMUXEN	TestMux[1:0]		PWR[1:0]		RW : 00
0,7Bh	ACC02CR2	4	CPhase	CLatch	CompCap	TMUXEN	TestMux[1:0]		PWR[1:0]		RW : 00
0,7Fh	ACC03CR2	4	CPhase	CLatch	CompCap	TMUXEN	TestMux[1:0]		PWR[1:0]		RW : 00

The Analog Continuous Time Type C Block Control Register 2 (ACCxxCR2) is one of four registers used to configure a type C continuous time PSoC block.

Depending on the address of the registers in the above table (in the “Add.” column), these registers are used for four or two column PSoC devices (in the “Cols.” column).

Bit 7: CPhase. This bit controls which internal clock phase the comparator data is latched on.

Bit 6: CLatch. This bit controls whether the latch is active or if it is always transparent.

Bit 5: CompCap. This bit controls whether or not the compensation capacitor is enabled in the opamp. By not switching in the compensation capacitance, a much faster response is obtained if the amplifier is used as a comparator.

Bit 4: TMUXEN. If the TMUXEN bit is high, then the value of TestMux[1:0] determines which test mux input is connected to the ABUS for that particular continuous time block. If the TMUXEN bit is low, then none of the test mux inputs are connected to the ABUS regardless of the value of TestMux[1:0].

Bits 3 and 2: TextMux[1:0]. These bits select which signal is connected to the analog bus.

Bits 1 and 0: PWR[1:0]. Power is encoded to select one of three power levels or power down (off). The blocks power up in the off state. Combined with the Turbo mode, this provides six power levels. Turbo mode is controlled by the HBE bit of the Analog Reference Control register (ARF_CR).

For additional information, refer to the ACCxxCR2 register on page 160.

23. Switched Capacitor PSoC® Block

This chapter presents the Analog Switched Capacitor Block and its associated registers. The analog Switched Capacitor (SC) blocks are built around a low offset, low noise operational amplifier. For a complete table of the Switched Capacitor PSoC® Block registers, refer to the "Summary Table of the Analog Registers" on page 389. For a quick reference of all PSoC registers in address order, refer to the Register Details chapter on page 125.

23.1 Architectural Description

The Analog Switched Capacitor blocks are built around a rail-to-rail, input and output, low offset and low noise opamp. (Refer to Figure 23-1 and Figure 23-2.) There are several analog multiplexers (muxes) controlled by register bit settings in the control registers that determine the signal topology inside the block. There are four user-selectable capacitor arrays inside this block connected to the opamp.

There are four analog arrays. Three of the four arrays are input arrays and are labeled A Cap Array, B Cap Array, and C Cap Array. The fourth array is the feedback path array and is labeled F Cap Array. All arrays have user-selectable unit values: one array is in the feedback path of the opamp and three arrays are in the input path of the opamp. Analog muxes, controlled by bit settings in control registers, set the capacitor topology inside the block. A group of muxes are used for the signal processing and switch synchronously to clocks PHI1 and PHI2, with behavior that is modified by control register settings. There is also an analog comparator that converts the opamp output (relative to the local analog ground) into a digital signal.

There are two types of Analog Switched Capacitor blocks called Type C and Type D. Their primary differences relate to connections of the C Cap Array and the block's position in a two-pole filter section. The Type D block also has greater flexibility in switching the B Cap Array.

There are three discrete outputs from this block. These outputs connect to the following buses:

1. The analog output bus (ABUS), which is an analog bus resource shared by all of the analog blocks in the analog column. This signal may also be routed externally through the output buffer. The ABUS of each column has a 1.4 pF capacitor to GND. This capacitor may be used to hold a sampled value on the ABUS net. Although there is only one capacitor per column, it is shown in both Figure 23-1 and Figure 23-2 to allow visualization of the sample and hold function. See the description of the ClockPhase bit in the ASCxxCR0 and ASDxxCR0 registers in section 23.3 Register Definitions.
2. The comparator bus (CBUS), which is a digital bus resource shared by all of the analog blocks in the analog column.
3. The local output bus (OUT), which is an analog node, is routed to neighboring block inputs.

Figure 23-1. Analog Switch Cap Type C PSoC Blocks

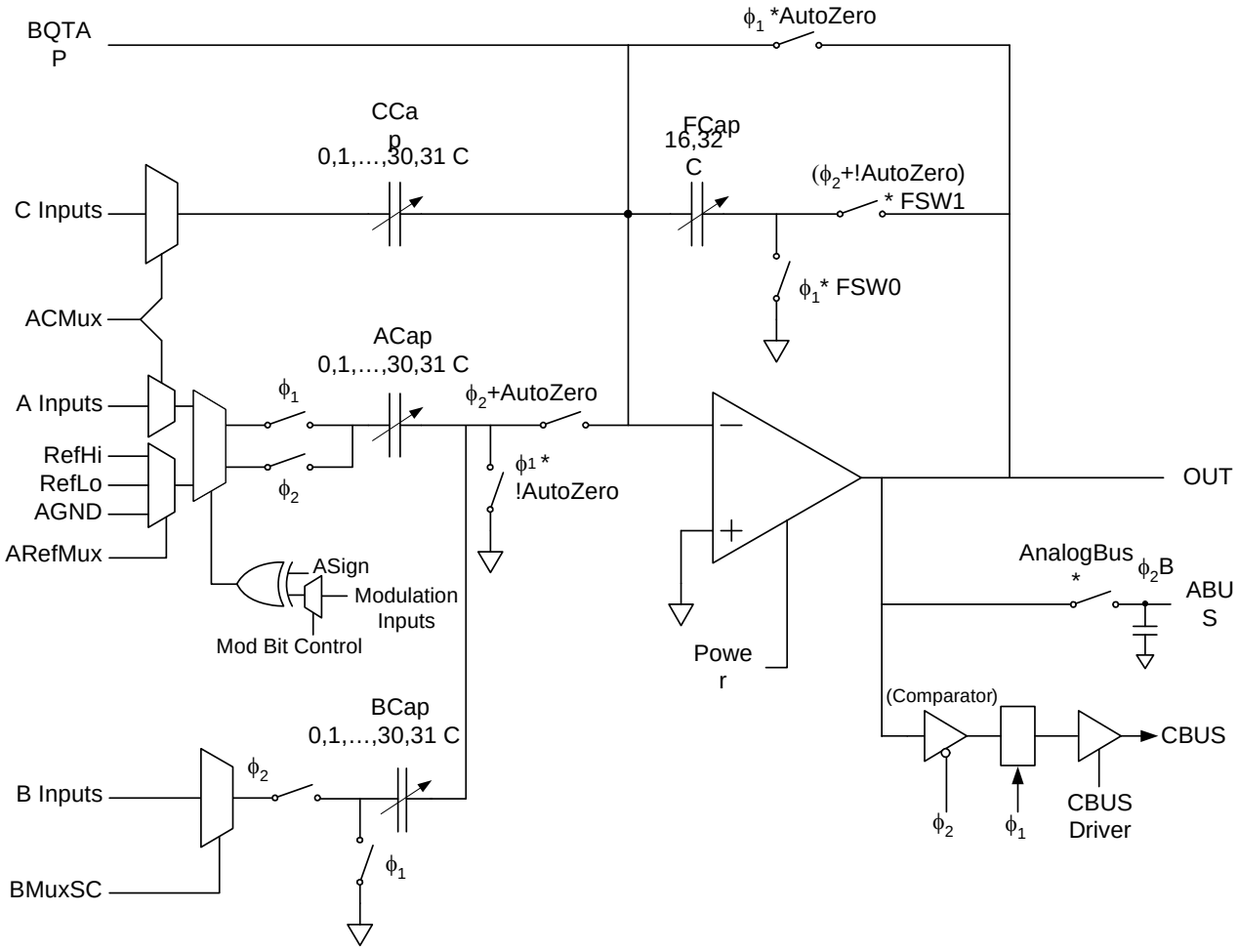

Figure 23-2. Analog Switch Cap Type D PSoC Blocks

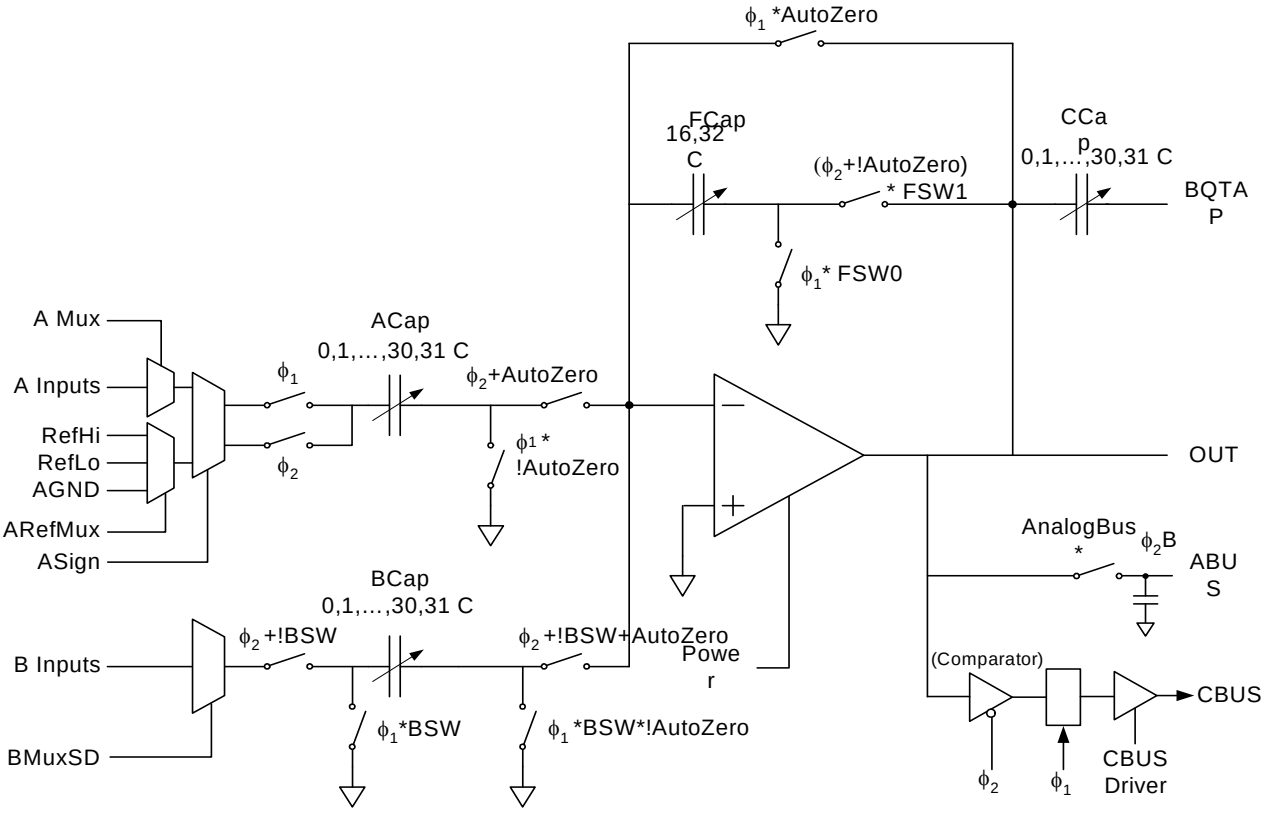

23.2 Application Description

The analog Switched Capacitor (SC) blocks support Delta-Sigma, Successive Approximation, and Incremental Analog-to-Digital Conversion, Capacitor DACs, and SC filters. They have three input arrays of binary-weighted switched capacitors, allowing user programmability of the capacitor weights. This provides summing capability of two (CDAC) scaled inputs and a non-switched capacitor input.

The non-switched capacitor node is labeled “BQTAP” in Figure 23-2. For two and four column PSoC devices, the local connection of BQTAP is between horizontal neighboring SC blocks within an analog bi-column. For one column PSoC devices, the local connection of BQTAP is vertical between the SC blocks. Because the input of SC Block C (ASCxx) has this additional switched capacitor, it is configured for the input stage of such a switched capacitor bi-quad ***filter***. When followed by an SC Block D (ASDxx) integrator, this combination of blocks can be used to provide a full universal two-pole switched capacitor bi-quad filter.

23.3 Register Definitions

The following registers are associated with the Switched Capacitor (SC) PSoC Block and are listed in address order. Each register description has an associated register table showing the bit structure for that register. For a complete table of SC PSoC Block registers, refer to the “Summary Table of the Analog Registers” on page 389.

Depending on how many analog columns your PSoC device has (see the Cols. column in the register tables below), only certain bits are accessible to be read or written. The bits that are grayed out throughout this manual are reserved bits and are not detailed in the register descriptions that follow. Reserved bits should always be written with a value of ‘0’.

Figure 23-3 applies to the ACap, BCap, and CCap functionality for the capacitor registers. The *X*Cap field is used to store the binary encoded value for capacitor *X*, where *X* can be A (ACap), B (BCap), or C (CCap), in both the ASCxxCRx and ASDxxCRx registers. Figure 23-3 illustrates the switch settings for the example ACap[4:0]=14h=10100b=20d.

Figure 23-3. Example Switch Capacitor Settings

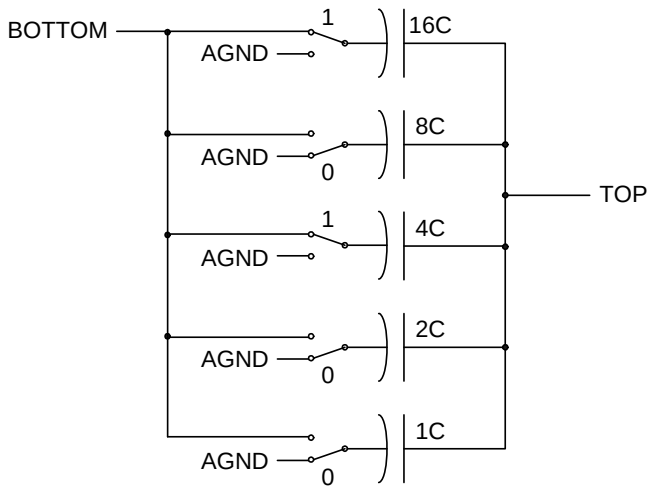

Analog Switch Cap Type C PSoC Block Control Registers

In the tables below, an “x” before the comma in the address field (in the “Add.” column) indicates that the register exists in both register banks. The register naming convention for arrays of PSoC blocks and their registers is <Prefix>mn<Suffix>, where m = row index and n = column index. Therefore, ASC21CR2 is a register for an analog PSoC block in row 2 column 1.

23.3.1 ASCxxCR0 Register

Add.	Name	Cols.	Bit 7	Bit 6	Bit 5	Bit 4	Bit 3	Bit 2	Bit 1	Bit 0	Access
0,80h	ASC10CR0	4, 2	FCap	ClockPhase	ASign	ACap[4:0]					RW : 00
0,88h	ASC12CR0	4	FCap	ClockPhase	ASign	ACap[4:0]					RW : 00
0,94h	ASC21CR0	4, 2	FCap	ClockPhase	ASign	ACap[4:0]					RW : 00
0,9Ch	ASC23CR0	4	FCap	ClockPhase	ASign	ACap[4:0]					RW : 00

The Analog Switch Cap Type C Block Control Register 0 (ASCxxCR0) is one of four registers used to configure a type C switch capacitor PSoC block.

Depending on the address of the registers in the above table (in the “Add.” column), these registers are used for four and two column PSoC devices (in the “Cols.” column).

Bit 7: FCap. This bit controls the size of the switched feedback capacitor in the integrator.

Bit 6: ClockPhase. This bit controls the internal clock phasing relative to the input clock phasing. ClockPhase affects the output of the analog column bus, which is controlled by the AnalogBus bit in the Control 2 register.

This bit is the ClockPhase select that inverts the clock internal to the blocks. During normal operation of an SC block, for the amplifier of a column enabled to drive the output bus, the connection is only made for the last half of PHI2. (During PHI1 and for the first half of PHI2, the output bus floats at the last voltage to which it was driven.) This forms a sample and hold operation, using the output bus and its associated capacitance. This design prevents the output bus from being perturbed by the intermediate states of the SC operation (often a reset state for PHI1 and settling to the valid state during PHI2). The following are the exceptions:

1. If the ClockPhase bit in CR0 (for the SC block in question) is set to ‘1’, then the output is enabled for the whole of PHI2.
2. If the SHDIS signal is set in bit 6 of the Analog Clock Source Control register, then sample and hold operation is disabled for all columns and all enabled outputs of SC blocks are connected to their respective output buses for the entire period of their respective PHI2s.

This bit also affects the latching of the comparator output (CBUS). Both clock phases, PHI1 and PHI2, are involved in the output latching mechanism. The capture of the next value to be output from the latch (capture point event) happens during the falling edge of one clock phase. The rising edge of the other clock phase will cause the value to come out (output point event). This bit determines which clock phase triggers the capture point event, and the other clock will trigger the output point event. The value output to the comparator bus will remain stable between output point events.

Bit 5: ASign. This bit controls the switch phasing of the switches on the bottom plate of the ACap capacitor. The bottom plate samples the input or the reference.

Bits 4 to 0: ACap[4:0]. The ACap bits set the value of the capacitor in the A path.

For additional information, refer to the ASCxxCR0 register on page 161.

23.3.2 ASCxxCR1 Register

Add.	Name	Cols.	Bit 7	Bit 6	Bit 5	Bit 4	Bit 3	Bit 2	Bit 1	Bit 0	Access
0,81h	ASC10CR1	4, 2	ACMux[2:0]			BCap[4:0]					RW : 00
0,89h	ASC12CR1	4	ACMux[2:0]			BCap[4:0]					RW : 00
0,95h	ASC21CR1	4, 2	ACMux[2:0]			BCap[4:0]					RW : 00
0,9Dh	ASC23CR1	4	ACMux[2:0]			BCap[4:0]					RW : 00

The Analog Switch Cap Type C Block Control Register 1 (ASCxxCR1) is one of four registers used to configure a type C switch capacitor PSoC block.

Depending on the address of the registers in the above table (in the “Add.” column), these registers are used for four and two column PSoC devices (in the “Cols.” column).

Bits 7 to 5: ACMUX[2:0]. These bits control the input muxing for both the A and C capacitor branches. The high order bit, ACMux[2], selects one of two inputs for the C branch.

Bits 4 to 0: BCap[4:0]. The BCap bits set the value of the capacitor in the B path.

For additional information, refer to the ASCxxCR1 register on page 162.

23.3.3 ASCxxCR2 Register

Add.	Name	Cols.	Bit 7	Bit 6	Bit 5	Bit 4	Bit 3	Bit 2	Bit 1	Bit 0	Access
0,82h	ASC10CR2	4, 2	AnalogBus	CompBus	AutoZero	CCap[4:0]					RW : 00
0,8Ah	ASC12CR2	4	AnalogBus	CompBus	AutoZero	CCap[4:0]					RW : 00
0,96h	ASC21CR2	4, 2	AnalogBus	CompBus	AutoZero	CCap[4:0]					RW : 00
0,9Eh	ASC23CR2	4	AnalogBus	CompBus	AutoZero	CCap[4:0]					RW : 00

The Analog Switch Cap Type C Block Control Register 2 (ASCxxCR2) is one of four registers used to configure a type C switch capacitor PSoC block.

Depending on the address of the registers in the above table (in the “Add.” column), these registers are used for four and two column PSoC devices (in the “Cols.” column).

Bit 7: AnalogBus. This bit gates the output to the analog column bus (ABUS). The output on the ABUS is affected by the state of the ClockPhase bit in the Control 0 register. If AnalogBus is set to ‘0’, the output to the analog column bus is tri-stated. If AnalogBus is set to ‘1’, the signal that is output to the analog column bus is selected by the ClockPhase bit. If the ClockPhase bit is ‘0’, the block output is gated by sampling clock on the last part of PHI2. If the ClockPhase bit is ‘1’, the block output continuously drives the ABUS.

Bit 6: CompBus. This bit controls the output to the column comparator bus (CBUS). Note that if the CBUS is not driven by anything in the column, it is pulled low. The comparator output is evaluated on the rising edge of internal PHI1 and is latched so it is available during internal PHI2.

Bit 5: AutoZero. This bit controls the shorting of the output to the inverting input of the opamp. When shorted, the opamp is basically a follower. The output is the opamp offset. By using the feedback capacitor of the integrator, the block can memorize the offset and create an offset cancellation scheme. AutoZero also controls a pair of switches between the A and B branches and the summing node of the opamp. If AutoZero is enabled, then the pair of switches is active. AutoZero also affects the function of the FSW1 bit in the Control 3 register.

Bits 4 to 0: CCap[4:0]. The CCap bits set the value of the capacitor in the C path.

For additional information, refer to the ASCxxCR2 register on page 163.

23.3.4 ASCxxCR3 Register

Add.	Name	Cols.	Bit 7	Bit 6	Bit 5	Bit 4	Bit 3	Bit 2	Bit 1	Bit 0	Access
0,83h	ASC10CR3	4, 2	ARefMux[1:0]		FSW1	FSW0	BMuxSC[1:0]		PWR[1:0]		RW : 00
0,8Bh	ASC12CR3	4	ARefMux[1:0]		FSW1	FSW0	BMuxSC[1:0]		PWR[1:0]		RW : 00
0,97h	ASC21CR3	4, 2	ARefMux[1:0]		FSW1	FSW0	BMuxSC[1:0]		PWR[1:0]		RW : 00
0,9Fh	ASC23CR3	4	ARefMux[1:0]		FSW1	FSW0	BMuxSC[1:0]		PWR[1:0]		RW : 00

The Analog Switch Cap Type C Block Control Register 3 (ASCxxCR3) is one of four registers used to configure a type C switch capacitor PSoC block.

Depending on the address of the registers in the above table (in the “Add.” column), these registers are used for four and two column PSoC devices (in the “Cols.” column).

Bits 7 and 6: ARefMux[1:0]. These bits select the reference input of the A capacitor branch.

Bit 5: FSW1. This bit is used to control a switch in the integrator capacitor path. It connects the output of the opamp to the integrating cap. The state of the feedback switch is affected by the state of the AutoZero bit in the Control 2 register. If the FSW1 bit is set to ‘0’, the switch is always disabled. If the FSW1 bit is set to ‘1’, the AutoZero bit determines the state of the switch. If the AutoZero bit is ‘0’, the switch is enabled at all times. If the AutoZero bit is ‘1’, the switch is enabled only when the internal PHI2 is high.

Bit 4: FSW0. This bit is used to control a switch in the integrator capacitor path. It connects the output of the opamp to analog ground.

Bits 3 and 2: BMuxSC[1:0]. These bits control the muxing to the input of the B capacitor branch.

Bits 1 and 0: PWR[1:0]: The power bits serve as encoding for selecting one of four power levels. The block always powers up in the off state.

For additional information, refer to the ASCxxCR3 register on page 164.

Analog Switch Cap Type D PSoC Block Control Registers

In the tables below, an “x” before the comma in the address field (in the “Add.” column) indicates that the register exists in both register banks. The register naming convention for arrays of PSoC blocks and their registers is <Prefix>mn<Suffix>, where m = row index and n = column index. Therefore, ASD01CR0 is a register for an analog PSoC block in row 0 column 1.

23.3.5 ASDxxCR0 Register

Add.	Name	Cols.	Bit 7	Bit 6	Bit 5	Bit 4	Bit 3	Bit 2	Bit 1	Bit 0	Access
0,84h	ASD11CR0	4, 2	FCap	ClockPhase	ASign	ACap[4:0]					RW : 00
0,8Ch	ASD13CR0	4	FCap	ClockPhase	ASign	ACap[4:0]					RW : 00
0,90h	ASD20CR0	4, 2	FCap	ClockPhase	ASign	ACap[4:0]					RW : 00
0,98h	ASD22CR0	4	FCap	ClockPhase	ASign	ACap[4:0]					RW : 00

The Analog Switch Cap Type D Block Control Register 0 (ASDxxCR0) is one of four registers used to configure a type D switch capacitor PSoC block.

Depending on the address of the registers in the above table (in the “Add.” column), these registers are used for four and two column PSoC devices (in the “Cols.” column).

Bit 7: FCap. This bit controls the size of the switched feedback capacitor in the integrator.

Bit 6: ClockPhase. This bit controls the internal clock phasing relative to the input clock phasing. ClockPhase affects the output of the analog column bus which is controlled by the AnalogBus bit in the Control 2 register.

This bit is the ClockPhase select that inverts the clock internal to the blocks. During normal operation, of an SC block for the amplifier of a column enabled to drive the output bus, the connection is only made for the last half of PHI2. (During PHI1 and for the first half of PHI2, the output bus floats at the last voltage to which it was driven.) This forms a sample and hold operation using the output bus and its associated capacitance. This design prevents the output bus from being perturbed by the intermediate states of the SC operation (often a reset state for PHI1 and settling to the valid state during PHI2). The following are the exceptions:

1. If the ClockPhase bit in CR0 (for the SC block in question) is set to ‘1’, then the output is enabled for the whole of PHI2.
2. If the SHDIS signal is set in bit 6 of the Analog Clock Select register, then sample and hold operation is disabled for all columns and all enabled outputs of SC blocks are connected to their respective output buses, for the entire period of their respective PHI2s.

This bit also affects the latching of the comparator output (CBUS). Both clock phases, PHI1 and PHI2, are involved in the output latching mechanism. The capture of the next value to be output from the latch (capture point event) happens during the falling edge of one clock phase. The rising edge of the other clock phase will cause the value to come out (output point event). This bit determines which clock phase triggers the capture point event, and the other clock will trigger the output point event. The value output to the comparator bus will remain stable between output point events.

Bit 5: ASign. This bit controls the switch phasing of the switches on the bottom plate of the A capacitor. The bottom plate samples the input or the reference.

Bits 4 to 0: ACap[4:0]. The ACap bits set the value of the capacitor in the A path.

For additional information, refer to the ASDxxCR0 register on page 165.

23.3.6 ASDxxCR1 Register

Add.	Name	Cols.	Bit 7	Bit 6	Bit 5	Bit 4	Bit 3	Bit 2	Bit 1	Bit 0	Access
0,85h	ASD11CR1	4, 2	AMux[2:0]			BCap[4:0]					RW : 00
0,8Dh	ASD13CR1	4	AMux[2:0]			BCap[4:0]					RW : 00
0,91h	ASD20CR1	4, 2	AMux[2:0]			BCap[4:0]					RW : 00
0,99h	ASD22CR1	4	AMux[2:0]			BCap[4:0]					RW : 00

The Analog Switch Cap Type D Block Control Register 1 (ASDxxCR1) is one of four registers used to configure a type D switch capacitor PSoC block.

Depending on the address of the registers in the above table (in the “Add.” column), these registers are used for four and two column PSoC devices (in the “Cols.” column).

Bits 7 to 5: AMux[2:0]. These bits control the input muxing for the A capacitor branch.

Bits 4 to 0: BCap[4:0]. The BCap bits set the value of the capacitor in the B path.

For additional information, refer to the ASDxxCR1 register on page 166.

23.3.7 ASDxxCR2 Register

Add.	Name	Cols.	Bit 7	Bit 6	Bit 5	Bit 4	Bit 3	Bit 2	Bit 1	Bit 0	Access
0,86h	ASD11CR2	4, 2	AnalogBus	CompBus	AutoZero	CCap[4:0]					RW : 00
0,8Eh	ASD13CR2	4	AnalogBus	CompBus	AutoZero	CCap[4:0]					RW : 00
0,92h	ASD20CR2	4, 2	AnalogBus	CompBus	AutoZero	CCap[4:0]					RW : 00
0,9Ah	ASD22CR2	4	AnalogBus	CompBus	AutoZero	CCap[4:0]					RW : 00

The Analog Switch Cap Type D Block Control Register 2 (ASDxxCR2) is one of four registers used to configure a type D switch capacitor PSoC block.

Depending on the address of the registers in the above table (in the “Add.” column), these registers are used for four and two column PSoC devices (in the “Cols.” column).

Bit 7: AnalogBus. This bit gates the output to the analog column bus (ABUS). The output on the ABUS is affected by the state of the ClockPhase bit in the Control 0 Register. If AnalogBus is set to ‘0’, the output to the ABUS is tri-stated. If AnalogBus is set to ‘1’, the ClockPhase bit selects the signal that is output to the analog-column bus. If the ClockPhase bit is ‘0’, the block output is gated by sampling clock on the last part of PHI2. If the ClockPhase bit is ‘1’, the block ClockPhase continuously drives the ABUS.

Bit 6: CompBus. This bit controls the output to the column comparator bus (CBUS). Note that if the CBUS is not driven by anything in the column, it is pulled low. The comparator output is evaluated on the rising edge of internal PHI1 and is latched so it is available during internal PHI2.

Bit 5: AutoZero. This bit controls the shorting of the output to the inverting input of the opamp. When shorted, the opamp is basically a follower. The output is the opamp offset. By using the feedback capacitor of the integrator, the block can memorize the offset and create an offset cancellation scheme. AutoZero also controls a pair of switches between the A and B branches and the summing node of the opamp. If AutoZero is enabled, then the pair of switches is active. AutoZero also affects the function of the FSW1 bit in the Control 3 register.

Bits 4 to 0: CCap[4:0]. The CCap bits set the value of the capacitor in the C path.

For additional information, refer to the ASDxxCR2 register on page 167.

23.3.8 ASDxxCR3 Register

Add.	Name	Cols.	Bit 7	Bit 6	Bit 5	Bit 4	Bit 3	Bit 2	Bit 1	Bit 0	Access
0,87h	ASD11CR3	4, 2	ARefMux[1:0]		FSW1	FSW0	BSW	BMuxSD	PWR[1:0]		RW : 00
0,8Fh	ASD13CR3	4	ARefMux[1:0]		FSW1	FSW0	BSW	BMuxSD	PWR[1:0]		RW : 00
0,93h	ASD20CR3	4, 2	ARefMux[1:0]		FSW1	FSW0	BSW	BMuxSD	PWR[1:0]		RW : 00
0,9Bh	ASD22CR3	4	ARefMux[1:0]		FSW1	FSW0	BSW	BMuxSD	PWR[1:0]		RW : 00

The Analog Switch Cap Type D Block Control Register 3 (ASDxxCR3) is one of four registers used to configure a type D switch capacitor PSoC block.

Depending on the address of the registers in the above table (in the “Add.” column), these registers are used for four and two column PSoC devices (in the “Cols.” column).

Bits 7 and 6: ARefMux[1:0]. These bits select the reference input of the A capacitor branch.

Bit 5: FSW1. This bit is used to control a switch in the integrator capacitor path. It connects the output of the opamp to the integrating cap. The state of the switch is affected by the state of the AutoZero bit in the Control 2 register. If the FSW1 bit is set to ‘0’, the switch is always disabled. If the FSW1 bit is set to ‘1’, the AutoZero bit determines the state of the switch. If the AutoZero bit is ‘0’, the switch is enabled at all times. If the AutoZero bit is ‘1’, the switch is enabled only when the internal PHI2 is high.

Bit 4: FSW0. This bit is used to control a switch in the integrator capacitor path. It connects the output of the opamp to analog ground.

Bit 3: BSW. This bit is used to control switching in the B branch. If disabled, the B capacitor branch is a continuous time branch such as the C branch of the SC A Block. If enabled, then on internal PHI1, both ends of the cap are switched to analog ground. On internal PHI2, one end is switched to the B input and the other end is switched to the summing node.

Bit 2: BMuxSD. This bit controls muxing to the input of the B capacitor branch. The B branch can be switched or unswitched.

Bits 1 and 0: PWR[1:0]. The power bits serve as encoding for selecting one of four power levels. The block always powers up in the off state.

For additional information, refer to the ASDxxCR3 register on page 168.

24. Two Column Limited Analog System

This chapter explains the Two Column Limited Analog System PSoC® devices and their associated registers. It details the entire analog system for two column limited functionality, including the analog interface, analog array, analog input configuration, analog reference, CT and SC blocks. For a complete table of the Two Column Limited Analog System registers, refer to the "Summary Table for Two Column Limited Analog System Registers" on page 452. For a quick reference of all PSoC registers in address order, refer to the Register Details chapter on page 125.

Unique to the CY8C28xxx PSoC devices is the use of an I/O analog multiplexer system resource. The I/O Analog Multiplexer is described in the I/O Analog Multiplexer chapter on page 525. A summary of the I/O Analog Multiplexer registers are located in the section called "System Resources" on page 461.

24.1 Architectural Description

24.1.1 Analog Interface

Figure 24-1 displays the top-level diagram of the PSoC devices' analog interface system.

Figure 24-1. Analog Comparator Bus Slice of the CY8C28xxx PSoC Devices

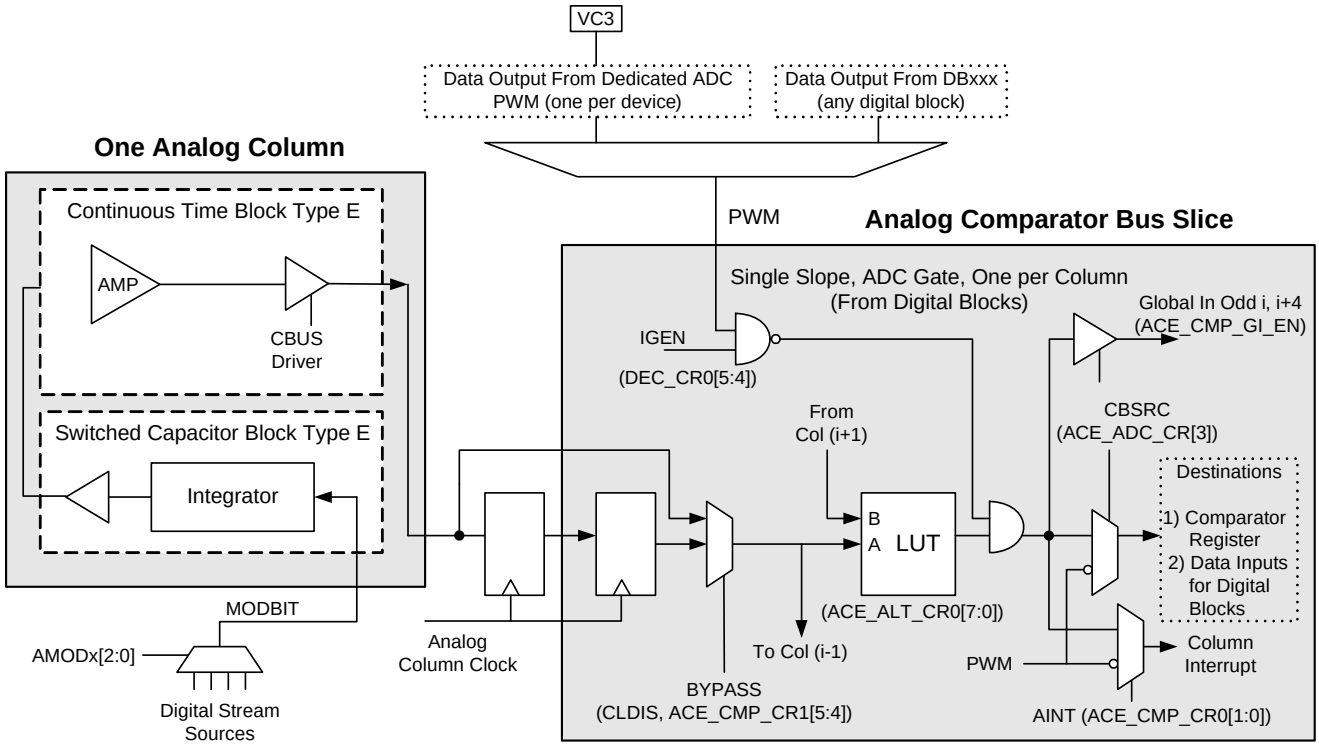

24.1.1.1 Analog Comparator Bus Interface

Each analog column has a dedicated comparator bus associated with it. In the CY8C28xxx, PSoC devices, only the Continuous Time (CT) block can drive this bus. The output on the comparator bus cannot drive into the digital blocks as a data input. It can serve as an input to Switched Capacitor (SC) blocks as an interrupt input, and is available as read only data in the Analog Comparator Control register (ACE_CMP_CR0). It can be driven to the global output bus by way of the Comparator to Global Input Enable register (ACE_CMP_GI_EN).

Figure 24-1 illustrates one column of the comparator bus. The comparator bus is synchronized by the selected column clock before it is available, to either drive the digital blocks, interrupt, SC blocks, or for it to be read in the ACE_CMP_CR0 register. There is also an option to bypass the synchronization in each column into a transparent mode by setting bits in the ACE_CMP_CR1 register.

As shown in Figure 24-1, the comparator bus output is gated by the primary output of a selected digital block. This feature is used to precisely control the conversion period of a single slope ADC. Any digital block can be used to drive the gate signal. This selection may be made with the ICLKS bits in registers DEC_CR0 and DEC_CR1. This function may be enabled on a column-by-column basis, by setting the ACE_IGEN bits in the DEC_CR0 register. Alternately, the dedicated ADC PWM, with VC3 as input, can be used to gate the ADC conversion period without the need for a digital block. When this dedicated PWM is configured, it overrides the ICLKS selection as defined by the DEC_CR0 and DEC_CR1 registers.

The analog comparator bus output values can be modified or combined with another analog comparator bus through the Analog Look-Up-Table (LUT) function. The LUT takes two inputs, A and B, and provides a selection of 16 possible logic functions for those inputs. The LUT A and B inputs for each column comparator output is shown in the following table.

Table 24-1. A and B Inputs for Each Column Comparator LUT Output for the CY8C28xxx Devices

Comparator LUT Output	A	B
Column 4	ACMP4	ACMP5
Column 5	ACMP5	0

The LUT configuration is set in two control registers, ACE_ALT_CR0 and ACE_ALT_CR1. Each selection for each column is encoded in four bits. The function value corresponding to the bit encoding is shown in Table 24-2.

Table 24-2. RDIxLTx Register

LUTx[3:0]	0h: 0000: FALSE 1h: 0001: A .AND. $\overline{B}$ 2h: 0010: A .AND. $\overline{B}$ 3h: 0011: $\overline{A}$ 4h: 0100: $\overline{A}$ .AND. B 5h: 0101: B 6h: 0110: A .XOR. B 7h: 0111: A .OR. B 8h: 1000: A .NOR. B 9h: 1001: $\overline{A}$ .XNOR. B Ah: 1010: $\overline{B}$ Bh: 1011: $\overline{A}$ .OR. $\overline{B}$ Ch: 1100: $\overline{A}$ Dh: 1101: $\overline{A}$ .OR. B Eh: 1110: A. NAND. B Fh: 1111: TRUE

24.1.1.2 Analog Column Clock Generation

The input clock source for each column clock generator is selectable according to the ACE_CLK_CR0 register. There are four selections for each column: VC1, VC2, ACLK4, and ACLK5. An additional selection, SYSCLK, is controlled by the ACE_CLK_CR3 register. The VC1 and VC2 clock signals are global system clocks. Programming options for these system clocks can be accessed in the OSC_CR1 register. Each of the ACLK4 and ACLK5 clock selections are driven by a selection of digital block outputs. The settings for the digital block selection are located in the ACE_CLK_CR1 register. The ACE_CLK_CR3 register has additional column clock options. This register allows for a direct SYSCLK option as well as the option to divide the selected column clock by 2, 4, or 8.

24.1.1.3 Single Slope ADC

A simplified block diagram of the single slope ADC (SSADC) implementation is show in Figure 24-2. The core of the conversion algorithm involves a current source, an integrating capacitor, and a comparator. When the current source is activated, a linear voltage ramp is generated on the capacitor. This voltage is an input to an analog comparator circuit; the other input of which is the analog input voltage to be converted. With the polarity of hookup as shown, the comparator will be high until the ramp voltage equals the input voltage, at which time it will transition low. A counter gate is generated by the AND of the PWM high time (which defines the start of the ramp) and the comparator (which defines the trip point or the end of the conversion for a given voltage). When the conversion is complete, the code may be read from the counter. Each column has an ADC configuration register (ACE_ADCx_CR).

Figure 24-2. Single Slope ADC Block Diagram

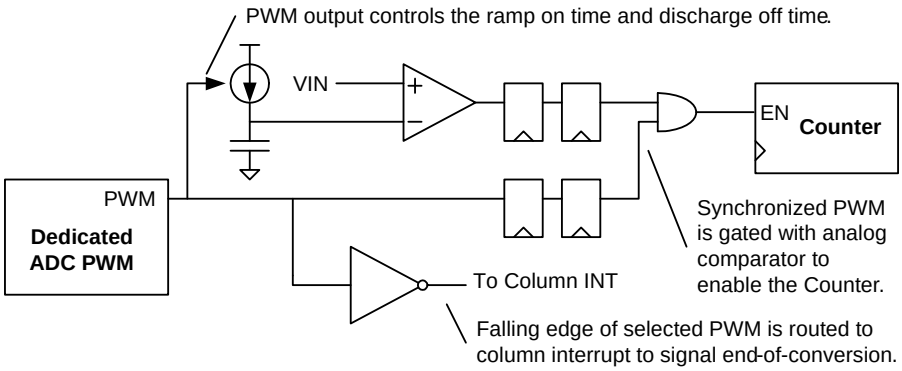

To interface the asynchronous analog comparator to the digital block array, a double synchronization is required. As shown in Figure 24-2, the PWM is also delayed to align with the valid comparator output.

The basic conversion waveforms are shown in Figure 24-3. The high time of the PWM is set so that the counter will count to a full-scale value. For example, for 8-bit resolution, the high time of the PWM corresponds to 255 (or 256) counter clocks. The low time of the PWM is designed to allow the capacitor to discharge. When a PWM is used for continuous conversions, the Terminal Count of the PWM can be used as a consistent interrupt to read the result of the previous conversion. If only a single conversion is desired, the comparator trip point can be used as an interrupt to signal the end of conversion.

A trim register (ADCx_TR) is provided for each column. The converter must be calibrated for a given maximum voltage, resolution, and frequency of operation before use.

Figure 24-3. Basic ADC Waveforms

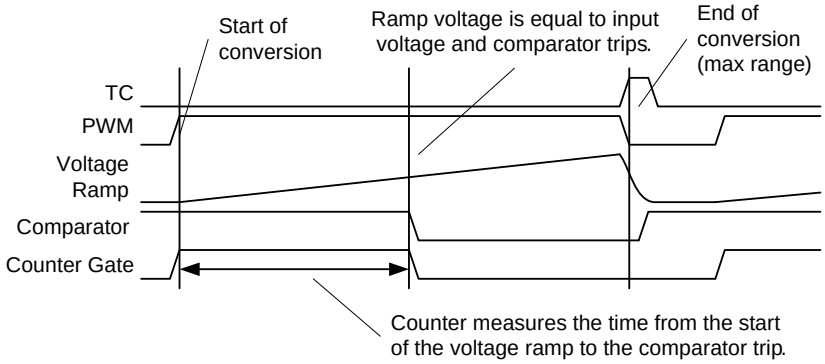

24.1.1.4 PWM ADC Interface

The analog interface provides hardware support and signal routing for ***analog-to-digital (ADC)*** conversion functions, specifically the single slope ADC. The control signals for this interface are split between three registers: DEC_CR0, DEC_CR1, and ACE_PWM_CR.

The analog interface has support for the single slope ADC operation through the ability to gate the analog comparator outputs. This gating function is required to precisely control the digital integration period that is performed in a digital block as part of the function. A digital block PWM or the dedicated ADC PWM may be used as a source to provide the gate signal. Only one source for the gating signal can be selected. However, the gating can be applied independently to any of the column comparator outputs.

The CY8C28xxx devices contain a dedicated block that can perform this PWM gating function using VC3. The VC3 signal, out of the VC3 divider block, can be further divided to provide for gating the incremental ADC.

The ACE_PWM_CR register controls the duty cycle selection in terms of VC3 periods, as shown in the following tables. When enabled, the PWM block becomes the source for the incremental gating, overriding the digital block selection.

Table 24-3. PWM High Time

HI[2:0]	Description
000b	Block is not selected, input to incremental gate is from selected digital block.
001b	High time is 1 VC3 period.
010b	High time is 2 VC3 period.
011b	High time is 4 VC3 period.
100b	High time is 8 VC3 period.
101b	High time is 16 VC3 period.

Table 24-4. PWM Low Time

LO[1:0]	Description
00b	No low time. Comparator gate is continually high.
01b	Low time is one VC3 period.
10b	Low time is two VC3 period.
11b	Low time is three VC3 period.

As an alternative to the PWM, the ICLKS bits, which are split between the DEC_CR0 and DEC_CR1 registers, may be used to select a digital block source for the incremental gating signal. Regardless of the source of the gating, the two IGEN bits are used to independently enable the gating function on a column-by-column basis.

24.1.1.5 Analog Modulator Interface (Mod Bits)

The Analog Modulator Interface provides a selection of signals that are routed to either of the two analog array modulation control signals. There is one modulation control signal for the CY8C28xxx Switched Capacitor block. There are nine selections, which include the dedicated reference voltage generator PWM output, the analog comparator bus outputs (include CS comparator output), two global outputs, and a digital block broadcast bus. The selections for all columns are contained in the ACE_AMD_CR0 and ACE_AMD_CR1 registers.

One use of the modulator interface is to provide a selectable reference to one of the comparator inputs. This can be done by configuring a digital block as a PWM or PRS output with the desired duty cycle. The SC block will then give a low-pass filtered version of this signal, which will be a DC voltage relative to the supply with some ripple.

24.1.1.6 Sample and Hold Feature

Sample and Hold capability can be selected for improved analog-to-digital conversion accuracy. This is done by setting the SHEN bit in the ADCx_CR register.

When enabled, this feature works in conjunction with the selected SSADC PWM input. During the PWM high time, the conversion is active and the sample and hold is in “hold” mode. During the PWM low time, the conversion is inactive, and the sample and hold circuit is in “sample” mode.

24.1.2 Analog Array

The analog array is designed to allow moving between families without modifying projects, except for resource limitations. The CY8C28x13 PSoC devices have limited analog array functionality. The only analog array connections available to the limited analog array in the CY8C28x13 are the NMux and PMux connections. Figure 24-4 displays the limited analog arrays for the CY8C28x13 devices, containing the type E continuous time blocks (ACE) and the type E switched capacitor blocks (ASE). Each analog column has 2 analog blocks associated with it. The figures that follow illustrate the analog multiplexer (mux) connections.

Each analog column has a dedicated comparator bus associated with it. Only the CT block in each column can drive this bus. When the CT block is not configured as a comparator, a zero is driven to the comparator block. Refer to the ACCxxCR1 register on page 159 and the "Analog Comparator Bus Interface" on page 442 in the Analog Interface section for more information.

Figure 24-4. Array of Limited Analog PSoC Block

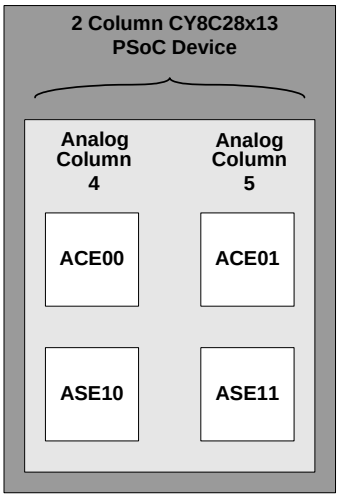

24.1.2.1 NMux Connections

The NMux is an 8-to-1 mux which determines the source for the inverting (also called negative) input of Continuous Time (CT) PSoC blocks. These blocks are named ACE00 and ACE01. More details on the CT PSoC blocks are available in this chapter, in the section titled "Continuous Time PSoC Block" on page 450. The NMux connections are described in detail in the ACExxCR1 register on page 125, bits NMux[2:0]. The numbers in Figure 24-5, which are associated with each arrow, are the corresponding NMux select line values for the data in the NMux portion of the register. The call out names in the figure show nets selected for each NMux value.

Figure 24-5. NMux Connections

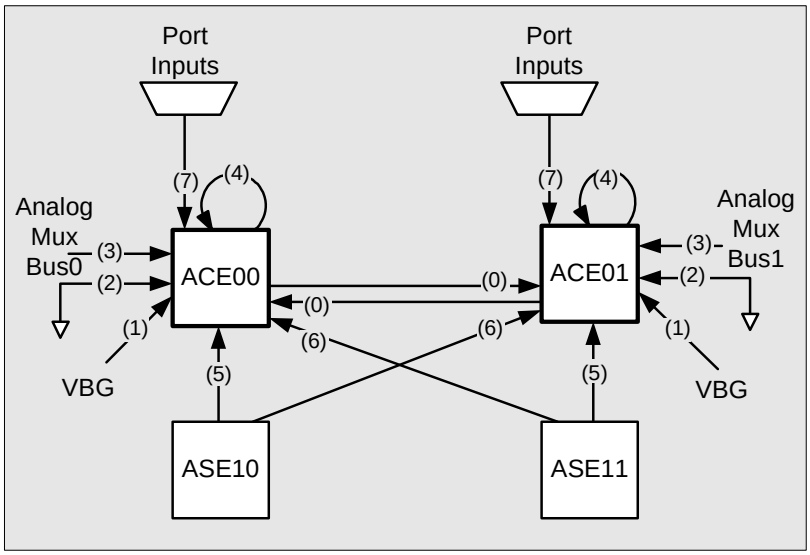

24.1.2.2 PMux Connections

The PMux is an 8-to-1 mux which determines the source for the non-inverting (also called positive) input of CT PSoC blocks (ACE00 and ACE01). More details on the CT PSoC blocks are available in this chapter, in the section titled "Continuous Time PSoC Block" on page 450. The PMux connections are described in detail in the ACExxCR1 register on page 125, bits PMux[2:0]. The numbers in Figure 24-6, which are associated with each arrow, are the corresponding PMux select line values for the data in the PMux portion of the register. The call out names in the figure show nets selected for each PMux value.

Figure 24-6. PMux Connections

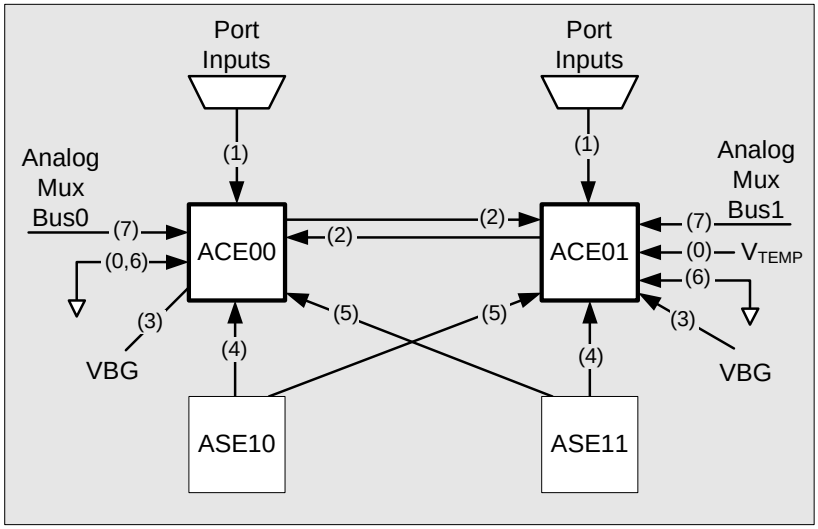

24.1.2.3 Temperature Sensing Capability

A temperature-sensitive voltage, derived from the bandgap sensing on the die, is buffered and available as an analog input into the continuous time block ACE01. Temperature sensing allows protection of device operating ranges for fail-safe applications. Temperature sensing, combined with a long sleep timer interval (to allow the die to approximate ***ambient temperature***), can give an approximate ambient temperature for data acquisition and battery charging applications. The user may also calibrate the internal temperature rise based on a known current consumption.

The temperature sensor input to the ACE01 block is labeled V_{TEMP}.

24.1.3 Analog Input Configuration

Figure 24-8 and Figure 24-9 show the analog input configuration for the CY8C28xxx PSoC devices. For a detailed description of the I/O analog multiplexer functionality illustrated in Figure 24-8, refer to the I/O Analog Multiplexer chapter on page 525.

The input multiplexer (mux) maps device inputs (package pins) to analog array columns, based on bit values in the ACE_AMX_IN and ACE_ABF_CR0 registers. Column 4 is fed by one 4-to-1 mux; column 5 is fed by one of two 4-to-1 muxes. The muxes are CMOS switches with typical resistances in the range of 2 kΩ.

Figure 24-7. Limited Two Column Analog Interconnect

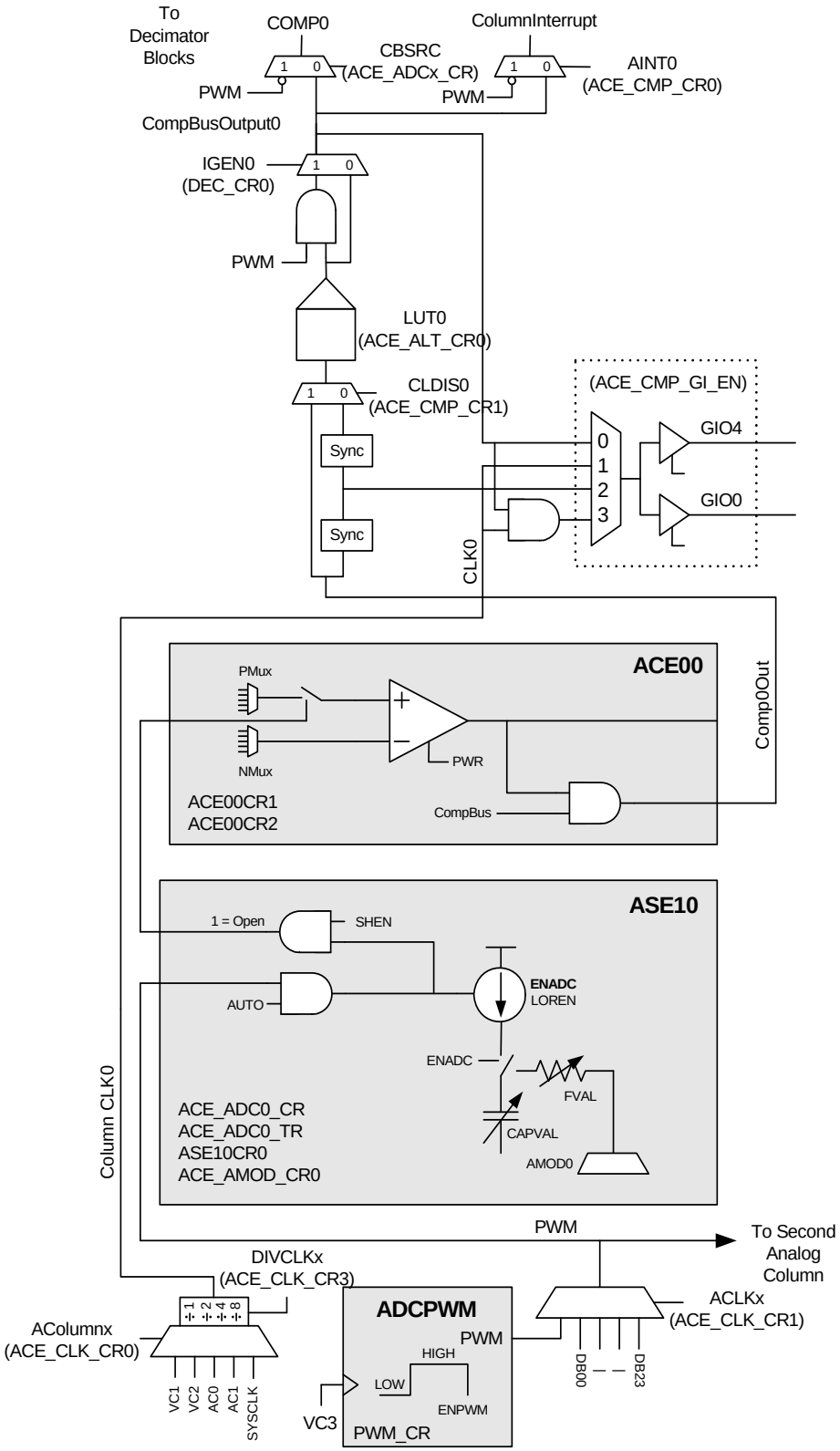

Figure 24-8. Two Column Limited Analog Pin Block Diagram for the CY8C28xxx (28-Pin and 44-Pin Part)

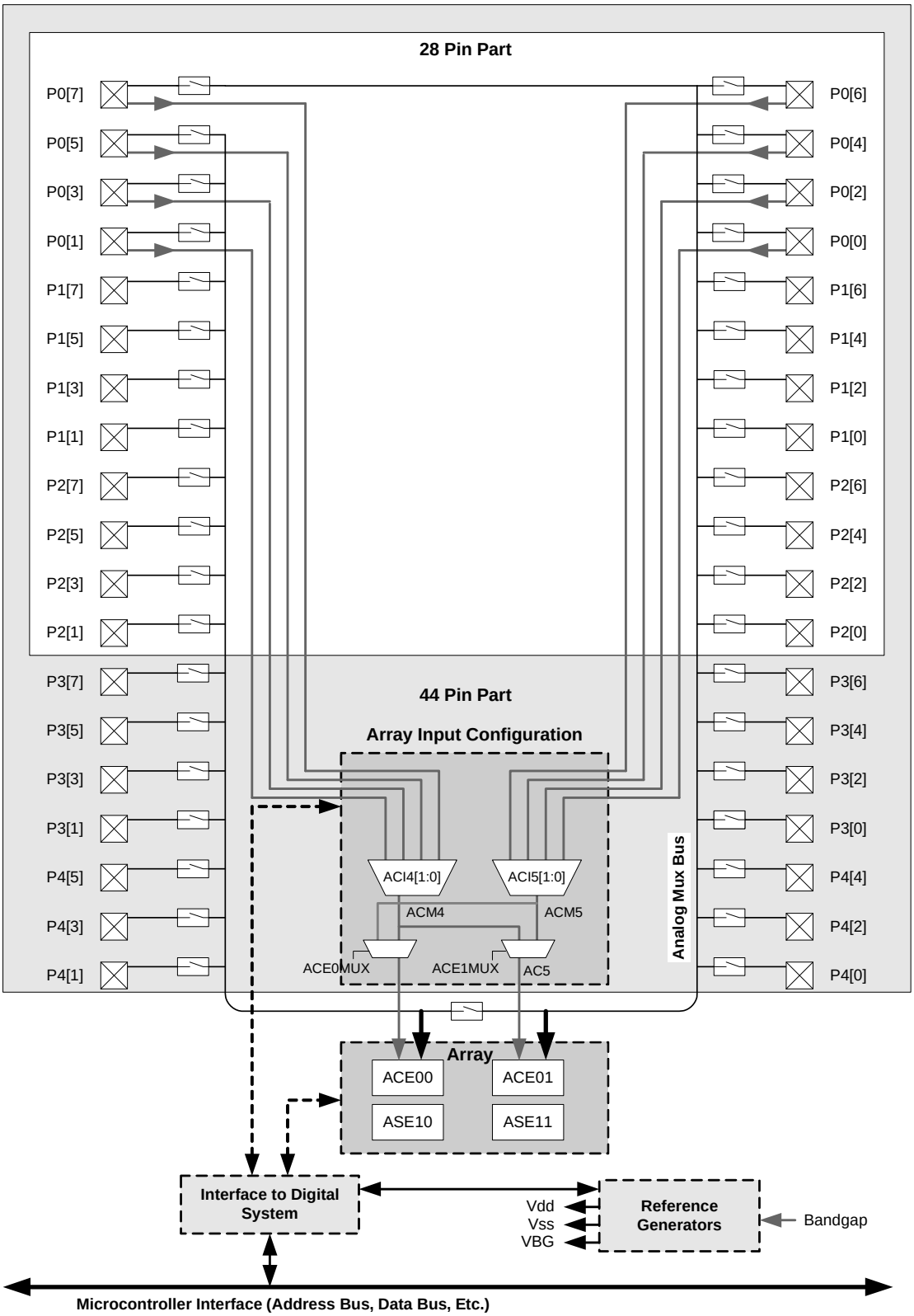

Figure 24-9. Two Column Limited Analog Pin Block Diagram for the CY8C28xxx

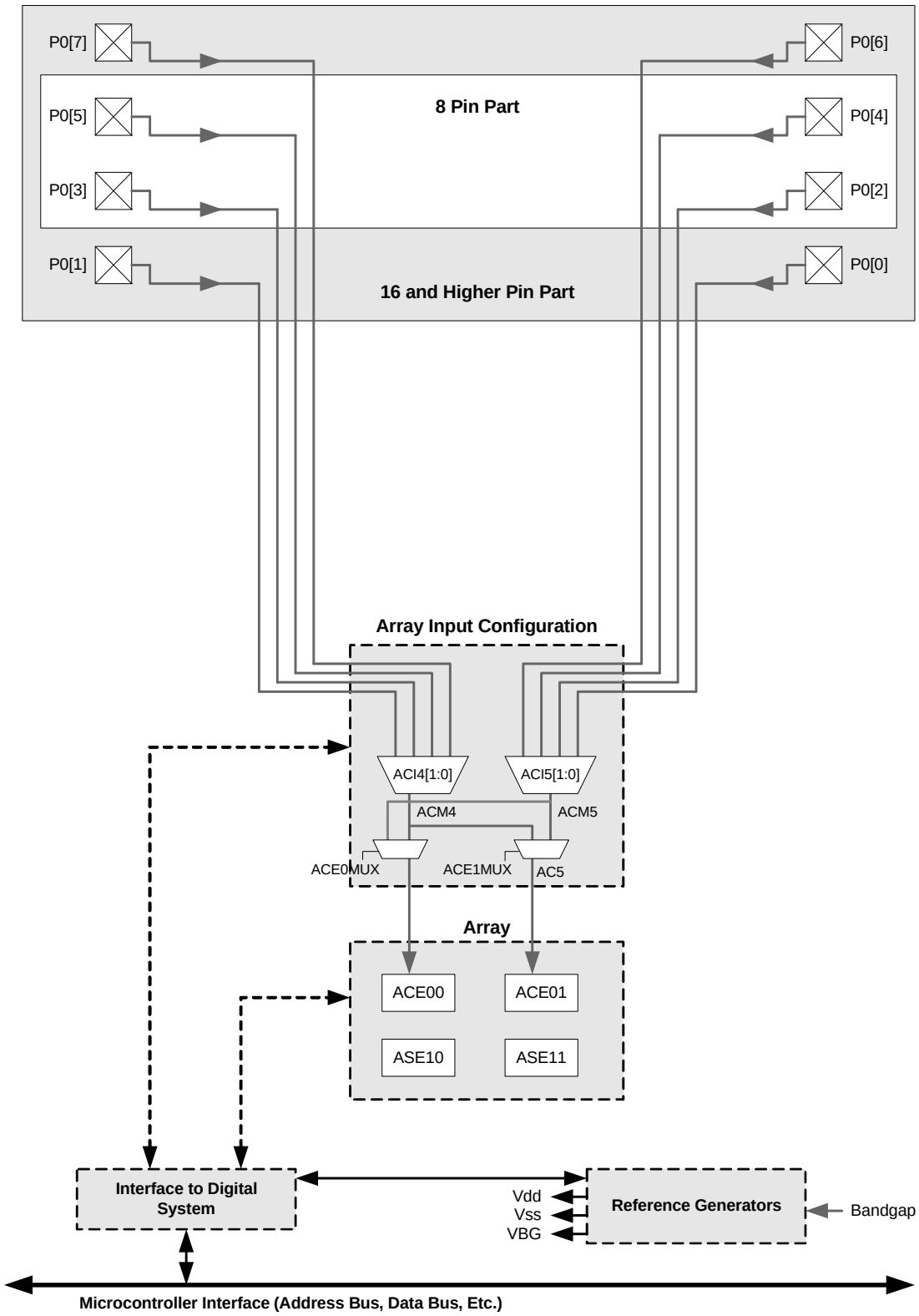

24.1.4 Analog Reference

The PSoC device is a single supply part, with no negative voltage available or applicable. The limited analog columns in CY8C28xxx PSoC devices support only one analog reference, which is the bandgap voltage VBG. This voltage is routed to the CT blocks in each analog column. VBG is available at both positive and negative inputs of each CT amplifier.

DAC functions are relative to the power supply range (Vss to Vdd). The bandgap VBG reference can be used to calibrate the supply range. Single slope ADC operation relies on a calibration step, using the internal bandgap reference or other user-supplied reference. If the bandgap reference is used, the ADC gives absolute voltage conversions.

For CT amplifiers configured as comparators (that is, open loop), a selected analog pin can be compared against another pin (fed from the other block), VBG, or a supply-referenced DAC voltage from the SC integrator. With the analog multiplexer bus in the CY8C28xxx PSoC devices, a Port 0 pin can be compared against another pin without using resources of the adjacent column.

24.1.5 Continuous Time PSoC Block

The CY8C28xxx Continuous Time blocks (Type ACE) are built around a low power, low offset amplifier. The CT block can be configured in two modes: As a unity gain buffer to drive to the other column or open loop as a comparator.

To configure as a comparator, select any NMux choice except feedback (FB). To enable the comparator bus output, the CompBus signal must be set in the ACE0xCR1 register. See Figure 24-10.

There are two discrete outputs from this block. These outputs connect to the following buses:

1. The comparator bus (CBUS), which is a digital bus that is a resource shared by all of the analog blocks in a column for that block. This output is available to system interface logic.
2. The local output bus (OUT), which is routed to the neighboring block.

Figure 24-10. Analog Continuous Time Block Diagram

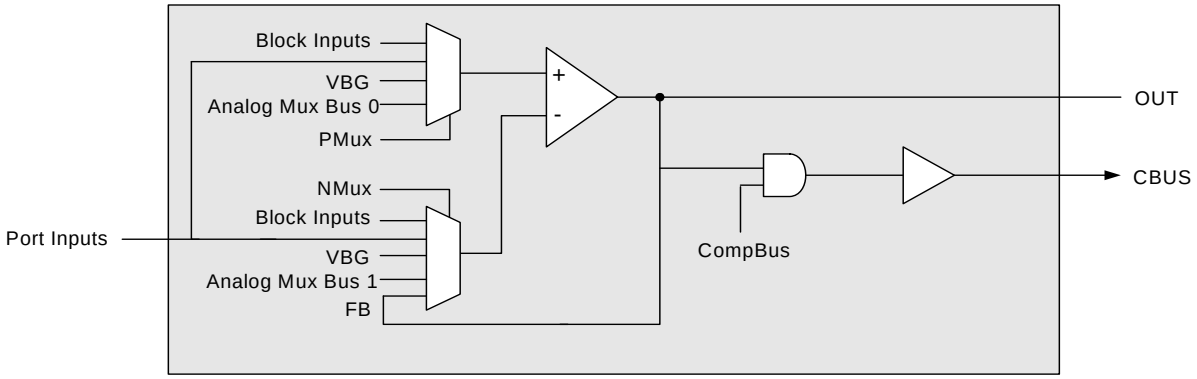

24.1.6 Switched Capacitor PSoC Block

The analog switched capacitor blocks accept a bit stream from either a digital block or a CT comparator. The SC block integrates this input and its output can then be connected to a CT block.

The low power SC block (Type ASE) is automatically enabled whenever the CT block is powered up. Refer to the ACE0xCR2 register definition in this chapter.

Figure 24-11. Analog Switch Capacitor PSoC Bloc

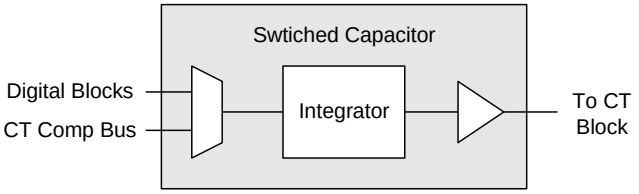

24.1.6.1 Application Description for the SC Block

The Analog Switched Capacitor (SC) blocks support DACs for comparator references. This application requires the use of one CT block. Analog-to-digital conversions can be done with a firmware-based successive approximation algorithm, using the SC block to provide a DAC reference.

The integrator speed can be modified to trade off accuracy for settling time.

24.2 PSoC Device Distinctions

The following are PSoC device distinctions for the CY8C28xxx PSoC devices.

1. The continuous time (CT) blocks of the limited analog column in the CY8C28xxx PSoC devices differ from other PSoC devices in the following ways:
   - The CT amplifier can only be configured as unity gain or open loop (comparator).
   - No separate low power comparator is available; however, this CT block amplifier is inherently low power and may be useful as a sleep mode comparator in many applications.
   - The column comparator bus is always driven from the CT block. When the CT amplifier is configured in Unity Gain mode, CompBus should be set to zero and the block outputs a zero on the comparator bus.
2. In the CY8C28xxx PSoC devices, the switched capacitor (SC) block consists of a low power integrator that is enabled whenever the CT block is enabled. It can be used to create a DAC reference for a CT comparator. The only configuration of the internal state of the SC block available to the user is input and output connections, and integrator speed by way of the FCap register bit.
3. The CY8C28xxx PSoC devices can use a VC3-based control for analog-to-digital conversion.
4. For the CY8C28xxx PSoC devices, all GPIO pins can connect to the internal analog mux bus. However, there are two analog mux buses in the CY8C28xxx. The odd bits GPIOs connect to left side analog mux bus (except P0[7]). The even bits GPIOs connect to right side analog mux bus (include P0[7]).
5. The temperature sensor input (V_{TEMP}) is connected through the ACE01 PMux. There is no special ground reference for the signal.

24.3 Register Definitions

The following registers are associated with the CY8C28xxx PSoC devices and are listed in address order within their system resource configuration. For a complete table of all analog system registers for all other PSoC devices, refer to the “Summary Table of the Analog Registers” on page 389.

Each register description has an associated register table showing the bit structure for that register. Register bits that are grayed out throughout this document are reserved bits and are not detailed in the register descriptions that follow.

24.3.1 Summary Table for Two Column Limited Analog System Registers

The following table lists the registers that are used in the CY8C28xxx PSoC devices, in address order within their system resource configuration. Note that there are no registers associated with the CY8C28xxx for the analog reference in the two column limited analog system, because there are no configuration options for that function. The bits that are grayed out are reserved bits. Reserved bits should always be written with a value of ‘0’.

Table 24-5. Summary Table for Two Column Limited Analog System Registers

Address	Register Name	Bit 7	Bit 6	Bit 5	Bit 4	Bit 3	Bit 2	Bit 1	Bit 0	Access : POR Value
ANALOG INTERFACE REGISTERS (page 453)										
0,E6h	DEC_CR0	ACC_IGEN[3:0]				ICLKS[0]	ACE_IGEN[2:0]		DCLKS[0]	RW : 00
0,E7h	DEC_CR1		IDEC	ICLKS0[3]	ICLKS0[2]	ICLKS0[1]	DCLKS[3]	DCLKS[2]	DCLKS[1]	RW : 00
1,E5h	ADC0_TR	CAPVAL_[7:0]								RW : 00
1,E6h	ADC1_TR	CAPVAL_[7:0]								RW : 00
CY8C28XXX REMAPPING, PSoC BLOCK, TYPE E, REGISTERS (page 454)										
1,73h	ACE_AMD_CR0					AMOD4[3:0]				RW : 00
1,75h	ACE_AMX_IN					ACI5[1:0]		ACI4[1:0]		RW : 00
1,76h	ACE_CMP_CR0			COMP[5:4]				AIN[5:4]		# : 00
1,77h	ACE_CMP_CR1			CLDIS[5:4]						RW : 00
1,79h	ACE_CMP_GI_EN	GIO5	GIO1	SEL5[1:0]		GIO4	GIO0	SEL4[1:0]		RW : 00
1,7Ah	ACE_ALT_CR0	LUT5[3:0]				LUT4[3:0]				RW : 00
1,7Bh	ACE_ABF_CR0	ACE1Mux	ACE0Mux							RW : 00
1,7Dh	ACE00CR1		CompBus	NMux[2:0]			PMux[2:0]			RW : 00
1,7Eh	ACE00CR2							FullRange	PWR	RW : 00
1,7Fh	ASE10CR0	FVal								RW : 00
1,83h	ACE_AMD_CR1					AMOD5[3:0]				RW : 00
1,85h	ACE_PWM_CR			HIGH[2:0]			LOW[1:0]		PWMEN	RW : 00
1,86h	ACE_ADC0_CR	CMPST	LOREN	SHEN		CBSRC	AUTO		ADCEN	# : 00
1,87h	ACE_ADC1_CR	CMPST	LOREN	SHEN		CBSRC	AUTO		ADCEN	# : 00
1,89h	ACE_CLK_CR0					AColumn5[1:0]		AColumn4[1:0]		RW : 00
1,8A	ACE_CLK_CR1	ACLK5[3:0]				ACLK4[3:0]				RW : 00
1,8Bh	ACE_CLK_CR3		SYS5	DIVCLK5[1:0]			SYS4	DIVCLK4[1:0]		RW : 00
1,8Dh	ACE01CR1		CompBus	NMux[2:0]			PMux[2:0]			RW : 00
1,8Eh	ACE01CR2							FullRange	PWR	RW : 00
1,8Fh	ASE11CR0	FVal								RW : 00

LEGEND
x An “x” before the comma in the address field indicates that this register can be accessed or written to no matter what bank is used.
Access is bit specific. Refer to the Register Details chapter on page 125.

Analog Interface Registers

24.3.2 DEC_CR0 Register

Add.	Name	Cols.	Bit 7	Bit 6	Bit 5	Bit 4	Bit 3	Bit 2	Bit 1	Bit 0	Access
0,E6h	DEC_CR0	4, 2	ACC_IGEN[3:0]				ICLKS[0]	ACE_IGEN[1:0]		DCLKS0	RW : 00

The Decimator Control Register 0 (DEC_CR0) contains control bits to access hardware support for both the Incremental ADC and the DELISG ADC.

This register can only be used with four and two analog column PSoC devices.

Bits 7 to 4: ACC_IGEN[3:0]. For incremental support, these bits select which column comparator bit will be gated by the output of a digital block. The output of that digital block is typically a PWM signal; the high time of which corresponds to the ADC conversion period. This ensures that the comparator output is only processed for the precise conversion time. The digital block selected for the gating function is controlled by ICLKS0 in this register, and ICLKS3, ICLKS2 and ICLKS1 bits in the DEC_CR1 register.

Bit 3: ICLKS0. In conjunction with ICLKS1, ICLKS2, and ICLKS3 in the DEC_CR1 register, these bits select up to one of 16 digital blocks (depending on the PSoC device resources) to provide the gating signal for an incremental ADC conversion.

Bits 2 and 1: ACE_IGEN[1:0]. For incremental support, these bits select which type E column comparator bit will be gated by the output of a digital block. The output of that digital block is typically a PWM signal, the high time of which corresponds to the ADC conversion period. This ensures that the comparator output is only processed for the precise conversion time. The digital block selected for the gating function is controlled by ICLKS[3:0]

Bit 0: DCLKS0. The decimator requires a timer signal to sample the current decimator value to an output register that may subsequently be read by the CPU. This timer period is set to be a function of the DELSIG conversion time and may be selected from up to one of twelve digital blocks (depending on the PSoC device resources) with DCLKS0 in this register and DCLKS3, DCLKS2, and DCLKS1 in the DEC_CR1 register. If the Decimation Rate bits are set in DECx_CR this setting is overwritten

For additional information, refer to the DEC_CR0 register on page 212.

24.3.3 DEC_CR1 Register

Address	Name	Cols.	Bit 7	Bit 6	Bit 5	Bit 4	Bit 3	Bit 2	Bit 1	Bit 0	Access
0,E7h	DEC_CR1	4		IDEC	ICLKS3	ICLKS2	ICLKS1	DCLKS3	DCLKS2	DCLKS1	RW : 00
		2		IDEC	ICLKS3	ICLKS2	ICLKS1	DCLKS3	DCLKS2	DCLKS1	RW : 00

The Decimator Control Register 1 (DEC_CR1) is used to configure the decimator prior to using it.

This register can only be used with four and two analog column PSoC devices.

Depending on how many analog columns your PSoC device has (see the Cols. column in the register table above), only certain bits are accessible to be read or written.

Bit 6: IDEC. Any function using the decimator requires a digital block timer to sample the current decimator value. Normally, the positive edge of this signal causes the decimator output to be sampled. However, when the IDEC bit is set, the negative edge of the selected digital block input causes the decimator value to be sampled.

Bits 5 to 0: ICLKSx and DCLKSx. The ICLKS3, ICLKS2, ICLKS1, DCLKS3, DCLKS2, and DCLKS1 bits in this register select the digital block sources for Incremental and DELSIG ADC hardware support (see the DEC_CR0 register).

For additional information, refer to the DEC_CR1 register on page 213.

24.3.4 ADCx_TR Register

Address	Name	Bit 7	Bit 6	Bit 5	Bit 4	Bit 3	Bit 2	Bit 1	Bit 0	Access
1,E5h	ADC0_TR	CAPVAL_[7:0]								RW : 00
1,E6h	ADC1_TR	CAPVAL_[7:0]								RW : 00

The ADC Column 0 and Column 1 Trim Register (ADCx_TR) controls a combination of capacitor and current values that determine the slope of the ADC voltage ramp.

Bits 7 to 0: CAPVAL_[7:0]. These bits are used to calibrate the ADC. Before the converter can be used, the capacitor array must be calibrated with a known voltage (for example, the bandgap voltage). The goal of this calibration process is to tune the ramp time (slope) such that the full-scale ADC input value results in a full-scale ADC code. This is accomplished by matching the ramp time to the desired full-scale conversion period, which is dependent on clock rate and resolution. The bits of the register have an inverted sense; that is, a '1' reduces the capacitance which increases the speed of the ramp and a '0' increases the capacitance which decreases the speed of the ramp.

For additional information, refer to the ADCx_TR register on page 301.

Remapped CY8C28xxx Registers

24.3.5 ACE_AMD_CR0 Register

Address	Name	Bit 7	Bit 6	Bit 5	Bit 4	Bit 3	Bit 2	Bit 1	Bit 0	Access
1,73h	ACE_AMD_CR0					AMOD4[3:0]				RW : 00

The Analog Type-E Modulation Control Register 0 is used to select the modulator bits used with each column.

Bits 3 to 0: AMOD4[3:0]. These bits control the selection of the MODBITs for analog column 4. The MODBIT is a modulated data stream input into a Switched Capacitor block. Three bits for each column allow a one of eight selection for the MODBIT. Sources include any of the analog column comparator buses, two global buses, and one broadcast bus. The default for this function is zero or off.

For additional information, refer to the ACE_AMD_CR0 register on page 249.

24.3.6 ACE_AMX_IN Register

Address	Name	Bit 7	Bit 6	Bit 5	Bit 4	Bit 3	Bit 2	Bit 1	Bit 0	Access
1,75h	ACE_AMX_IN					ACI5[1:0]		ACI4[1:0]		RW : 00

The Analog Input Select Register controls the analog muxes that feed signals in from port pins into the analog column.

Bits 3 to 0: ACIx[1:0]. The ACI5[1:0] and ACI4[1:0] bits control the analog muxes that feed signals in from port pins into the analog column. The analog column can have up to eight port bits connected to its muxed input. ACI5 and ACI4 are used to select among even and odd pins. The ACExMux bit field controls the bits for those muxes and is located in the Analog Output Buffer Control Register (ACE_ABF_CR0).

For additional information, refer to the ACE_AMX_IN register on page 250.

24.3.7 ACE_CMP_CR0 Register

Address	Name	Bit 7	Bit 6	Bit 5	Bit 4	Bit 3	Bit 2	Bit 1	Bit 0	Access
1,76h	ACE_CMP_CR0			COMP[5:4]				AINT[5:4]		RW : 00

The Analog Type-E Comparator Bus 0 Register is used to poll the analog column comparator bits and select column interrupts.

Bits 5 and 4: COMP[5:4]. These bits are the read only bits corresponding to the comparator bits in each limited analog column. By default, they are synchronized to the column clock and thus may be reliably polled by the CPU.

Bits 1 and 0: AINT[5:4]. These bits choose between the limited analog column data and the dedicated incremental PWM terminal count as the analog interrupt source for this column.

For additional information, refer to the ACE_CMP_CR0 register on page 251.

24.3.8 ACE_CMP_CR1 Register

Address	Name	Bit 7	Bit 6	Bit 5	Bit 4	Bit 3	Bit 2	Bit 1	Bit 0	Access
1,77h	ACE_CMP_CR1			CLDIS[5:4]						RW : 00

The Analog Type-E Comparator Bus 1 Register is used to override the analog column comparator synchronization for analog columns 4 and 5.

Bits 5 and 4: CLDIS[5:4]. The CLDIS bits are used to override the analog column comparator synchronization. When these bits are set, the given column is not synchronized by the column clock. This capability is typically used to allow a continuous time comparator result to propagate directly to the interrupt controller during sleep. Because the master clocks (except the 32 kHz clock) are turned off during sleep, the synchronizer must be bypassed.

For additional information, refer to the ACE_CMP_CR1 register on page 252.

24.3.9 ACE_CMP_GI_EN Register

Address	Name	Bit 7	Bit 6	Bit 5	Bit 4	Bit 3	Bit 2	Bit 1	Bit 0	Access
1,79h	ACE_CMP_GI_EN	GIO5	GIO1	SEL5[1:0]		GIO4	GIO0	SEL4[1:0]		RW : 00

The Comparator Bus to Global Input Enable Register controls options for driving the analog comparator bus and column clock to the global bus.

Bit 7: GIO5. This bit drives the selected column 5 signal to GIO5.

Bit 6: GIO1. This bit drives the selected column 5 signal to GIO1.

Bits 5 and 4: SEL5[1:0]. These bits select the column 5 signal to output.

Bit 3: GIO4. This bit drives the selected column 4 signal to GIO4.

Bit 2: GIO0. This bit drives the selected column 4 signal to GIO0.

Bits 1 and 0: SEL4[1:0]. These bits select the column 4 signal to output.

For additional information, refer to the ACE_CMP_GI_EN register on page 253.

24.3.10 ACE_ALT_CR0 Register

Address	Name	Bit 7	Bit 6	Bit 5	Bit 4	Bit 3	Bit 2	Bit 1	Bit 0	Access
1,7Ah	ACE_ALT_CR0	LUT5[3:0]				LUT4[3:0]				RW : 00

The Analog LUT Control Register is used to select the logic function.

Bits 7 to 4 and 3 to 0: LUTx[3:0]. These bits control the selection of logic functions that may be selected for the analog comparator bits in column 4 and column 5. A one of 16 look-up table (LUT) is applied to the outputs of each column comparator bit and optionally a neighbor bit to implement two input logic functions.

Table 24-1 shows the available functions, where the A input applies to the selected column, and the B input applies to the next most significant neighbor column. Column 4 settings apply to combinations of column 4 and column 5. Column 5 settings apply to column 1 with B = 0.

For additional information, refer to the ACE_ALT_CR0 register on page 254.

24.3.11 ACE_ABF_CR0 Register

Address	Name	Bit 7	Bit 6	Bit 5	Bit 4	Bit 3	Bit 2	Bit 1	Bit 0	Access
1,7Bh	ACE_ABF_CR0	ACE1Mux	ACE0Mux							RW : 00

The Type-E Analog Output Buffer Control Register 0 controls analog input muxes from Port 0.

Bit 7: ACE1Mux. A mux selects the output of ACE column 4 input mux or ACE column 5 input mux. When set, this bit sets the ACE column 5 input to ACE column 4 input mux output.

Bit 6: ACE0Mux. When set, this bit sets column 4 input to column 5 input mux output.

For additional information, refer to the ACE_ABF_CR0 register on page 255.

Continuous Time PSoC Block Registers

24.3.12 ACExxCR1 Register

Address	Name	Bit 7	Bit 6	Bit 5	Bit 4	Bit 3	Bit 2	Bit 1	Bit 0	Access
1,7Dh	ACE00CR1		CompBus	NMux[2:0]			PMux[2:0]			RW : 00
1,8Dh	ACE01CR1		CompBus	NMux[2:0]			PMux[2:0]			RW : 00

The Analog Continuous Time Type E Block Control Register 1 is one of two registers used to configure the type E continuous time PSoC block.

Bit 6: CompBus. This bit determines whether the comparator bus is driven from the amplifier output or driven low. If the CT block is configured in Unity Gain mode, this bit should be set to zero so the comparator bus is driven low.

Bits 5 to 3: NMux[2:0]. These bits control the multiplexing of inputs to the inverting input of the opamp. There are several input choices from outside the block, plus an internal feedback selection.

Bits 2 to 0: PMux[2:0]. These bits control the multiplexing of the five inputs to the non-inverting input of the opamp.

For additional information, refer to the ACExxCR1 register on page 256.

24.3.13 ACExxCR2 Register

Address	Name	Bit 7	Bit 6	Bit 5	Bit 4	Bit 3	Bit 2	Bit 1	Bit 0	Access
1,7Eh	ACE00CR2							FullRange	PWR	RW : 00
1,8Eh *	ACE01CR2							FullRange	PWR	RW : 00

The Analog Continuous Time Type E Block Control Register 2 is one of two registers used to configure the type E continuous time PSoC block.

Bit 1: FullRange. For slightly higher power, this bit enables inputs from Vss to Vdd.

Bit 0: PWR. This bit is used to power up the CT block and SC block in the column.

For additional information, refer to the ACExxCR2 register on page 257.

Switched Capacitor PSoC Block Register

24.3.14 ASExxCR0 Register

Add.	Name	Bit 7	Bit 6	Bit 5	Bit 4	Bit 3	Bit 2	Bit 1	Bit 0	Access
1,7Fh	ASE10CR0	FVal								RW : 00
1,8Fh	ASE11CR0	FVal								RW : 00

The Analog Switch Capacitor Type E Block Control Register 0 is used to configure a type E switched capacitor PSoC block.

Bit 7: FVal. This bit controls the size of the bandwidth of the filler in the Type E block.

For additional information, refer to the ASExxCR0 register on page 258.

24.3.15 ACE_AMD_CR1 Register

Address	Name	Bit 7	Bit 6	Bit 5	Bit 4	Bit 3	Bit 2	Bit 1	Bit 0	Access
1,83h	ACE_AMD_CR1					AMOD5[3:0]				RW : 00

The Type-E Analog Modulation Control Register 1 is used to select the modulator bits used with each column.

Bits 3 to 0: AMOD1[3:0]. These bits control the selection of the MODBITs for analog column 1. See the AMD_CR0 register above.

For additional information, refer to the ACE_AMD_CR1 register on page 261.

24.3.16 ACE_PWM_CR Register

Address	Name	Bit 7	Bit 6	Bit 5	Bit 4	Bit 3	Bit 2	Bit 1	Bit 0	Access
1,85h	ACE_PWM_CR			HIGH[2:0]			LOW[1:0]		PWMEN	RW : 00

The ADC PWM Control Register controls the parameters for the dedicated ADC PWM. This PWM function uses VC3 as its input clock so all periods are in terms of VC3 terminal counts.

Bits 5 to 3: HIGH[2:0]. These bits set the PWM high time in terms of VC3 periods.

Bits 2 and 1: LOW[1:0]. These bits set the PWM low time in terms of VC3 periods.

Bit 0: PWMEN. This bit starts and stops the PWM. When this bit is disabled, the PWM output state is always low. When this bit is enabled, the following two scenarios can occur:

1. If the low time programmed is greater than 0, the PWM waits for the first VC3 terminal count before starting the low time count.
2. If the low time programmed is 0, the PWM will wait for the first VC3 terminal count before going high, and then will start counting VC3 periods for the purpose of generating the PWM terminal count. The PWM will stay high continually until enabled.

For additional information, refer to the ACE_PWM_CR register on page 262.

24.3.17 ACE_ADCx_CR Register

Address	Name	Bit 7	Bit 6	Bit 5	Bit 4	Bit 3	Bit 2	Bit 1	Bit 0	Access
1,86h	ACE_ADC0_CR	CMPST	LOREN	SHEN		CBSRC	AUTO		ADCEN	# : 00
1,87h	ACE_ADC1_CR	CMPST	LOREN	SHEN		CBSRC	AUTO		ADCEN	# : 00

The ADC Column 0 and Column 1 Configuration Register controls the single slope ADC in each column.

Bit 7: CMPST. This bit is a read only status bit. It provides information at the end of an ADC conversion as to whether the analog comparator tripped or did not trip. This can be used to provide an over-range bit. For example, the range of an 8-bit conversion is 0 – 255, 256 codes. However, to achieve this range exactly, the PWM high time must define 255 clocks (0 clocks corresponding to a 0 ADC result). This is possible for a digital block PWM which has an arbitrary high and low time programming with respect to the input clock. However, because the dedicated ADC PWM has only a limited number of divide selections based on the VC3 period, the high time will normally be in powers of two. For example, in an 8-bit conversion, the PWM ADC will be set for 256 clocks, rather than 255, and this gives an extra code of 0 to 256. For the 256th code, the 8-bit counter value will roll over and therefore be indistinguishable from code 0. However, the CMPST bit will indicate that this is actually the 256th code.

Bit 6: LOREN. This bit controls the range of the base current level of the ADC. A ‘0’ in this bit position is the normal current range. A ‘1’ in this bit selects the low current range that divides the current by an approximate factor of four.

Bit 5: SHEN. This bit controls sample and hold. When this bit is set to ‘1’, sample and hold is enabled and controlled by the ADC PWM selection if the AUTO mode bit is set. When this bit is set to ‘0’, sample and hold is disabled, and the comparator voltage input follows the input pin to which it is connected.

Bit 3: CBSRC. This bit controls the source of the comparator bus output to the digital blocks. By default, when this bit is ‘0’, the synchronized analog comparator output is the source for the digital comparator bus. When this bit is set to ‘1’, the selected PWM terminal count becomes the digital comparator bus source. In ADC operating mode, this bit is set to ‘1’ to implement Timer Capture digital interface and set to ‘0’ to implement Counter Enable digital interface.

Bit 2: AUTO. When enabled, this bit allows the conversion to be controlled by a selected PWM signal.

Bit 0: ADCEN. By default, the ADC circuit is powered down. When the ADCEN bit is set to ‘1’, the circuit is ready for use. The ADCEN bit must be set as part of the initial configuration, before enabling the PWM in AUTO mode.

For additional information, refer to the ACE_ADCx_CR register on page 263.

24.3.18 ACE_CLK_CR0 Register

Address	Name	Bit 7	Bit 6	Bit 5	Bit 4	Bit 3	Bit 2	Bit 1	Bit 0	Access
1,89h	ACE_CLK_CR0					AColumn5[1:0]		AColumn4[1:0]		RW : 00

The Type-E Analog Column Clock Control Register 0 is used to select the clock source for an individual analog column.

Bits 3 to 0: AColumnx[1:0]. An analog column clock generator is provided for each column. The bits in this register select the source for each column clock generator.

There are four selections for each clock: VC1, VC2, ACLK0, and ACLK1. VC1 and VC2 are the programmable global system clocks. ACLK0 and ACLK1 sources are each selected from up to one of four digital block outputs (functioning as clock generators) as selected by ACE_CLK_CR1.

For additional information, refer to the ACE_CLK_CR0 register on page 264.

24.3.19 ACE_CLK_CR1 Register

Address	Name	Bit 7	Bit 6	Bit 5	Bit 4	Bit 3	Bit 2	Bit 1	Bit 0	Access
1,8Ah	ACE_CLK_CR1	ACLK5[3:0]				ACLK4[3:0]				RW : 00

The Type-E Analog Column Clock Control Register 1 selects the clock source for an individual analog column.

Bits 7 to 0: ACLKx[3:0]. Each nibble is used to form 16:1 MUX to select 1 out of 16 dig row output for Type E column clocks.

For additional information, refer to the ACE_CLK_CR1 register on page 265.

24.3.20 ACE_CLK_CR3 Register

Address	Name	Bit 7	Bit 6	Bit 5	Bit 4	Bit 3	Bit 2	Bit 1	Bit 0	Access
1,8Bh	ACE_CLK_CR3		SYS5	DIVCLK5[1:0]			SYS4	DIVCLK4[1:0]		RW : 00

The Type-E Analog Clock Source Control Register 3 controls additional options for analog column clock generation. It allows an option for selecting SYSCLK directly as the column clock source, as well as additional divide values on the selected source.

Bit 6: SYS5. This bit selects SYSCLK as the source for the analog column 5 clocking.

Bits 5 and 4: DIVCLK5[1:0]. These bits control an optimal divide value on the selected clock in column 5.

Bit 2: SYS4. This bit selects SYSCLK as the source for the analog column 4 clocking.

Bits 1 and 0: DIVCLK4[1:0]. These bits control an optimal divide value on the selected clock in column 4.

For additional information, refer to the ACE_CLK_CR3 register on page 266.

Section F: System Resources

The System Resources section discusses the system resources that are available for the PSoC® device and the registers associated with those resources. This section encompasses the following chapters:

- Digital Clocks on page 465
- Multiply Accumulate (MAC) on page 477
- Decimator on page 483
- I²C on page 493
- Internal Voltage Reference on page 511
- System Resets on page 513
- POR and LVD on page 523
- I/O Analog Multiplexer on page 525
- 10-Bit SAR ADC Controller on page 537

Top-Level System Resources Architecture

The following figure displays the top-level architecture of the PSoC's system resources. Each component of the figure is discussed at length in this section. Note that the CY8C28x03 PSoC devices do not support the Decimator system resource. All other PSoC devices support all the system resources found in this section.

PSoC System Resources

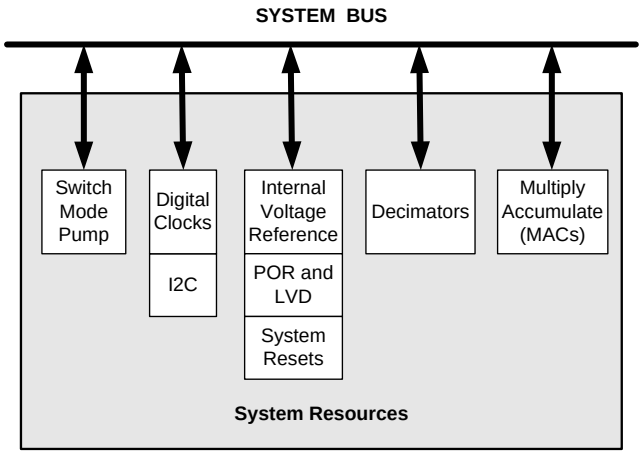

Interpreting the System Resources Documentation

Information in this section covers all PSoC devices with a base part number of CY8C28xxx. The following table lists the resources available for specific device groups with a check mark or appropriate information. Blank fields denote that the system resource is not available.

Availability of System Resources for CY8C28xxx Devices

CY8C28xxx Part Number	Digital Clocks	I²C	Internal Voltage Ref	POR and LVD	System Resets	Multiply Accumulate	CapSense	SAR10 ADC	XRES Pin	Decimators
CY8C28x03	✓	2	✓	✓	✓	2		✓	✓	0
CY8C28x13	✓	1	✓	✓	✓	2	✓	✓	✓	2
CY8C28x23	✓	2	✓	✓	✓	2			✓	2
CY8C28x33	✓	1	✓	✓	✓	2	✓	✓	✓	4
CY8C28x43	✓	2	✓	✓	✓	2		✓	✓	4
CY8C28x45	✓	2	✓	✓	✓	2	✓	✓	✓	4
CY8C28x52	✓	1	✓	✓	✓	2	✓		✓	4

System Resources Register Summary

The following table lists all the PSoC registers for the system resources, in address order, within their system resource configuration. The bits that are grayed out are reserved bits. If these bits are written, they should always be written with a value of '0'.

Note that all PSoC devices have a combination of 4, 2, or 1 analog columns and 4, 2 or 1 digital rows. The registers that are specifically constrained by the number of analog columns have the number of analog columns (Cols.) listed within the Address column of the table. The registers specifically pertaining to digital rows have the number of rows (Rows) listed within the Address column of the table. To determine the number of analog columns and digital rows in your PSoC device, refer to the table titled "PSoC Device Characteristics" on page 387.

Summary Table of the System Resource Registers

Address	Name	Bit 7	Bit 6	Bit 5	Bit 4	Bit 3	Bit 2	Bit 1	Bit 0	Access
DIGITAL CLOCK REGISTERS (page 469)										
0,DAh 4 Cols.	INT_CLR0	VC3	Sleep	GPIO	Analog 3	Analog 2	Analog 1	Analog 0	V Monitor	RW : 00
2 Cols.		VC3	Sleep	GPIO			Analog 1	Analog 0	V Monitor	RW : 00
0,E0h 4 Cols.	INT_MSK0	VC3	Sleep	GPIO	Analog 3	Analog 2	Analog 1	Analog 0	V Monitor	RW : 00
2 Cols.		VC3	Sleep	GPIO			Analog 1	Analog 0	V Monitor	RW : 00
1,DDh	OSC_GO_EN	SLPINT	VC3	VC2	VC1	SYSCLKX2	SYSCLK	CLK24M	CLK32K	RW : 00
1,DEh	OSC_CR4							VC3 Input Select[1:0]		RW : 00
1,DFh	OSC_CR3	VC3 Divider[7:0]								RW : 00
1,E0h	OSC_CR0	32k Select	PLL Mode	No Buzz	Sleep[1:0]		CPU Speed[2:0]			RW : 00
1,E1h	OSC_CR1	VC1 Divider[3:0]				VC2 Divider[3:0]				RW : 00
1,E2h	OSC_CR2	PLLGAIN			SLP_EXTEND	WDR32_SE	EXTCLKEN	RSVD	SYSCLKX2DIS	RW : 00
MULTIPLY ACCUMULATE (MAC) REGISTERS (page 478)										
0,E8h	MUL0_X	Data[7:0]								W : XX
0,E9h	MUL0_Y	Data[7:0]								W : XX
0,EAh	MUL0_DH	Data[7:0]								R : XX
0,EBh	MUL0_DL	Data[7:0]								R : XX
0,ECh	MAC0_X/ ACC0_DR1	Data[7:0]								RW : 00
0,EDh	MAC0_Y/ ACC0_DR0	Data[7:0]								RW : 00
0,EEh	MAC0_CL0/ ACC0_DR3	Data[7:0]								RW : 00
0,EFh	MAC0_CL1/ ACC0_DR2	Data[7:0]								RW : 00
DECIMATOR REGISTERS (page 488)										
0,A0h	DEC0_DH	Data High Byte[7:0]								RC : XX
0,A1h	DEC0_DL	Data Low Byte[7:0]								RC : XX
0,A2h	DEC1_DH	Data High Byte[7:0]								RC : XX
0,A3h	DEC1_DL	Data Low Byte[7:0]								RC : XX
0,A4h	DEC2_DH	Data High Byte[7:0]								RC : XX
0,A5h	DEC2_DL	Data Low Byte[7:0]								RC : XX
0,A6h	DEC3_DH	Data High Byte[7:0]								RC : XX
0,A7h	DEC3_DL	Data Low Byte[7:0]								RC : XX
0,E6h	DEC_CR0	ACC_IGEN[3:0]				ICLKS[0]	ACE_IGEN[2:0]		DCLKS[0]	RW : 00
0,E7h	DEC_CR1		IDEC	ICLKS0[3]	ICLKS0[2]	ICLKS0[1]	DCLKS[3]	DCLKS[2]	DCLKS[1]	RW : 00
1,91h	DEC0_CR0	POL	GOOO	GOOE			DATA_IN[2:0]			RW : 00
1,92h	DEC_CR3	DEC1_EN	CLK_IN1[2:0]			DEC0_EN	CLK_IN0[2:0]			RW : 00
1,95h	DEC1_CR0	POL	GOOO	GOOE			DATA_IN[2:0]			RW : 00
1,96h	DEC_CR4	DEC3_EN	CLK_IN3[2:0]			DEC2_EN	CLK_IN2[2:0]			RW : 00
1,99h	DEC2_CR0	POL	GOOO	GOOE			DATA_IN[2:0]			RW : 00

Summary Table of the System Resource Registers *(continued)*

Address	Name	Bit 7	Bit 6	Bit 5	Bit 4	Bit 3	Bit 2	Bit 1	Bit 0	Access
1,9Ah	DEC_CR5					DSCLK[3:0]				RW : 00
1,9Dh	DEC3_CR0	POL	GOOO	GOOE			DATA_IN[2:0]			RW : 00
1,D4h	DEC0_CR	Mode[1:0]		Data Out Shift[1:0]		Data Format	Decimation Rate[2:0]			RW : 00
1,D5h	DEC1_CR	Mode[1:0]		Data Out Shift[1:0]		Data Format	Decimation Rate[2:0]			RW : 00
1,D6h	DEC2_CR	Mode[1:0]		Data Out Shift[1:0]		Data Format	Decimation Rate[2:0]			RW : 00
1,D7h	DEC3_CR	Mode[1:0]		Data Out Shift[1:0]		Data Format	Decimation Rate[2:0]			RW : 00
I^2C REGISTERS (page 497)										
0,67h	I2C1_DR	Data[7:0]								RW : 00
0,D6h	I2C0_CFG		PSelect	Bus Error IE	Stop IE	Clock Rate[1:0]		Enable Mas-ter	Enable Slave	RW : 00
0,D7h	I2C0_SCR	Bus Error	Lost Arb	Stop Status	ACK	Address	Transmit	LRB	Byte Complete	R : 00
0,D8h	I2C0_DR	Data[7:0]								RW : 00
0,D9h	I2C0_MSCR					Bus Busy	Master Mode	Restart Gen	Start Gen	R : 00
0,E4h	I2C1_SCR	Bus Error	Lost Arb	Stop Status	ACK	Address	Transmit	LRB	Byte Complete	R : 00
0,E5h	I2C1_MSCR					Bus Busy	Master Mode	Restart Gen	Start Gen	R : 00
1,6Bh	I2C1_CFG		PSelect	Bus Error IE	Stop IE	Clock Rate[1:0]		Enable Mas-ter	Enable Slave	RW : 00
1,ADh	I2C0_ADDR	HwAddrEn	Addr[6:0]							RW : 00
1,AEh	I2C1_ADDR	HwAddrEn	Addr[6:0]							RW : 00
INTERNAL VOLTAGE REFERENCE REGISTER (page 511)										
1,EAh 4,2 Cols.	BDG_TR		AGNDBYP	TC[1:0]		V[3:0]				RW : 00
SYSTEM RESET REGISTERS (page 514)										
0,FEh	CPU_SCR1	IRESS			SLIMO	ECO EXW	ECO EX		IRAMDIS	# : 00
0,FFh	CPU_SCR0	GIES		WDRS	PORS	Sleep			STOP	# : XX
POR AND LVD REGISTERS (page 523)										
1,E3h 4,2 Cols.	VLT_CR	SMP		PORLEV[1:0]		LVDTBEN	VM[2:0]			RW : 00
1,E4h 4,2 Cols.	VLT_CMP						PUMP	LVD	PPOR	R : 00
I/O ANALOG MULTIPLEXER REGISTERS (page 528)										
0,61h	AMUX_CFG	ABusMux1	ABusMux0	INTCAP[1:0]		MUXCLK[2:0]			EN	RW : 00
0,FCh	IDAC1_D	IDAC1[7:0]								RW : 00
0,FDh	IDAC0_D	IDAC0[7:0]								RW : 00
1,6Ah	AMUX_CFG1	ABusMux3	ABusMux2	ACol3Mux	ACol0Mux	MUXCLKR[2:0]			ENR	RW : 00
1,AFh	AMUX_CLK	TSYNC		CLKTOR	CLKTOL	CLKRSYNC[1:0]		CLKSYNC[1:0]		RW : 00
1,D8h	MUX_CR0	ENABLE[7:0]								RW : 00
1,D9h	MUX_CR1	ENABLE[7:0]								RW : 00
1,DAh	MUX_CR2	ENABLE[7:0]								RW : 00
1,DBh	MUX_CR3	ENABLE[7:0]								RW : 00
1,ECh	MUX_CR4	ENABLE[7:0]								RW : 00
1,EDh	MUX_CR5	ENABLE[7:0]								RW : 00
1,FDh	IDAC_CR0	SplitMux	MuxClkGEL	OSCMDR[1:0]		IRANGEL	OSCMDL[1:0]		ENL	RW : 00
REAL TIME CLOCK REGISTERS (page 534)										
1,A4h	RTC_H			HR1[1:0]		HR0[3:0]				R : 00
1,A5h	RTC_M		MIN1[2:0]			MIN0[3:0]				R : 00
1,A6h	RTC_S		SEC[2:0]			SEC[3:0]				RW : 00
1,A7h	RTC_CR	TREG[1:0]		INT_EN	CLKSE	INT_SEL[1:0]		SYNC_RD	RT_EN	RW : 00

Summary Table of the System Resource Registers *(continued)*

Address	Name	Bit 7	Bit 6	Bit 5	Bit 4	Bit 3	Bit 2	Bit 1	Bit 0	Access
10-BIT SAR ADC CONTROLLER REGISTERS (page 541)										
0,6Ah	SADC_DH	Data High[7:0]								R : 00
0,6Bh	SADC_DL	Data Low[7:0]								R : 00
1,71h	SADC_TSCR0	TS_INCMP_SEL[3:0]				INCMP_INV	INCMP_EN	CMPH_EN	CMPL_EN	RW : 00
1,72h	SADC_TSCR1		TS_CMPH_SEL[2:0]				TS_CMPL_SEL[2:0]			RW : 00
1,81h	SADC_TSCMPL	TS_CMPH[7:0]								RW : 00
1,82h	SADC_TSCMPH	TS_CMPH[7:0]								RW : 00
1,A8h	SADC_CR0		ADC_CHS[3:0]				READY	START/ ONGOING	ADC_EN	RW : 00
1,A9h	SADC_CR1	CVTMD[1:0]		TIGSEL[1:0]		CLKSEL[2:0]			ALIGN_EN	RW : 00
1,AAh	SADC_CR2	REFSEL	BUFEN	VDBEN	VDB_CLKSEL	FREERUN				RW : 00
1,ABh	SADC_CR3	LALIGN					ADC_TRIM0[2:0]			RW : 04h
1,ACh	SADC_CR4	EXTREF								# : 02h

LEGEND
X The value after power on reset is unknown.
C Clearable register or bits.
R Read register or bit(s).
W Write register or bit(s).
Access is bit specific. Refer to the Register Details chapter on page 125 for additional information.

25. Digital Clocks

This chapter discusses the Digital Clocks and their associated registers. It serves as an overview of the clocking options available in the PSoC® devices. For detailed information on specific oscillators, see the individual oscillator chapters in the section called "PSoC® Core" on page 35. For a complete table of the digital clock registers, refer to the "Summary Table of the System Resource Registers" on page 462. For a quick reference of all PSoC registers in address order, refer to the Register Details chapter on page 125.

25.1 Architectural Description

The PSoC M8C core has a large number of clock sources that increase the flexibility of the PSoC mixed-signal array, as listed in Table 25-1 and illustrated in Figure 25-1.

Table 25-1. System Clocking Signals and Definitions

Signal	Definition
SYSCLKX2	Twice the frequency of SYSCLK.
SYSCLK	Either the direct output of the Internal Main Oscillator or the direct input of the EXTCLK pin while in external clocking mode.
CPUCLK	SYSCLK is divided down to one of eight possible frequencies, to create CPUCLK which determines the speed of the M8C. See OSC_CR0 in the Register Definitions section of this chapter.
VC1	SYSCLK is divided down to create Variable Clock 1 (VC1). See OSC_CR1 in the Register Definitions section of this chapter. Division range is from 1 to 16.
VC2	VC1 is divided down to create Variable Clock 2 (VC2). See OSC_CR1 in the Register Definitions section of this chapter. Division range is from 1 to 16.
VC3	Divides down either SYSCLK, VC1, VC2, or SYSCLKX2 to create Variable Clock 3 (VC3). Division range is from 1 to 256. See OSC_CR3 and OSC_CR4 in the Register Definitions section of this chapter.
CLK32K	Either the Internal Low Speed Oscillators or the External Crystal Oscillators output. See OSC_CR0 in the Register Definitions section of this chapter.
CLK24M	The internally generated 24 MHz clock by the IMO. By default, this clock drives SYSCLK; however, an external clock may be used by enabling EXTCLK mode. Also, the IMO may be put into a slow mode using the SLIMO bit which will change the speed of the IMO and the CLK24M to 6 MHz.
SLEEP	One of eight sleep intervals may be selected from 1.95 ms to 16 seconds. See OSC_CR0/OSC_CR2 in "Register Definitions" on page 469 of this chapter.

25.1.1 Internal Main Oscillator

The Internal Main Oscillator (IMO) is the foundation upon which almost all other clock sources in the PSoC mixed-signal array are based. The default mode of the IMO creates a 24 MHz reference clock that is used by many other circuits in the PSoC device. The IMO may also be configured to operate in a PLL mode where the oscillator is locked to a precision 32.768 kHz crystal reference. The PSoC device has an option to replace the IMO with an externally supplied clock that will become the base for all of the clocks the IMO normally serves. The internal base clock net is called SYSCLK and may be driven by either the IMO or an external clock (EXTCLK).

Whether the external clock or the internal main oscillator is selected, all PSoC device functions are clocked from a derivative of SYSCLK or are resynchronized to SYSCLK. All external asynchronous signals (through row inputs), as well as the selected 32.768 kHz crystal oscillator, are resynchronized to SYSCLK for use in the digital PSoC blocks.

Some PSoC devices contain the option to lower the internal oscillator's system clock from 24 MHz to 6 MHz. See the "Architectural Description" on page 81, in the Internal Main Oscillator chapter, for more information.

The IMO is discussed in detail in the Internal Main Oscillator (IMO) chapter on page 81.

25.1.2 Internal Low Speed Oscillator

The Internal Low Speed Oscillator (ILO) is always on unless the device is operating off an external crystal. The ILO is available as a general clock, but is also the clock source for the sleep and watchdog timers.

The ILO is discussed in detail in the Internal Low Speed Oscillator (ILO) chapter on page 85.

Figure 25-1. Overview of PSoC Clock Sources

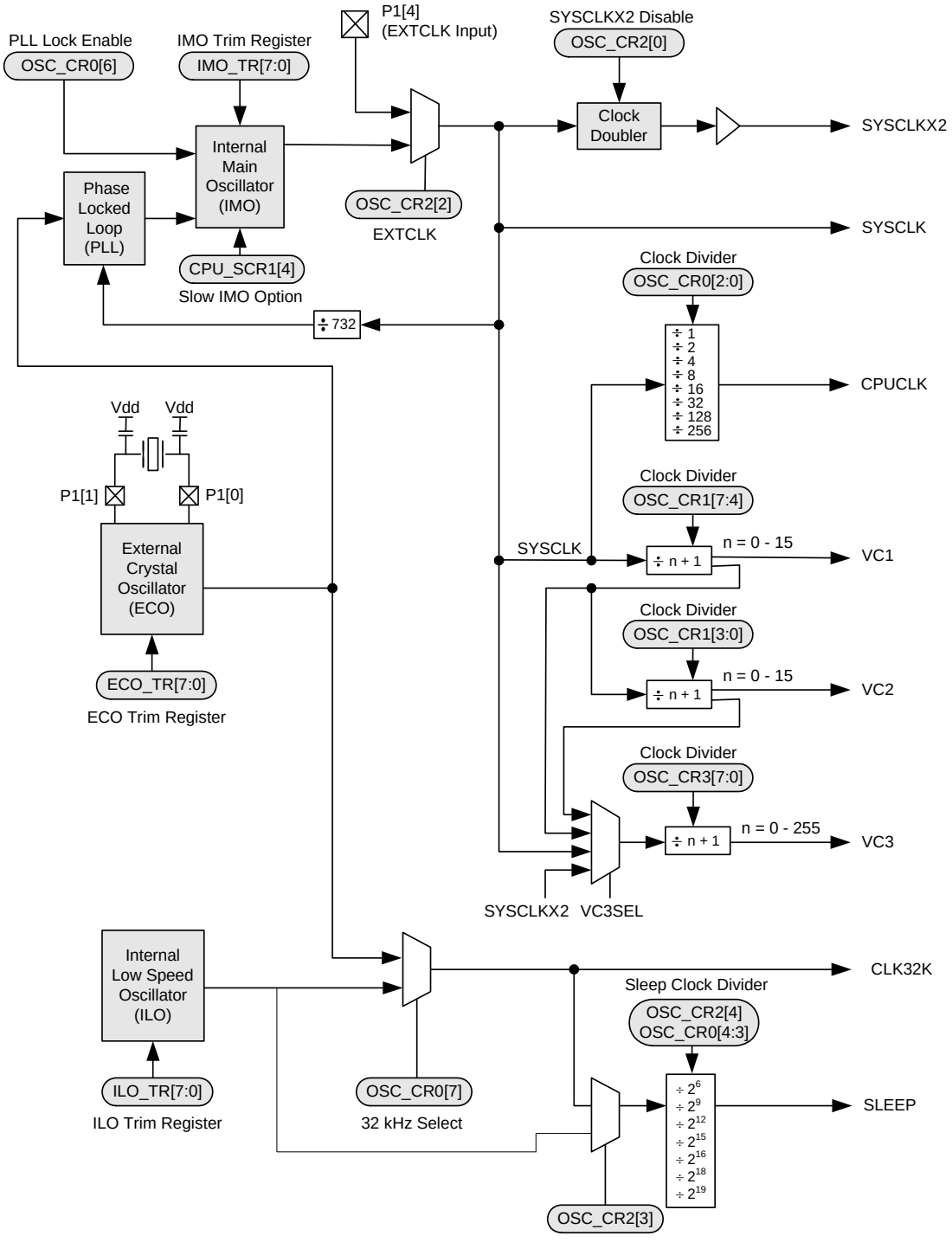

25.1.3 32.768 kHz Crystal Oscillator

The PSoC may be configured to use an external crystal. The crystal oscillator is discussed in detail in the chapter “External Crystal Oscillator (ECO)” on page 87.

25.1.4 External Clock

The ability to replace the 24 MHz internal main oscillator (IMO), as the device master system clock (SYSCLK) with an externally supplied clock, is a feature in the PSoC mixed-signal array (see Figure 25-1).

Pin P1[4] is the input pin for the external clock. This pin was chosen because it is not associated with any special features such as analog I/O, crystal, or In System Serial Programming (ISSP). It is also not physically close to either the P1[0] and P1[1] crystal pins. If P1[4] is selected as the external clock source, the drive mode of the pin must be set to High-Z (not High-Z analog).

The user is able to supply an external clock with a frequency between 1 MHz and 24 MHz. The reset state of the EXTCLKEN bit is ‘0’; and therefore, the device always boots up under the control of the IMO. There is no way to start the system from a reset state with the external clock.

When the EXTCLKEN bit is set, the external clock becomes the source for the internal clock tree, SYSCLK, which drives most PSoC device clocking functions. All external and internal signals, including the 32 kHz clock, whether derived from the internal low speed oscillator (ILO) or the crystal oscillator, are synchronized to this clock source. Note that there is no glitch protection in the device for an external clock. User should ensure that the external clock is glitch-free. See the device datasheet for the clock specifications.

25.1.4.1 Clock Doubler

One of the blocks driven by the system clock is the clock doubler circuit that drives the SYSCLKX2 output. This doubled clock, which is 48 MHz when the IMO is the selected clock (at 24 MHz), may be used as a clock source for the digital PSoC blocks. When the external clock is selected, the SYSCLKX2 signal is still available and serves as a doubler for whatever frequency is input on the external clock pin.

Following the specification for the external clock input ensures that the internal circuitry of the digital PSoC blocks, which is clocked by SYSCLKX2, will meet timing requirements. However, because the doubled clock is generated from both edges of the input clock, clock jitter is introduced if the duty cycle deviates greatly from 50 percent. Also, the high time of the clock out of the doubler is fixed at 21 ns, so the duty cycle of SYSCLKX2 is proportional to the inverse of the frequency, as shown in Figure 25-2. Regardless of the input frequency, the high period of SYSCLKX2 is 21 ns nominal.

Figure 25-2. Operation of the Clock Doubler

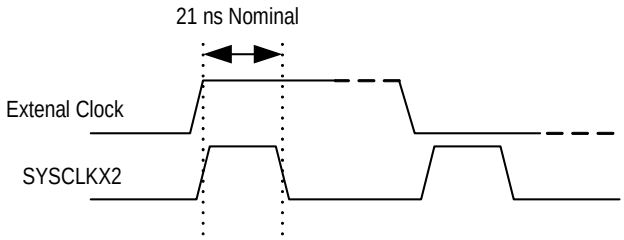

25.1.4.2 Switch Operation

Switching between the IMO and the external clock may be done in firmware at any time and is transparent to the user. Because all PSoC device resources run on clocks derived from or synchronized to SYSCLK, when the switch is made, analog and digital functions may be momentarily interrupted.

Switch timing depends on whether the CPU clock divider is set for divide by 1, or divide by 2 or greater. In the case where the CPU clock divider is set for divide by 2 or greater, as shown in Figure 25-3, the setting of the EXTCLKEN bit occurs shortly after the rising edge of SYSCLK. The SYSCLK output is then disabled after the next falling edge of SYSCLK, but before the next rising edge. This ensures a glitch-free transition and provides a full cycle of setup time from SYSCLK to output disable. When the current clock selection is disabled, the enable of the newly selected clock is double synchronized to that clock. After synchronization, on the subsequent negative edge, SYSCLK is enabled to output the newly selected clock.

In the 24 MHz case, as shown in Figure 25-4, the assertion of IOW_ and thus the setting of the EXTCLKEN bit occurs on the falling edge of SYSCLK. Because SYSCLK is already low, the output is immediately disabled. Therefore, the setup time from SYSCLK to disable is one-half SYSCLK.

Figure 25-3. Switch from IMO to the External Clock with a CPU Clock Divider of Two or Greater

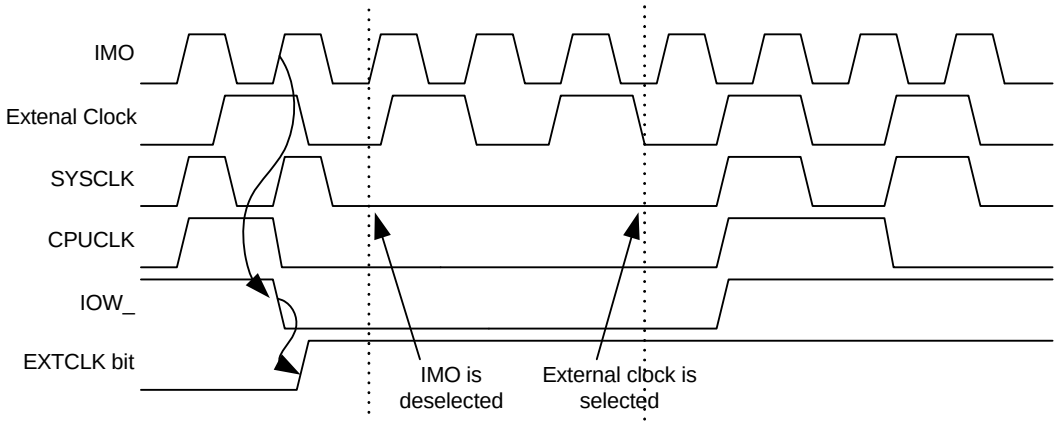

Figure 25-4. Switch from IMO to External Clock with the CPU Running with a CPU Clock Divider of One

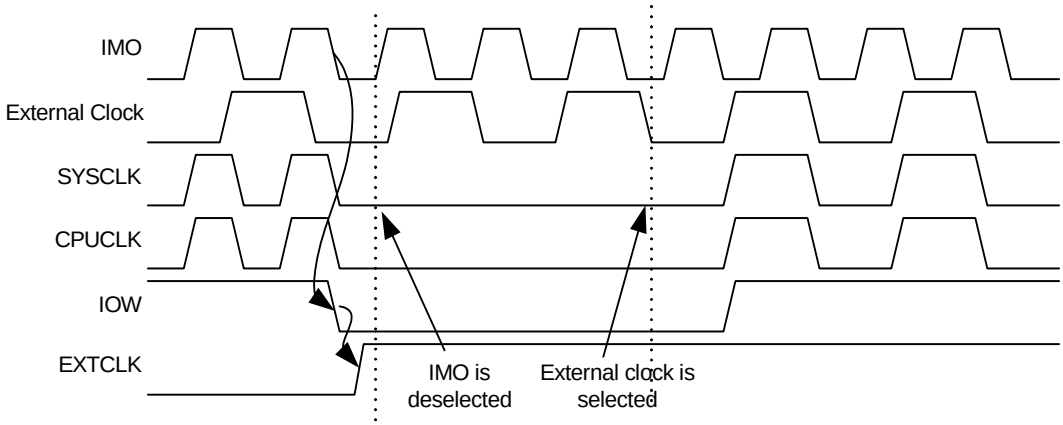

25.2 Register Definitions

The following registers are associated with the Digital Clocks and are listed in address order. Each register description has an associated register table showing the bit structure for that register. For a complete table of digital clock registers, refer to the "Summary Table of the System Resource Registers" on page 462.

Depending on your PSoC device's configuration (refer to the table titled "PSoC Device Characteristics" on page 387), only certain bits are accessible to be read or written, such as the INT_CLR0 and INT_MSK0 registers that are analog column dependent (see the "Cols." column in the tables below). The bits in the tables that are grayed out throughout this manual are reserved bits and are not detailed in the register descriptions that follow. Reserved bits should always be written with a value of '0'.

25.2.1 INT_CLR0 Register

Add.	Name	Cols.	Bit 7	Bit 6	Bit 5	Bit 4	Bit 3	Bit 2	Bit 1	Bit 0	Access
0,DAh	INT_CLR0	4	VC3	Sleep	GPIO	Analog 3	Analog 2	Analog 1	Analog 0	V Monitor	RW : 00
		2	VC3	Sleep	GPIO			Analog 1	Analog 0	V Monitor	RW : 00

The Interrupt Clear Register 0 (INT_CLR0) is used to enable the individual interrupt sources' ability to clear posted interrupts.

Bit 7: VC3. The digital clocks only use bit 7 of the INT_CLR0 register for the VC3 clock. This bit controls the VC3 clock interrupt status.

Bits 6 to 0. The INT_CLR0 register holds bits that are used by several different resources. For a full discussion of the INT_CLR0 register, see the INT_CLRx Registers in the Interrupt Controller chapter on page 65.

For additional information, refer to the INT_CLR0 register on page 199.

25.2.2 INT_MSK0 Register

Add.	Name	Cols.	Bit 7	Bit 6	Bit 5	Bit 4	Bit 3	Bit 2	Bit 1	Bit 0	Access
0,E0h	INT_MSK0	4	VC3	Sleep	GPIO	Analog 3	Analog 2	Analog 1	Analog 0	V Monitor	RW : 00
		2	VC3	Sleep	GPIO			Analog 1	Analog 0	V Monitor	RW : 00

The Interrupt Mask Register 0 (INT_MSK0) is used to enable the individual sources' ability to create pending interrupts.

Bit 7: VC3. The digital clocks only use bit 7 of the INT_CLR0 register for the VC3 clock. This bit controls the VC3 clock interrupt enable.

Bits 6 to 0. The INT_MSK0 register holds bits that are used by several different resources. For a full discussion of the INT_MSK0 register, see the INT_MSKx Registers in the Interrupt Controller chapter on page 65.

For additional information, refer to the INT_MSK0 register on page 208.

25.2.3 OSC_GO_EN Register

Address	Name	Bit 7	Bit 6	Bit 5	Bit 4	Bit 3	Bit 2	Bit 1	Bit 0	Access
1,DDh	OSC_GO_EN	SLPINT	VC3	VC2	VC1	SYSCLKX2	SYSCLK	CLK24M	CLK32K	RW : 00

The Oscillator to Global Outputs Enable Register (OSC_GO_EN) is used to enable tri-state buffers that connect specific system clocks to specific global output even nets.

The OSC_GO_EN register holds eight bits which independently enable a tri-state buffer to drive a clock on to a global net. In all cases, the clock is driven on to one of the nets in the Global Output Even (GOE) bus. In all cases, these bits should only be set and the resulting clock signal on the global be used when the clock frequency is less than or equal to the maximum ***switching*** frequency of the global buses (12 MHz). Therefore, bits 2 and 3 are only useful when the PSoC device is in external clocking mode and bit 1 may never be used.

Bit 7: SLPINT. This bit provides the option to connect the sleep interrupt signal to GOE[7]. This may be useful in real-time clock applications where very low power is required. By driving the sleep interrupt to a global, it may then be routed to a digital PSoC block. The digital PSoC block may then count several sleep interrupts before generating its own interrupt, which is used to bring the PSoC device out of the sleep state.

Bit 6: VC3. This bit enables the driving of the VC3 clock onto GOE[6].

Bit 5: VC2. This bit enables the driving of the VC3 clock onto GOE[5].

Bit 4: VC1. This bit enables the driving of the VC3 clock onto GOE[4].

Bit 3: SYSCLKX2. This bit enables the driving of the SYSCLKX2 clock onto GOE[3].

Bit 2: SYSCLK. This bit enables the driving of the SYSCLK clock onto GOE[2].

Bit 1: CLK24M. This bit enables the driving of the 24 Mhz clock onto GOE[1].

Bit 0: CLK32K. This bit enables the driving of the 32 kHz clock onto GOE[0].

For additional information, refer to the OSC_GO_EN register on page 293.

25.2.4 OSC_CR4 Register

Address	Name	Bit 7	Bit 6	Bit 5	Bit 4	Bit 3	Bit 2	Bit 1	Bit 0	Access
1,DEh	OSC_CR4							VC3 Input Select[1:0]		RW : 00

The Oscillator Control Register 4 (OSC_CR4) selects the input clock to variable clock 3 (VC3).

Bits 1 and 0: VC3 Input Select [1:0]. The VC3 clock net is the only clock net with the ability to generate an interrupt. The input clock of VC3 comes from a configurable source. As shown in Figure 25-1 on page 466, a 4-to-1 mux determines the clock that is used in the input to the VC3 divider. The mux allows either the 48 MHz, 24 MHz, VC1, or VC2 clocks to be used as the input clock to the divider. Because the selection of a clock for the VC3 divider is performed by a simple 4-to-1 mux, ***runt pulses*** and glitches may be injected to the VC3 divider when the OSC_CR4[1:0] bits are changed. Care should be taken to ensure that blocks using the VC3 clock are either disabled when OSC_CR4[1:0] is changed or not sensitive to glitches. Unlike the VC1 and VC2 clock dividers, the VC3 clock divider is 8-bits wide. Therefore, there are 256 valid divider values as indicated by Table 25-3.

It is important to remember that even though the VC3 divider has four choices for the input clock, none of the choices have fixed frequencies for all device configurations. Both the 24 MHz and 48 MHz clocks may have very different frequencies if an external clock is in use. Also, the divider values for the VC1 and VC2 inputs to the mux must be considered.

Table 25-2. OSC_CR4[1:0] Bits: VC3

Bits	Multiplexer Output
00b	SYSCLK
01b	VC1
10b	VC2
11b	SYSCLKX2

For additional information, refer to the OSC_CR4 register on page 294.

25.2.5 OSC_CR3 Register

Address	Name	Bit 7	Bit 6	Bit 5	Bit 4	Bit 3	Bit 2	Bit 1	Bit 0	Access
1,DFh	OSC_CR3	VC3 Divider[7:0]								RW : 00

The Oscillator Control Register 3 (OSC_CR3) selects the divider value for variable clock 3 (VC3).

Bits 7 to 0: VC3 Divider[7:0]. As an example of the flexibility of the clocking structure in PSoC devices, consider a device that is running off of an externally supplied clock at a frequency of 93.7 kHz. This clock value may be divided by the VC1 divider to achieve a VC1 clock net frequency of 5.89 kHz. The VC2 divider can reduce the frequency by another factor of 16, resulting in a VC2 clock net frequency of 366.02 Hz. Finally, the VC3 divider may choose VC2 as its input clock and divide by 256, resulting in a VC3 clock net frequency of 1.43 Hz.

Table 25-3. OSC_CR3[7:0] Bits: VC3 Divider Value

Bits	Divider Source Clock			
	SYSCLKX2	SYSCLK	VC1	VC2
00h	SYSCLKX2	SYSCLK	VC1	VC2
01h	SYSCLKX2 / 2	SYSCLK / 2	VC1 / 2	VC2 / 2
02h	SYSCLKX2 / 3	SYSCLK / 3	VC1 / 3	VC2 / 3
03h	SYSCLKX2 / 4	SYSCLK / 4	VC1 / 4	VC2 / 4
...	...	...	...	...
FCh	SYSCLKX2 / 253	SYSCLK / 253	VC1 / 253	VC2 / 253
FDh	SYSCLKX2 / 254	SYSCLK / 254	VC1 / 254	VC2 / 254
FEh	SYSCLKX2 / 255	SYSCLK / 255	VC1 / 255	VC2 / 255
FFh	SYSCLKX2 / 256	SYSCLK / 256	VC1 / 256	VC2 / 256

The VC3 clock net can generate a system interrupt. After the input clock and the divider value for the VC3 clock are chosen, only one additional step is needed to enable the interrupt; the VC3 mask bit must be set in register INT_MSK0[7]. When the VC3 mask bit is set, the VC3 clock generates pending interrupts every number of clock periods equal to the VC3 divider register value plus one. Therefore, if the VC3 divider register's value is 05h (divide by 6), an interrupt occurs every six periods of the VC3's input clock. Another example is if the divider value was 00h (divide by one), an interrupt is generated on every period of the VC3 clock. The VC3 mask bit only controls the ability of a posted interrupt to become pending. Because there is no enable for the VC3 interrupt, VC3 interrupts will always be posting. See the Interrupt Controller chapter on page 65 for more information on posting and pending.

For additional information, refer to the OSC_CR3 register on page 295.

25.2.6 OSC_CR0 Register

Address	Name	Bit 7	Bit 6	Bit 5	Bit 4	Bit 3	Bit 2	Bit 1	Bit 0	Access
1,E0h	OSC_CR0	32k Select	PLL Mode	No Buzz	Sleep[1:0]		CPU Speed[2:0]			RW : 00

The Oscillator Control Register 0 (OSC_CR0) is used to configure various features of internal clock sources and clock nets.

Bit 7: 32k Select. By default, the 32 kHz clock source is the Internal Low-Speed Oscillator (ILO). Optionally, the 32.768 kHz External Crystal Oscillator (ECO) may be selected.

Bit 6: PLL Mode. This bit is the only bit that directly influences the PLL. When set, it enables the PLL. The EXTCLK bit should be set low during PLL operation.

Bit 5: No Buzz. Normally, when the Sleep bit is set in the CPU_SCR register, all PSoC device systems are powered down, including the bandgap reference. However, to facilitate the detection of POR and LVD events at a rate higher than the sleep interval, the bandgap circuit is powered up periodically (for about 60 µs) at the Sleep System Duty Cycle (set in ECO_TR), which is independent of the sleep interval and typically higher. When the No Buzz bit is set, the Sleep System Duty Cycle value is overridden and the bandgap circuit is forced to be on during sleep. This results in faster response to an LVD or POR event (continuous detection as opposed to periodic), at the expense of slightly higher average sleep current.

Bits 4 and 3: Sleep[1:0]. The available sleep interval selections are shown in Table 25-4. Remember that when the ILO is the selected 32 kHz clock source, sleep intervals are approximate.

Table 25-4. Sleep Interval Selections

OSC_CR2[4]	Sleep Interval OSC_CR0[4:3]	Sleep Timer Clocks	Sleep Period (nominal)	Watchdog Period (nominal)
0	00b (default)	64	1.95 ms	6 ms
0	01b	512	15.6 ms	47 ms
0	10b	4,096	125 ms	375 ms
0	11b	32,768	1 sec	3 sec
1	00b (default)	65,536	2 sec	6 sec
1	01b	131,072	4 sec	12 sec
1	10b	262,144	8 sec	24 sec
1	11b	524,288	16 sec	48 sec

Bits 2 to 0: CPU Speed[2:0]. The PSoC M8C may operate over a range of CPU clock speeds (Table 25-5), allowing the M8C's performance and power requirements to be tailored to the application.

The reset value for the CPU speed bits is zero. Therefore, the default CPU speed is one-eighth of the clock source. The internal main oscillator is the default clock source for the CPU speed circuit; therefore, the default CPU speed is 3 MHz. See "External Clock" on page 467 for more information on the supported frequencies for externally supplied clocks.

The CPU frequency is changed with a write to the OSC_CR0 register. There are eight frequencies generated from a power-of-two divide circuit, which are selected by a 3-bit code. At any given time, the CPU 8-to-1 clock mux is selecting one of the available frequencies, which is resynchronized to the 24 MHz master clock at the output.

Regardless of the CPU speed bit's setting, if the actual CPU speed is greater than 12 MHz, the 24 MHz operating requirements apply. An example of this scenario is a device that is configured to use an external clock, which is supplying a frequency of 20 MHz. If the CPU speed register's value is 0x03, the CPU clock is 20 MHz. Therefore, the supply voltage requirements for the device are the same as if the part was operating at 24 MHz off of the internal main oscillator. The operating voltage requirements are not relaxed until the CPU speed is at 12.0 MHz or less.

Some devices support the slow IMO option, as discussed in the IMO chapter in the "Architectural Description" on page 81. This offers an option to lower both system and CPU clock speed to save power.

Table 25-5. OSC_CR0[2:0] Bits: CPU Speed

Bits	6 MHz Internal Main Oscillator *	24 MHz Internal Main Oscillator	External Clock
000b	750 kHz	3 MHz	EXTCLK/ 8
001b	1.5 MHz	6 MHz	EXTCLK/ 4
010b	3 MHz	12 MHz	EXTCLK/ 2
011b	6 MHz	24 MHz	EXTCLK/ 1
100b	375 kHz	1.5 MHz	EXTCLK/ 16
101b	187.5 kHz	750 kHz	EXTCLK/ 32
110b	93.7 kHz	187.5 kHz	EXTCLK/ 128
111b	23.4 kHz	93.7 kHz	EXTCLK/ 256

* For PSoC devices that support the slow IMO option, see the "Architectural Description" on page 81.

An automatic protection mechanism is available for systems that need to run at peak CPU clock speed but cannot guarantee a high enough supply voltage for that clock speed. See the LVDTBEN bit in the "VLT_CR Register" on page 523 for more information.

For additional information, refer to the OSC_CR0 register on page 296.

25.2.7 OSC_CR1 Register

Address	Name	Bit 7	Bit 6	Bit 5	Bit 4	Bit 3	Bit 2	Bit 1	Bit 0	Access
1,E1h	OSC_CR1	VC1 Divider[3:0]				VC2 Divider[3:0]				RW : 00

The Oscillator Control Register 1 (OSC_CR1) selects the divider value for variable clocks 1 and 2 (VC1 and VC2).

Bits 7 to 4: VC1 Divider[3:0]. The VC1 clock net is one of the variable clock nets available in the PSoC M8C. The source for the VC1 clock net is a simple 4-bit divider. The source for the divider is the 24 MHz system clock; however, if the device is configured to use an external clock, the input to the divider is the external clock. Therefore, the VC1 clock net is not always the result of dividing down a 24 MHz clock. The 4-bit divider that controls the VC1 clock net may be configured to divide, using any integer value between 1 and 16. Table 25-6 lists all values for the VC1 clock net.

Bits 3 to 0: VC2 Divider[3:0]. The VC2 clock net is one of the variable clock nets available in the PSoC M8C. The source for the VC2 clock net is a simple 4-bit divider. The source for the divider is the VC1 clock net. The 4-bit divider that controls the VC2 clock net may be configured to divide, using any integer value between 1 and 16. Table 25-7 lists all values for the VC2 clock net.

Table 25-6. OSC_CR1[7:4] Bits: VC1 Divider Value

Bits	Divider Source Clock	
	Internal Main Oscillator at 24 MHz	External Clock
0000b	24 MHz	EXTCLK / 1
0001b	12 MHz	EXTCLK / 2
0010b	8 MHz	EXTCLK / 3
0011b	6 MHz	EXTCLK / 4
0100b	4.8 MHz	EXTCLK / 5
0101b	4 MHz	EXTCLK / 6
0110b	3.43 MHz	EXTCLK / 7
0111b	3 MHz	EXTCLK / 8
1000b	2.67 MHz	EXTCLK / 9
1001b	2.40 MHz	EXTCLK / 10
1010b	2.18 MHz	EXTCLK / 11
1011b	2.00 MHz	EXTCLK / 12
1100b	1.85 MHz	EXTCLK / 13
1101b	1.71 MHz	EXTCLK / 14
1110b	1.6 MHz	EXTCLK / 15
1111b	1.5 MHz	EXTCLK / 16

Table 25-7. OSC_CR1[3:0] Bits: VC2 Divider Value

Bits	Divider Source Clock	
	Internal Main Oscillator	External Clock
0000b	(24 / (OSC_CR1[7:4]+1)) / 1	(EXTCLK / (OSC_CR1[7:4]+1)) / 1
0001b	(24 / (OSC_CR1[7:4]+1)) / 2	(EXTCLK / (OSC_CR1[7:4]+1)) / 2
0010b	(24 / (OSC_CR1[7:4]+1)) / 3	(EXTCLK / (OSC_CR1[7:4]+1)) / 3
0011b	(24 / (OSC_CR1[7:4]+1)) / 4	(EXTCLK / (OSC_CR1[7:4]+1)) / 4
0100b	(24 / (OSC_CR1[7:4]+1)) / 5	(EXTCLK / (OSC_CR1[7:4]+1)) / 5
0101b	(24 / (OSC_CR1[7:4]+1)) / 6	(EXTCLK / (OSC_CR1[7:4]+1)) / 6
0110b	(24 / (OSC_CR1[7:4]+1)) / 7	(EXTCLK / (OSC_CR1[7:4]+1)) / 7
0111b	(24 / (OSC_CR1[7:4]+1)) / 8	(EXTCLK / (OSC_CR1[7:4]+1)) / 8
1000b	(24 / (OSC_CR1[7:4]+1)) / 9	(EXTCLK / (OSC_CR1[7:4]+1)) / 9
1001b	(24 / (OSC_CR1[7:4]+1)) / 10	(EXTCLK / (OSC_CR1[7:4]+1)) / 10
1010b	(24 / (OSC_CR1[7:4]+1)) / 11	(EXTCLK / (OSC_CR1[7:4]+1)) / 11
1011b	(24 / (OSC_CR1[7:4]+1)) / 12	(EXTCLK / (OSC_CR1[7:4]+1)) / 12
1100b	(24 / (OSC_CR1[7:4]+1)) / 13	(EXTCLK / (OSC_CR1[7:4]+1)) / 13
1101b	(24 / (OSC_CR1[7:4]+1)) / 14	(EXTCLK / (OSC_CR1[7:4]+1)) / 14
1110b	(24 / (OSC_CR1[7:4]+1)) / 15	(EXTCLK / (OSC_CR1[7:4]+1)) / 15
1111b	(24 / (OSC_CR1[7:4]+1)) / 16	(EXTCLK / (OSC_CR1[7:4]+1)) / 16

For additional information, refer to the OSC_CR1 register on page 297.

25.2.8 OSC_CR2 Register

Address	Name	Bit 7	Bit 6	Bit 5	Bit 4	Bit 3	Bit 2	Bit 1	Bit 0	Access
1,E2h	OSC_CR2	PLLGAIN			SLP_EXTEND	WDR32_SE	EXTCLKEN	RSVD	SYSCLKX2DIS	RW : 00

The Oscillator Control Register 2 (OSC_CR2) is used to configure various features of internal clock sources and clock nets.

Bit 7: PLLGAIN. This is the only bit in the OSC_CR2 register that directly influences the PLL. When set, this bit keeps the PLL in a Low Gain mode. If this bit is held low, the lock time is less than 10 ms. If this bit is held high, the lock time is on the order of 50 ms. After lock is achieved, it is recommended that this bit be forced high to decrease the jitter on the output. If longer lock time is tolerable, the PLLGAIN bit can be held high all the time.

Bit 4: SLP_EXTEND. This bit allows for extended sleep intervals, up to 16s.

Bit 3: WDR32_SE. If an external 32 kHz crystal is used, this bit allows a choice between the ECO or the ILO as the source of the watchdog timer and sleep timer

Bit 2: EXTCLKEN. When the EXTCLKEN bit is set, the external clock becomes the source for the internal clock tree, SYSCLK, which drives most PSoC device clocking functions. All external and internal signals, including the 32 kHz clock, whether derived from the internal low speed oscillator (ILO) or the crystal oscillator, are synchronized to this clock source. If an external clock is enabled, PLL mode should be off. The external clock input is located on port P1[4]. When using this input, the pin drive mode should be set to High-Z (not High-Z analog).

Bit 1: RSVD. Reserved bit - This bit should always be 0.

Bit 0: SYSCLKX2DIS. When set, the Internal Main Oscillator's doubler is disabled. This results in a reduction of overall device power, on the order of 1 mA. It is advised that any application that does not require this doubled clock should have it turned off.

For additional information, refer to the OSC_CR2 register on page 298.

26. Multiply Accumulate (MAC)

This chapter presents the Multiply Accumulate (MAC) and its associated registers. The MAC block is a fast 8-bit multiplier or a fast 8-bit multiplier with 32-bit accumulate. For a complete table of the MAC registers, refer to the "Summary Table of the System Resource Registers" on page 462. For a quick reference of all PSoC® registers in address order, refer to the Register Details chapter on page 125.

26.1 Architectural Description

The MAC is a register-based system resource. Its only interface is the system bus; therefore, there are no special clocks or enables that are required to be sourced from digital or analog PSoC blocks. All CY28xxx devices have two MAC blocks. Each MAC is completely independent of the other.

The architectural presentation of the MAC is illustrated in Figure 26-1.

Figure 26-1. MAC Block Diagram

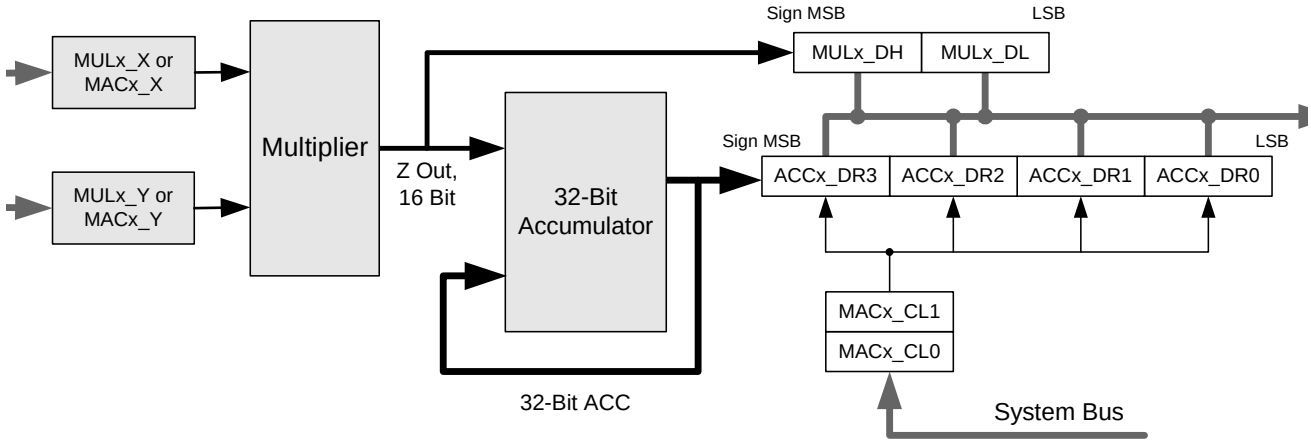

26.2 Application Description

26.2.1 Multiplication with No Accumulation

For simple multiplication, the MAC block accepts two 8-bit signed numbers as the multiplicands for a multiply operation. The product of the multiplication is stored in a 16-bit signed form. Up to four registers are involved with simple multiplication: MULx_X, MULx_Y, MULx_DH, and MULx_DL.

To execute a multiply, simply write a value to either the MULx_X or MULx_Y registers. Immediately after the write of the multiplicand, the product is available at registers MULx_DH and MULx_DL. After reset of the part at power up or after an external reset, the MAC registers will not be reset to zero. Therefore, after the write of the first multiplicand, the product is indeterminate. After the write of the second multiplicand, the product registers are updated with the product of the first and second multiplicands (assuming one of the writes was to MULx_X and the other was to MULx_Y). Multiplication is associative so the order in which you write to X and Y does not matter.

26.2.2 Accumulation After Multiplication

Accumulation of products is a feature that is implemented on top of simple multiplication. When using the MAC to accumulate the products of successive multiplications, two 8-bit signed values are used for input. The product of the multiplication is accumulated as a 32-bit signed value.

The user has the choice to either cause a multiply/accumulate function to take place or a multiply only function. The user selects which operation is performed by choosing of input register. The multiply function occurs immediately whenever the MULx_X or the MULx_Y multiplier input registers are written, and the result is available in the MULx_DH and MULx_DL multiplier result registers, as discussed in the 26.2.1 Multiplication with No Accumulation section. The multiply/accumulate function is executed whenever there is a write to the MACx_X or the MACx_Y multiply/accumulate input registers; the result is available in the ACCx_DR3, ACCx_DR2, ACCx_DR1, and ACCx_DR0 accumulator result registers. A write to the MULx_X or MACx_X registers is input as the X value to both the multiply and multiply/accumulate functions. A write to the MULx_Y or MACx_Y registers is input as the Y value to both the multiply and multiply/accumulate functions. A write to the MACx_CL0 or MACx_CL1 registers will clear the value in the four accumulate registers.

To clear the accumulated products, simply write to either of the MACx_CLx registers.

26.3 Register Definitions

In PSoC devices with more than one MAC block, such as the CY8C28xxx family of devices, there will be one of the following registers for each block. The registers in this section are listed in address order.

The following registers are associated with the MAC PSoC Blocks. Each register description has an associated register table showing the bit structure for that register. The ‘X’ in the Access column of some register tables signify that the value after power on reset is unknown. For a complete table of the MAC registers, refer to the “Summary Table of the System Resource Registers” on page 462.

26.3.1 MULx_X Register

Add.	Name	Bit 7	Bit 6	Bit 5	Bit 4	Bit 3	Bit 2	Bit 1	Bit 0	Access
0,E8h	MUL0_X	Data[7:0]								W : XX

LEGEND
X The value after power on reset is unknown.

The Multiply Input X Register (MULx_X) is one of two multiplicand registers for the signed 8-bit multiplier in the PSoC MAC.

Bits 7 to 0: Data[7:0]. The multiply X (MULx_X) register is one of two multiplicand registers for the signed 8-bit multiplier in the PSoC MAC. When these write only registers are written, the product of the written value and the current value of the MULx_X registers are calculated.

For additional information, refer to the MULx_X register on page 171.

26.3.2 MULx_Y Register

Add.	Name	Bit 7	Bit 6	Bit 5	Bit 4	Bit 3	Bit 2	Bit 1	Bit 0	Access
0,E9h	MUL0_Y	Data[7:0]								W : XX

LEGEND
X The value after power on reset is unknown.

The Multiply Input Y Register (MULx_Y) is one of two multiplicand registers for the signed 8-bit multiplier in the PSoC MAC.

Bits 7 to 0: Data[7:0]. The multiply Y (MULx_Y) register is one of two multiplicand registers for the signed 8-bit multiplier in the PSoC MAC. When these write only registers are written, the product of the written value and the current value of the MULx_Y registers are calculated.

For additional information, refer to the MULx_Y register on page 172.

26.3.3 MULx_DH Register

Add.	Name	Bit 7	Bit 6	Bit 5	Bit 4	Bit 3	Bit 2	Bit 1	Bit 0	Access
0,EAh	MUL0_DH	Data[7:0]								R : XX

LEGEND
X The value after power on reset is unknown.

The Multiply Result High Byte Register (MULx_DH) holds the most significant byte of the 16-bit product.

Bits 7 to 0: Data[7:0]. The product of the multiply operation on the MULx_X and MULx_Y registers is stored as a signed 16-bit value. The read only multiply data high (MUL0_DH and MUL1_DH) registers hold the most significant byte of the 16-bit product.

For additional information, refer to the MULx_DH register on page 173.

26.3.4 MULx_DL Register

Add.	Name	Bit 7	Bit 6	Bit 5	Bit 4	Bit 3	Bit 2	Bit 1	Bit 0	Access
0,EBh	MUL0_DL	Data[7:0]								R : XX

LEGEND
X The value after power on reset is unknown.

The Multiply Result Low Byte Register (MULx_DL) holds the least significant byte of the 16-bit product.

Bits 7 to 0: Data[7:0]. The product of the multiply operation on the MULx_X and MULx_Y registers is stored as a signed 16-bit value. The read only multiply data low (MUL0_DL and MUL1_DL)) registers hold the least significant byte of the 16-bit product.

For additional information, refer to the MULx_DL register on page 174.

26.3.5 MACx_X/ACCx_DR1 Register

Add.	Name	Bit 7	Bit 6	Bit 5	Bit 4	Bit 3	Bit 2	Bit 1	Bit 0	Access
0,ECh	MAC0_X/ ACC0_DR1	Data[7:0]								RW : 00

The Accumulator Data Register 1 (MACx_X/ACCx_DR1) is the multiply accumulate X register and the second byte of the accumulated value.

Bits 7 to 0: Data[7:0]. This register performs two distinct functions; therefore, two names are used to refer to the same address. When the address is written, a multiply operation with accumulation is performed. The multiply accumulate X (MACx_X) register is one of the two multiplicand registers for the signed 8-bit multiply with accumulate operation. When this register is written, the product of the written value and the current value of the MACx_Y register is calculated, then that product is added to the 32-bit accumulators value. When this address is read, the accumulator's data register 1 is read. This register holds the second of four bytes used to hold the accumulator's value. This byte is the most significant of the lower 16 bits of the accumulator's value.

For additional information, refer to the MACx_X/ACCx_DR1 register on page 175.

26.3.6 MACx_Y/ACCx_DR0 Register

Add.	Name	Bit 7	Bit 6	Bit 5	Bit 4	Bit 3	Bit 2	Bit 1	Bit 0	Access
0,EDh	MAC0_Y/ ACC0_DR0	Data[7:0]								RW : 00

The Accumulator Data Register 0 (MACx_Y/ACCx_DR0) is the multiply accumulate Y register and the first byte of the accumulated value.

Bits 7 to 0: Data[7:0]. This register performs two distinct functions; therefore, two names are used to refer to the same address. When the address is written, a multiply operation with accumulation is performed. The multiply accumulate Y (MACx_Y) register is one of the two multiplicand registers for the signed 8-bit multiply with accumulate operation. When this register is written, the product of the written value and the current value of the MACx_X register is calculated, then that product is added to the 32-bit accumulators value. When this address is read, the accumulator's data register 0 is read. This register holds the least significant of four bytes used to hold the accumulator's value.

For additional information, refer to the MACx_Y/ACCx_DR0 register on page 176.

26.3.7 MACx_CL0/ACCx_DR3 Register

Add.	Name	Bit 7	Bit 6	Bit 5	Bit 4	Bit 3	Bit 2	Bit 1	Bit 0	Access
0,EEh	MAC0_CL0/ ACC0_DR3	Data[7:0]								RW : 00

The Accumulator Data Register 3 (MACx_CL0/ACCx_DR3) is an accumulator clear register and the fourth byte of the accumulated value.

Bits 7 to 0: Data[7:0]. This register performs two distinct functions; therefore, two names are used to refer to the same address. When the address is written with any value, all 32-bits of the accumulator are reset to zero. When this address is read, the accumulator's data register 3 is read. This register holds the most significant of four bytes used to hold the accumulator's value.

For additional information, refer to the MACx_CL0/ ACCx_DR3 register on page 177.

26.3.8 MACx_CL1/ACCx_DR2 Register

Add.	Name	Bit 7	Bit 6	Bit 5	Bit 4	Bit 3	Bit 2	Bit 1	Bit 0	Access
0,EFh	MAC0_CL1/ ACC0_DR2	Data[7:0]								RW : 00

The Accumulator Data Register 2 (MACx_CL1/ACCx_DR2) is an accumulator clear register and the third byte of the accumulated value.

Bits 7 to 0: Data[7:0]. This register performs two distinct functions; therefore, two names are used to refer to the same address. When the address is written with any value, all 32 bits of the accumulator are reset to zero. When this address is read, the accumulator's data register 2 is read. This register holds the third of four bytes used to hold the accumulator's value. This byte is the least significant of the upper 16 bits of the accumulator's value.

For additional information, refer to the MACx_CL1/ ACCx_DR2 register on page 178.

27. Decimator

This chapter explains the PSoC® Type 2 Decimator blocks, and their associated registers. The decimator blocks are a hardware assist for digital signal processing applications. The decimator may be used for delta-sigma analog to digital converters and incremental analog to digital converters. For a complete table of the decimator registers, refer to the "Summary Table of the System Resource Registers" on page 462. For a quick reference of all PSoC registers in address order, refer to the Register Details chapter on page 125.

27.1 Architectural Description

Depending on the PSoC device, there is a varying number of decimators available (see Table 27-1).

Table 27-1. Decimator Availability for CY8C28xxx PSoC Device Groups

PSoC Part Number	Type 2 Decimator Block
CY8C28x03	0
CY8C28x13	2
CY8C28x23	2
CY8C28x33	4
CY8C28x43	4
CY8C28x45	4
CY8C28x52	4

27.1.1 Type 2 Decimator Block

The type 2 decimator block is the type used for all of the CY8C28xxx device groups except the CY8C28x03, which has no decimators. The type 2 block is a full hardware version of a Sinc2 filter. Integration and resampling/differentiation is accomplished in this block. Depending on the operating mode, little or no processing is required on the final output. This greatly reduces the CPU overhead requirement for analog-to-digital conversion functionality.

The major functional units within the type 2 decimator block are shown in Figure 27-1.

Figure 27-1. Type 2 Decimator Architecture

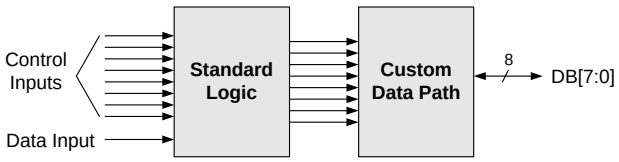

The type 2 decimator block may be divided into two major functional units: A logic block composed of standard cells and a custom data path block. The architecture of the custom data path block is shown in Figure 27-2. The essential function of the custom block is not just to integrate the single bit data stream over a specific time period, but also to resample/differentiate it to obtain the filtered data. Thus, the type 2 decimator block does not depend on external firmware code to perform the decimation process. It does the entire Sinc2 filtering on its own. The type 2 custom data path block implements the 17-bit math, as described in Figure 27-2.

Figure 27-2. Type 2 Decimator Custom Data Path

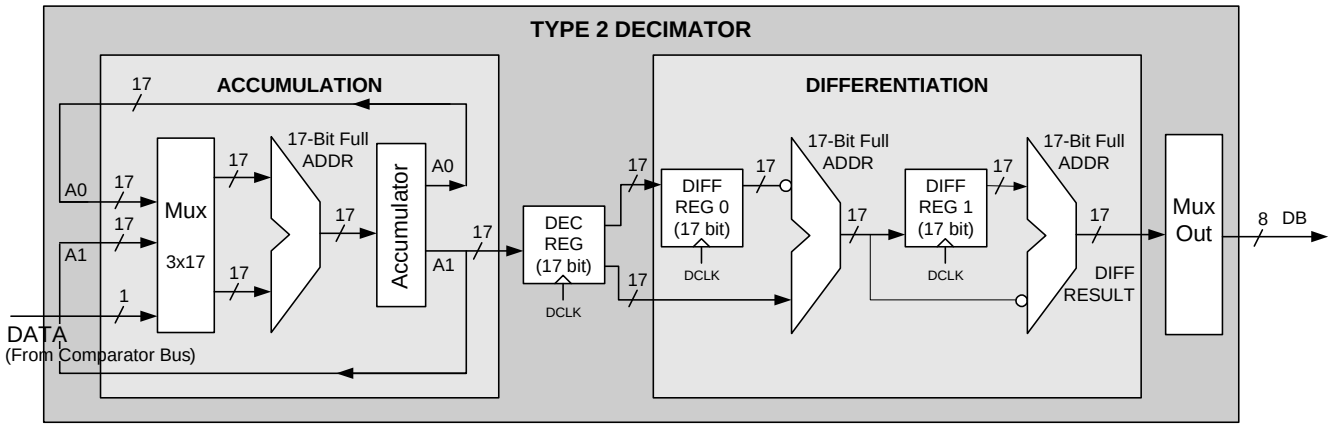

The principle of operation of a Sinc^2 decimation filter can be inferred from Figure 27-3 and Equation 1. The decimator's custom data path follows the Accumulation stage of Figure 27-2, in principle.

Figure 27-3. Sinc^2 Filter Block Diagram

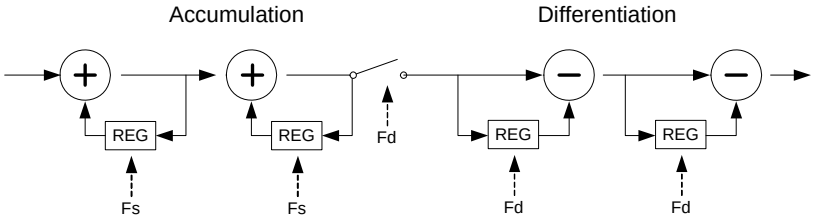

H(z) = Transfer function of Sinc^N filter with a decimation rate of M

$$H(z) = (1/M)^N (1\text{-}Z^{-M})^N (1/ (1\text{-}Z^{-1}))^N$$

Sinc^2 Transfer Function **Equation 1**

27.1.1.1 Dedicated Data/Clock Input Selections for Single Decimator Row

Each decimator accepts eight data input sources and eight clock input sources.

Figure 27-4. Data/Clock Input Sources

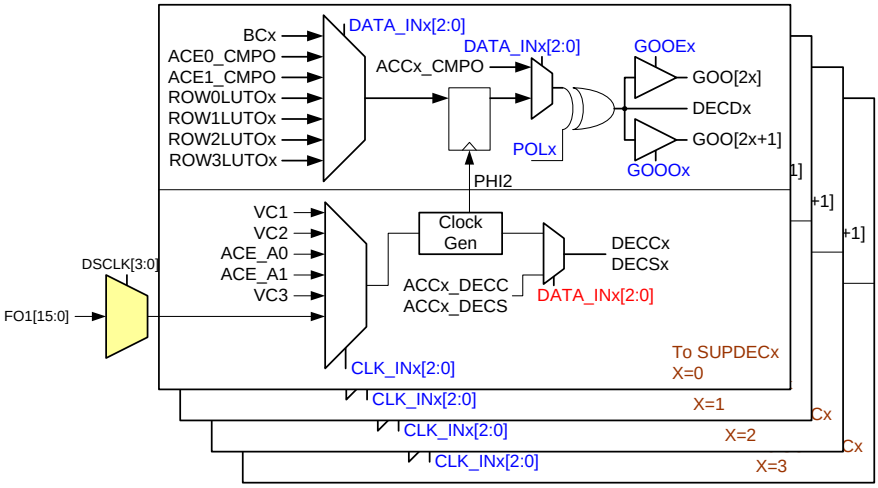

The data input is controlled by DATA_INx[2:0], as shown in Table 27-2.

Table 27-2. Data Input

DATA_INx[2:0]	Data Source	Data_INx[2:0]	Data Source
000b	ACCx_CMPO	100b	ROW0LUTx
001b	BCROWx	101b	ROW1LUTx
010b	ACE0_CMPO	110b	ROW2LUTx
011b	ACE1_CMPO	111b	ROW3LUTx

Except for ACCx_CMPO, all other data inputs are registered first by a PHI2 clock. The final MUX output is inverted, controlled by POLx bit, and finally goes to the decimator's data input DECD. The DECD can also go to GO bus if the signal goes out of chip to switch on/off an external resistor in a CapSense application.

Refer to the DECx_CR0 Register.

Table 27-3 shows how the DECDx goes to GOO bus.

Table 27-3. Decimator Row to GOO Bus

Decimator Row #(x=)	GOOEx = 1	GOOOx = 1
0	GOO[0]	GOO[1]
1	GOO[2]	GOO[3]
2	GOO[4]	GOO[5]
3	GOO[6]	GOO[7]

The control bits in DEC_CR3 Register define the decimator clock selections.

The clocks are generated as shown in Figure 27-5. Note that there is an exception on clock generation: When ACCx_CMPO is the data input, the decimator's clocks are directly derived from the ACCx block; that is, the clock generator is bypassed. The final clocks are all zeros when the DECx_EN is zero, regardless of the clock source setting. The generator is reset when CLK_INx[2:0] or DSCLK[3:0] or the configure bits of ACE_CLKA0 and ACE_CLKA1 are written; that is, the writing action synchronizes the generated clocks.

Note The input clock to the decimator must be less than 24 MHz.The decimator will not function properly at 24M Hz.

Figure 27-5. Decimator Clock Generation

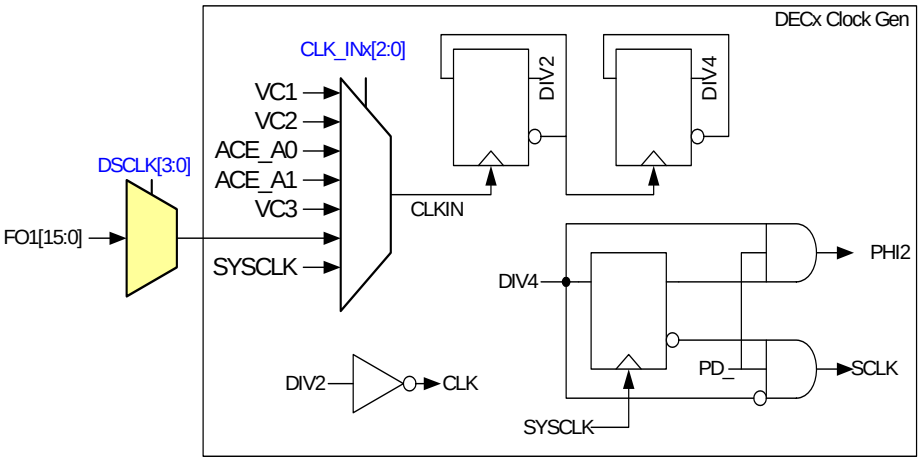

Table 27-4 shows how the clock is selected.

Table 27-4. Clock Selection

CLK_INx[2:0]	CLKIN	CLK_INx[2:0]	CLKIN
000b	VC1	100b	VC3
001b	VC2	101b	Preselected digital block output
010b	ACE_CLKA0	110b	SYSCLK
011b	ACE_CLKA1	111b	Reserved

A preselected FO (digital row primary output) is shared between all decimator rows. The DSCLK[3:0] in DEC_CR5 indicates which FO is selected.

27.1.1.2 Single External Decimation Clock Supports Four Decimators

The configuration bits of DCLKS[3:0] in the DEC_CR0 and DEC_CR1 registers select 1 out of 12 digital block outputs to generate decimation clock DCLK as shown in Figure 27-6. This setting is ignored when the Decimation Rate is set in DECx_CR.

Figure 27-6.

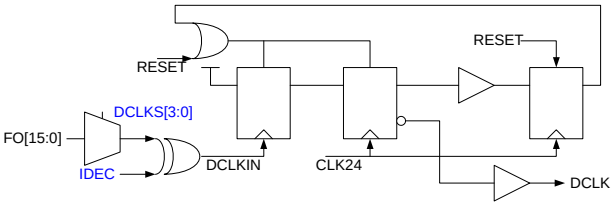

27.1.1.3 Single Incremental Gating Clock Supports Six Analog Compare Outputs

The bits of ICLKS[3:0] in DEC_CR0 and DEC_CR1 select 1 out of 16 digital block outputs to form gating signal. The gating signal, as well as 6 incremental gating enable signals, is sent to each ACC column and ACE column to gate the analog columns' compare output, as shown in Figure 27-7.

Figure 27-7.

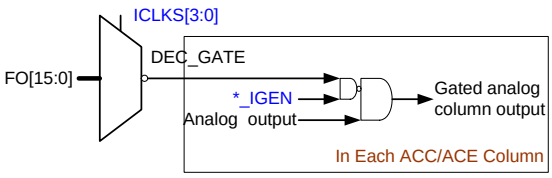

Note that to remain compatible with old PSoC1 chips, the gating circuit is before the LUT in ACC column and is after LUT in ACE column.

Refer to the DEC_CR0 Register and the DEC_CR1 Register.

Note also that the ICLKS and DCLKS selections are compatible with the CY8C25/26xxx PSoC devices.

Table 27-5. Digital Block Output Selection

D/ICLKS	Selection	D/ICLKS	Selection	D/ICLKS	Selection	D/ICLKS	Selection
0000b	DB02(FO2)	0100b	DB00(FO0)	1000b	DB22(FO10)	1100b	DB20(FO8)
0001b	DB12(FO6)	0101b	DB10(FO4)	1001b	DB32(FO14)	1101b	DB30(FO12)
0010b	DB01(FO1)	0110b	DB03(FO3)	1010b	DB21(FO9)	1110b	DB23(FO11)
0011b	DB11(FO5)	0111b	DB13(FO7)	1011b	DB31(FO13)	1111b	DB33(FO15)

27.1.1.4 ACC/ACE Interrupts Replacement

Each decimator can generate an interrupt in internal timer mode. However, no extra interrupt for the potential four decimator interrupts exists. The decimators' interrupts should be mapped to existing ACC or ACE interrupts. Table 27-6 is a mapping table.

Table 27-6. Decimator Interrupt Mapping

Result	Condition
Map to ACCx interrupt	The data input is not from ACE0 or ACE1, and the decimator is enabled and is in internal timer mode.
Map to ACE0 interrupt	The data is from ACE0, and the decimator is enabled and is in internal timer mode.
Map to ACE1 interrupt	The data is from ACE1, and the decimator is enabled and is in internal timer mode.

27.2 Register Definitions

The following registers are associated with the Decimator and are listed in address order. Each register description has an associated register table showing the bit structure for that register. The bits that are grayed out in the tables are reserved bits and are not detailed in the register description that follows. Reserved bits should always be written with a value of '0'.

27.2.1 DECx_DH Register

Address	Name	Bit 7	Bit 6	Bit 5	Bit 4	Bit 3	Bit 2	Bit 1	Bit 0	Access
0,A0h	DEC0_DH	Data High Byte[7:0]								RC : XX
0,A2h	DEC1_DH	Data High Byte[7:0]								RC : XX
0,A4h	DEC2_DH	Data High Byte[7:0]								RC : XX
0,A6h	DEC3_DH	Data High Byte[7:0]								RC : XX

LEGEND
C: Clearable register or bits. X: The value for power after reset is unknown.

The Decimator Data High registers (DEC0_DH, DEC1_DH, DEC2_DH, and DEC3_DH) are dual purpose registers and are used to read the high byte of the decimator's output or clear the decimator.

Bits 7 to 0: Data High Byte[7:0]. When the registers are read, the most significant byte of the 16-bit decimator value is returned. Depending on how the decimator is configured, this value is either the result of the second integration, second differentiation, or the high byte of the 16-bit counter.

The second function of the DECx_DH registers is activated whenever the registers are written: That function is to clear the decimator value. When the DECx_DH registers are written, the decimator's value will be cleared regardless of the value written. Either the DECx_DH or DECx_DL registers may be written to clear the decimator's value. Note that the registers do not reset to 00h. The DECx_DH register resets to an indeterminate value.

For additional information, refer to the DECx_DH register on page 169.

27.2.2 DECx_DL Register

Address	Name	Bit 7	Bit 6	Bit 5	Bit 4	Bit 3	Bit 2	Bit 1	Bit 0	Access
0,A1h	DEC0_DL	Data Low Byte[7:0]								RC : XX
0,A3h	DEC1_DL	Data Low Byte[7:0]								RC : XX
0,A5h	DEC2_DL	Data Low Byte[7:0]								RC : XX
0,A7h	DEC3_DL	Data Low Byte[7:0]								RC : XX

LEGEND
C: Clearable register or bits. X: The value for power after reset is unknown.

The Decimator Data Low registers (DEC0_DL, DEC1_DL, DEC2_DL, and DEC3_DL) are dual purpose registers and are used to read the low byte of the decimator's output or clear the decimator.

Bits 7 to 0: Data Low Byte[7:0]. When the registers are read, the least significant byte of the 16-bit decimator value is returned. Depending on how the decimator is configured, this value is either the result of the second integration, second differentiation, or the high byte of the 16-bit counter.

The second function of the DECx_DL registers is activated whenever the registers are written: That function is to clear the decimator value. When the DECx_DL registers are written, the decimator's value will be cleared regardless of the value written. Either the DECx_DH or DECx_DL registers may be written to clear the decimator's value. Note that the registers do not reset to 00h. The DECx_DL register resets to an indeterminate value.

For additional information, refer to the DECx_DL register on page 170.

27.2.3 DEC_CR0 Register

Add.	Name	Cols.	Bit 7	Bit 6	Bit 5	Bit 4	Bit 3	Bit 2	Bit 1	Bit 0	Access
0,E6h	DEC_CR0	4, 2	ACC_IGEN[3:0]				ICLKS[0]	ACE_IGEN[1:0]		DCLKS0	RW : 00

The Decimator Control Register 0 (DEC_CR0) contains control bits to access hardware support for both the Incremental ADC and the DELISG ADC.

This register can only be used with four and two analog column PSoC devices.

Bits 7 to 4: ACC_IGEN[3:0]. For incremental support, these bits select which column comparator bit will be gated by the output of a digital block. The output of that digital block is typically a PWM signal; the high time of which corresponds to the ADC conversion period. This ensures that the comparator output is only processed for the precise conversion time. The digital block selected for the gating function is controlled by ICLKS0 in this register, and ICLKS3, ICLKS2 and ICLKS1 bits in the DEC_CR1 register.

Bit 3: ICLKS0. In conjunction with ICLKS1, ICLKS2, and ICLKS3 in the DEC_CR1 register, these bits select up to one of 12 digital blocks (depending on the PSoC device resources) to provide the gating signal for an incremental ADC conversion.

Bits 2 and 1: ACE_IGEN[1:0]. For incremental support, these bits select which type E column comparator bit will be gated by the output of a digital block. The output of that digital block is typically a PWM signal, the high time of which corresponds to the ADC conversion period. This ensures that the comparator output is only processed for the precise conversion time. The digital block selected for the gating function is controlled by ICLKS[3:0]

Bit 0: DCLKS0. The decimator requires a timer signal to sample the current decimator value to an output register that may subsequently be read by the CPU. This timer period is set to be a function of the DELSIG conversion time and may be selected from up to one of twelve digital blocks (depending on the PSoC device resources) with DCLKS0 in this register and DCLKS3, DCLKS2, and DCLKS1 in the DEC_CR1 register. If the Decimation Rate bits are set in DECx_CR this setting is overwritten

For additional information, refer to the DEC_CR0 register on page 212.

27.2.4 DEC_CR1 Register

Address	Name	Cols.	Bit 7	Bit 6	Bit 5	Bit 4	Bit 3	Bit 2	Bit 1	Bit 0	Access
0,E7h	DEC_CR1	4		IDEC	ICLKS3	ICLKS2	ICLKS1	DCLKS3	DCLKS2	DCLKS1	RW : 00
		2		IDEC	ICLKS3	ICLKS2	ICLKS1	DCLKS3	DCLKS2	DCLKS1	RW : 00

The Decimator Control Register 1 (DEC_CR1) is used to configure the decimator prior to using it.

This register can only be used with four and two analog column PSoC devices.

Depending on how many analog columns your PSoC device has (see the Cols. column in the register table above), only certain bits are accessible to be read or written.

Bit 6: IDEC. If the internal Timer set in DECx_CR is on set, then any function using the decimator requires a digital block timer to sample the current decimator value. Normally, the positive edge of this signal causes the decimator output to be sampled. However, when the IDEC bit is set, the negative edge of the selected digital block input causes the decimator value to be sampled.

Bits 5 to 0: ICLKSx and DCLKSx. The ICLKS3, ICLKS2, ICLKS1, DCLKS3, DCLKS2, and DCLKS1 bits in this register select the digital block sources for Incremental and DELSIG ADC hardware support (see the DEC_CR0 register).

For additional information, refer to the DEC_CR1 register on page 213.

27.2.5 DECx_CR0 Register

Address	Name	Bit 7	Bit 6	Bit 5	Bit 4	Bit 3	Bit 2	Bit 1	Bit 0	Access
1,91h	DEC0_CR0	POL	GOOO	GOOE			DATA_IN[2:0]			RW : 00
1,95h	DEC1_CR0	POL	GOOO	GOOE			DATA_IN[2:0]			RW : 00
1,99h	DEC2_CR0	POL	GOOO	GOOE			DATA_IN[2:0]			RW : 00
1,9Dh	DEC3_CR0	POL	GOOO	GOOE			DATA_IN[2:0]			RW : 00

Bit 7: POL. This bit, when set to ‘1’, inverts the data input.

Bit 6: GOOO. This bit, when set to ‘1’, enables the related decimator data input to be output to Global Digital Output Odd Bus.

Decimator #	GOO Bus Bit
0	Output to GOO[1]
1	Output to GOO[3]
2	Output to GOO[5]
3	Output to GOO[7]

Bit 5: GOOE. This bit, when set to ‘1’, enables the related decimator data input to be output to Global Digital Output Even Bus.

Decimator #	GOO Bus Bit
0	Output to GOO[0]
1	Output to GOO[2]
2	Output to GOO[4]
3	Output to GOO[6]

Bits 2 to 0: DATA_IN[2:0]. These bits are used to select one decimator data input from among the following sources. The 'x' in the following table is the corresponding decimator number.

000b	ACCx_CMPO, the corresponding analog column compare bus output.
001b	BCROWx, the corresponding Broadcast net from digital blocks. Note that it is fixed 'HIGH' for decimator 3.
010b	The compare bus output of analog column 4 (Type-E column).
011b	The compare bus output of analog column 5 (Type-E column).
100b	ROW0LUTx, the corresponding LUT output from digital row 0.
101b	ROW1LUTx, the corresponding LUT output from digital row 1.
110b	ROW2LUTx, the corresponding LUT output from digital row 2.
111b	LOW (reserved)

For additional information, refer to the DECx_CR0 register on page 267.

27.2.6 DEC_CR3 Register

Address	Name	Bit 7	Bit 6	Bit 5	Bit 4	Bit 3	Bit 2	Bit 1	Bit 0	Access
1,92h	DEC_CR3	DEC1_EN		CLK_IN1[2:0]		DEC0_EN		CLK_IN0[2:0]		RW : 00

The control bits in DEC_CR3 define the decimator clock selections.

Bit 7: DEC1_EN. This bit, when set to ‘1’, enables decimator 1.

Bits 6 to 4: CLK_IN1[2:0]. These bits select one of the following sources as decimator 1 clock.

000b	VC1
001b	VC2
010b	CLKA4 (from analog column 4)
011b	CLKA5 (from analog column 5)
100b	VC3
101b	Preselected clock source (from digital block primary outputs). See DEC_CR5.
110b	Reserved
111b	LOW (Reserved)

Bit 3: DEC0_EN. This bit, when set to ‘1’, enables decimator 0.

Bits 2 to 0: CLK_IN0[2:0]. These bits select one of the following sources as decimator 0 clock.

000b	VC1
001b	VC2
010b	CLKA4 (from analog column 4)
011b	CLKA5 (from analog column 5)
100b	VC3
101b	Preselected clock source (from digital block primary outputs). See DEC_CR5.
110b	Reserved
111b	LOW (Reserved)

For additional information, refer to the DEC_CR3 register on page 268.

27.2.7 DEC_CR4 Register

Address	Name	Bit 7	Bit 6	Bit 5	Bit 4	Bit 3	Bit 2	Bit 1	Bit 0	Access
1,96h	DEC_CR4	DEC3_EN	CLK_IN3[2:0]			DEC2_EN	CLK_IN2[2:0]			RW : 00

The control bits in DEC_CR4 define the decimator clock selections.

Bit 7: DEC3_EN. This bit, when set to '1', enables decimator 3.

Bits 6 to 4: CLK_IN3[2:0]. These bits select one of the following sources as decimator 3 clock.

000b	VC1
001b	VC2
010b	CLKA4 (from analog column 4)
011b	CLKA5 (from analog column 5)
100b	VC3
101b	Preselected clock source (from digital block primary outputs). See DEC_CR5.
110b	Reserved
111b	LOW (Reserved)

Bit 3: DEC2_EN. This bit, when set to '1', enables decimator 2.

Bits 2 to 0: CLK_IN2[2:0]. These bits select one of the following sources as decimator 2 clock.

000b	VC1
001b	VC2
010b	CLKA4 (from analog column 4)
011b	CLKA5 (from analog column 5)
100b	VC3
101b	Preselected clock source (from digital block primary outputs). See DEC_CR5.
110b	Reserved
111b	LOW (Reserved)

For additional information, refer to the DEC_CR4 register on page 269.

27.2.8 DEC_CR5 Register

Address	Name	Bit 7	Bit 6	Bit 5	Bit 4	Bit 3	Bit 2	Bit 1	Bit 0	Access
1,9Ah	DEC_CR5					DSCLK[3:0]				RW : 00

Bits 3 to 0: DSCLK[3:0]. These bits indicate which digital block's primary output is selected as a decimator clock source. Note that LOW is selected when DSCLK is greater than 1011b.

For additional information, refer to the DEC_CR5 register on page 270.

27.2.9 DECx_CR Registers

Address	Name	Bit 7	Bit 6	Bit 5	Bit 4	Bit 3	Bit 2	Bit 1	Bit 0	Access
1,D4h	DEC0_CR	Mode[1:0]		Data Out Shift[1:0]		Data Format	Decimation Rate[2:0]			RW : 00
1,D5h	DEC1_CR	Mode[1:0]		Data Out Shift[1:0]		Data Format	Decimation Rate[2:0]			RW : 00
1,D6h	DEC2_CR	Mode[1:0]		Data Out Shift[1:0]		Data Format	Decimation Rate[2:0]			RW : 00
1,D7h	DEC3_CR	Mode[1:0]		Data Out Shift[1:0]		Data Format	Decimation Rate[2:0]			RW : 00

Bits 7 and 6: Mode[1:0]. These bits signify the mode of operation of the type 2 decimator block. A ‘00’ in Mode enables the user to configure the type 2 block to match a type 1 behavior, where the input data stream is integrated and an external firmware performs the resampling/differentiation process required to complete the Sinc2 filtering. If Mode is ‘01’, the decimator block can be used in an incremental mode. For the type 1 decimator block, this function is performed by bit 7 of DEC_CR1 register. If a decimator-based incremental ADC is to be configured, the Mode bits are set to ‘01’. The full algorithm (when Mode is set to ‘10’) implies the usage of the decimator as a Sinc2 block, to be used in delta-sigma ADCs. The selection of ‘11’ for Mode is Reserved.

Bits 5 and 4: Data Out Shift[1:0]. The Data Output Shift bits can be determined from Table 27-7, which enumerates the available operating modes. To compute the effective resolution, the following equations are used:

Single Modulator: (log2 (Decimation Rate) – 1) × 1.5
Double Modulator: (log2 (Decimation Rate) – 1) × 2

Table 27-7. Decimator Data Output Shift

Decimation Rate	Modulator Type	Effective Resolution	Shift
32	Single	6	4
32	Double	8	2
64	Single	*8 (7.5)	4
64	Double	10	2
128	Single	9	5
128	Double	12	2
256	Single	*11 (10.5)	5
256	Double	14	2

Bit 3: Data Format. The Data Format bit can be weighted as signed (2s complement output) or unsigned (offset binary data).

Bits 2 to 0: Decimation Rate. The devices with type 2 decimator blocks have the choice of using an internal or external timer. If an internal timer is used, the user can program the Decimation Rate for the appropriate decimation rate or simply use the external timer after setting the Decimation Rate bits to zero.

For additional information, refer to the DECx_CR register on page 290.

28. I²C

This chapter explains the I²C™ block and its associated registers. The I²C communications block is a serial processor designed to implement a complete I²C slave or master. For a complete table of the I²C registers, refer to the "Summary Table of the System Resource Registers" on page 462. For a quick reference of all PSoC® registers in address order, refer to the Register Details chapter on page 125.

28.1 Architectural Description

The I²C communications block is a serial to parallel processor, designed to interface the PSoC device to a two-wire I²C serial communications bus. To eliminate the need for excessive M8C microcontroller intervention and overhead, the block provides I²C specific support for status detection and generation of framing bits.

The I²C block directly controls the data (SDA) and clock (SCL) signals to the external I²C interface, through connections to two dedicated GPIO pins. The PSoC device firmware interacts with the block through I/O (input/output) register reads and writes, and firmware synchronization will be implemented through polling and/or interrupts.

PSoC I²C features include:

- Master/Slave, Transmitter/Receiver operation
- Byte processing for low CPU overhead
- Interrupt or polling CPU interface
- Master clock rates: 50K, 100K, 400K
- Multi-master clock synchronization
- Multi-master mode arbitration support
- 7- or 10-bit addressing (through firmware support)
- Optional hardware support for automatic address comparison (7-bit address and slave mode only)
- SMBus operation (through firmware support)

Hardware functionality provides basic I²C control, data, and status primitives. A combination of hardware support and firmware command sequencing provides a high degree of flexibility for implementing the required I²C functionality.

Hardware limitations in regards to I²C are as follows:

- Because receive and transmitted data are not buffered, there is no support for automatic receive acknowledge. The M8C microcontroller must intervene at the boundary of each byte and either send a byte or ACK received bytes.

The I²C block is designed to support a set of primitive operations and detect a set of status conditions specific to the I²C protocol. These primitive operations and conditions are manipulated and combined at the firmware level to support the required data transfer modes. The CPU will set up control options and issue commands to the unit through I/O writes and obtain status through I/O reads and interrupts.

The block operates as either a slave, a master, or both. When enabled in Slave mode, the unit is always listening for a Start condition, or sending or receiving data. Master mode can work in conjunction with Slave mode. The master supplies the ability to generate the START or STOP condition and determine if other masters are on the bus. For Multi-Master mode, clock synchronization is supported. If Master mode is enabled and Slave mode is not enabled, the block does not generate interrupts on externally generated Start conditions.

28.1.1 Dual I²C HW

The CY8C28xxx family offers two I²C HW blocks. These two blocks are functionally identical to each other. The main differences are the pin pairs they map to, and their interrupt vectors. Several devices in the CY8C28xxx family offer only one I²C block; refer to a device distinctions table.

Figure 28-1. Block Diagram with Two I²C Blocks

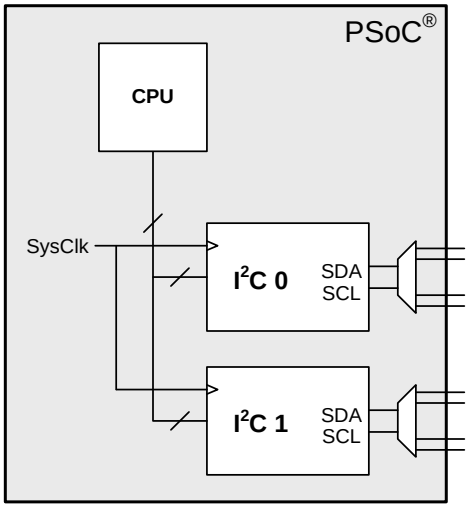

28.1.2 Basic I²C Data Transfer

Figure 28-2 shows the basic form of data transfers on the I2C bus with a 7-bit address format. (For a more detailed description, see the *NXP I²C-bus™ Specification and User Manual, version 03*.)

A Start condition (generated by the master) is followed by a data byte, consisting of a 7-bit slave address (there is also a 10-bit address mode) and a Read/Write (RW) bit. The RW bit sets the direction of data transfer. The addressed slave is required to acknowledge (ACK) the bus by pulling the data line low during the ninth bit time. If the ACK is received, the transfer may proceed and the master can transmit or receive an indeterminate number of bytes, depending on the RW direction. If the slave does not respond with an ACK for any reason, a Stop condition is generated by the master to terminate the transfer or a Restart condition may be generated for a retry attempt.

Figure 28-2. Basic I²C Data Transfer with 7-Bit Address Format

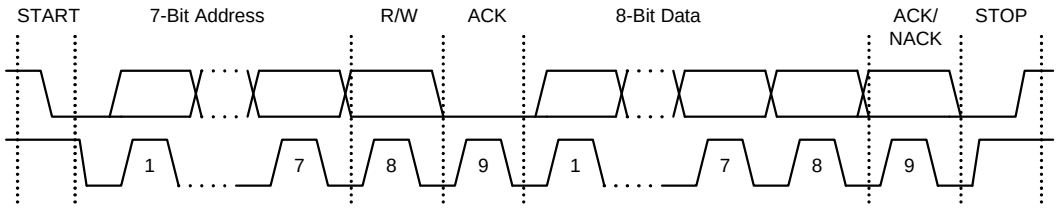

28.2 Application Description

28.2.1 Slave Operation

Assuming Slave mode is enabled, it is continually listening to or on the bus for a Start condition. When detected, the transmitted Address/RW byte is received and compared by either firmware or hardware:

1. In firmware address comparison mode, at the point where eight bits of the address/RW byte are received, a byte complete interrupt is generated. Following the low of the clock, the bus is stalled by holding the SCL line low, until the PSoC device has a chance to read the address byte and compare it to its own address. It will issue an ACK or NAK command based on that comparison.
2. In hardware address comparison mode, the received address is automatically compared when the address/RW byte is completed, and the hardware will automatically issue an NAK if address mismatches. If address matches, a byte complete interrupt is generated, which is similar in the firmware comparison. Following the low of the clock, the bus is stalled by holding the SCL line low, until the PSoC device has a chance to read the address byte to determine the R/W I²C operation (firmware does not need to compare the address). Finally, the firmware needs to issue an ACK to continue I²C operation.

If there is an address match, the RW bit determines how the PSoC device will sequence the data transfer in Slave mode, as shown in the two branches of Figure 28-3. I²C handshaking methodology (slave holds the SCL line low to “stall” the bus) will be used as necessary, to give the PSoC device time to respond to the events and conditions on the bus. Figure 28-3 is a graphical representation of a typical data transfer from the slave perspective.

Figure 28-3. Slave Operation

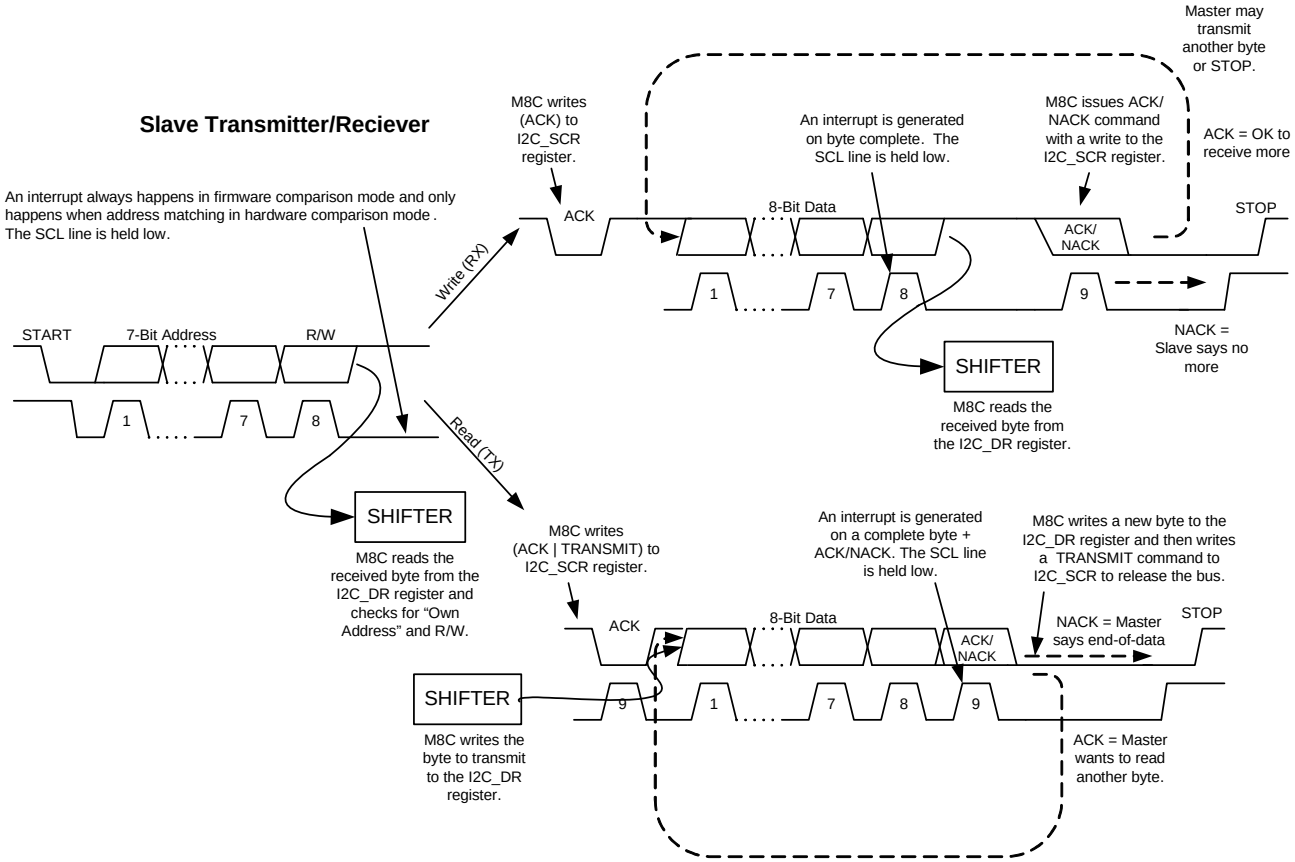

28.2.2 Master Operation

To prepare for a Master mode transaction, the PSoC device must determine if the bus is free. This is done by polling the BusBusy status. If busy, interrupts can be enabled to detect a Stop condition. When it is determined that the bus is available, firmware should write the address byte into the I2C_DR register and set the Start Gen bit in the I2C_MSCR register.

If the slave sub-unit is not enabled, the block is in Master Only mode. In this mode, the unit does not generate interrupts or stall the I²C bus on externally generated Start conditions.

In a multi-master environment there are two additional outcomes possible:

1. The PSoC device was too late to reserve the bus as a master, and another master may have generated a Start and sent an Address/RW byte. In this case, the unit as a master will fail to generate a Start and is forced into Slave mode. The Start will be pending and eventually occur at a later time when the bus becomes free. When the interrupt occurs in Slave mode, the PSoC device can determine that the Start command was unsuccessful by reading the I2C_MSCR register Start bit, which is reset on successful Start from this unit as master. If this bit is still a '1' on the Start/Address interrupt, it means that the unit is operating in Slave mode. In this case, the data register has the master's address data.
2. If another master starts a transmission at the same time as this unit, arbitration occurs. If this unit loses the arbitration, the LostArb status bit is set. In this case, the block releases the bus and switches to Slave operation. When the Start/Address interrupt occurs, the data register has the winning master's address data.

Figure 28-4 is a graphical representation of a typical data transfer from the master perspective.

Figure 28-4. Master Operation

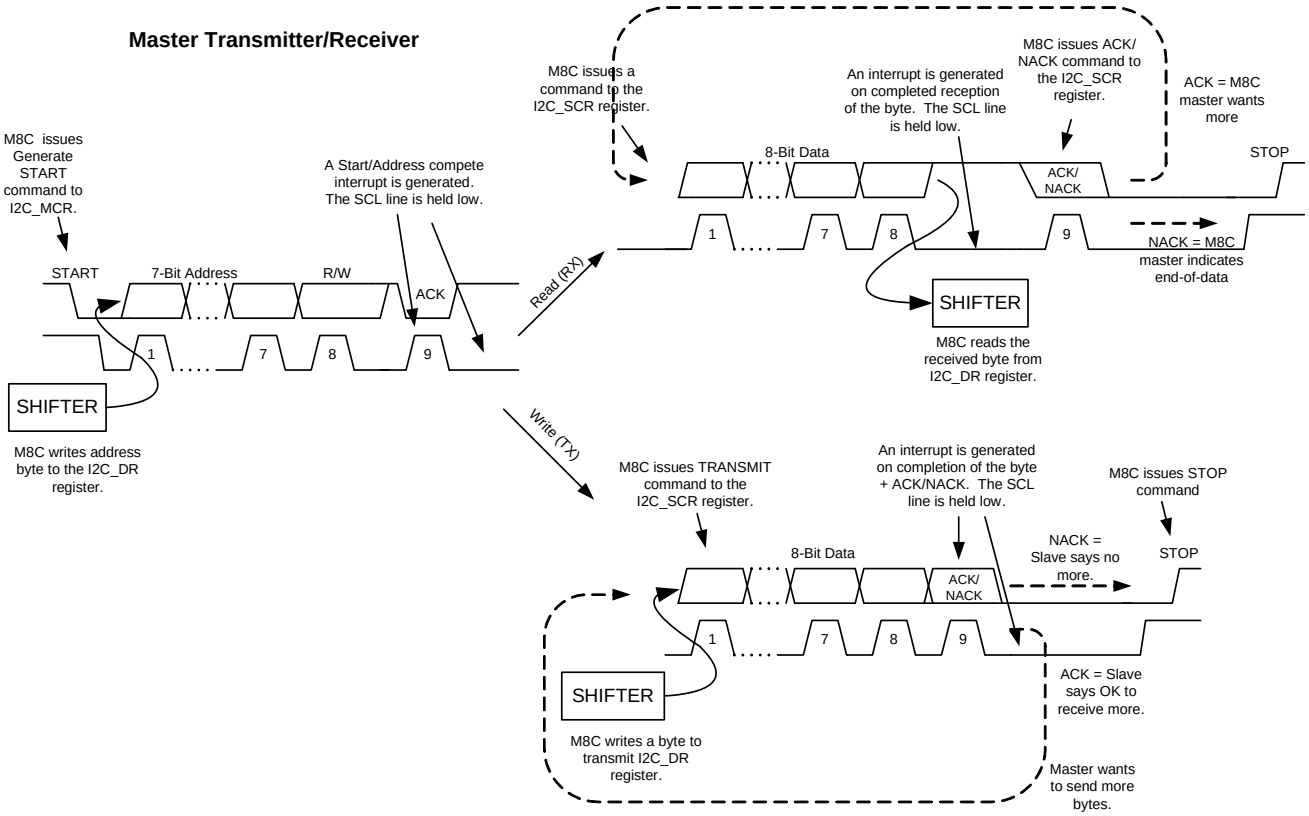

28.3 Register Definitions

The following registers are associated with I²C and are listed in address order. Each register description has an associated register table showing the bit structure for that register. The bits in the tables that are grayed out are reserved bits and are not detailed in the register descriptions that follow. Reserved bits should always be written with a value of '0'. For a complete table of I²C registers, refer to the "Summary Table of the System Resource Registers" on page 462.

28.3.1 I2Cx_ADDR Register

Address	Name	Bit 7	Bit 6	Bit 5	Bit 4	Bit 3	Bit 2	Bit 1	Bit 0	Access
1,Axh	I2Cx_ADDR	HwAddrEn	Addr[6:0]							RW : 00

LEGEND

Xx An "x" in the address field indicates that there are multiple instances of the register. For an expanded address listing of these registers, refer to the "System Resources Register Summary" on page 462.

Note 2nd I²C block in CY8C28x03, CY8C28x23, CY8C28x43, and CY8C28x45 devices only.

The I²C address register is used to configure the hardware address automatic comparison feature so that the microcontroller will not be disturbed by an unwanted slave request. When HwAddrEn is enabled, the 7-bit address should be stored in Addr[6:0]; there is an interrupt only when the received address matches the stored address.

The hardware address automatic compare feature is available in slave only mode; master/slave mode is not supported.

Table 28-1. I2C_ADDR Configuration Register

Bit	Access	Description	Mode
7	RW	HwAddrEn: 1: Enable hardware address comparison feature. Only supports 7-bit address. When you enable the hardware address comparison feature, I²C block will not support the special system address definition which is listed in I²C V2.1 spec, section 10 (for example: general call address, CBUS address, 10-bit slave address, and so on). 0: Disable hardware address comparison feature.	Slave Only
6:0	RW	Slave Address[6:0]: These 7 bits hold the slave's own device address.	Slave Only

For additional information, refer to the I2Cx_ADDR register on page 284.

28.3.2 I2Cx_CFG Register

Address	Name	Bit 7	Bit 6	Bit 5	Bit 4	Bit 3	Bit 2	Bit 1	Bit 0	Access
X,xxh	I2Cx_CFG		PSelect	Bus Error IE	Stop IE	Clock Rate[1:0]		Enable Master	Enable Slave	RW : 00

LEGEND
Xx An "x" in the address field indicates that there are multiple instances of the register. For an expanded address listing of these registers, refer to the "System Resources Register Summary" on page 462.
Note 2nd I2C block in CY8C28x03, CY8C28x23, CY8C28x43, and CY8C28x45 devices only.

The I2C Configuration Register (I2C_CFG) is used to set the basic operating modes, baud rate, and selection of interrupts.

The bits in this register control baud rate selection and optional interrupts. The values are typically set once for a given configuration. The bits in this register are all RW.

Table 28-2. I2Cx_CFG Configuration Register

Bit	Access	Description	Mode
6	RW	I2C0 Pin Select 0 = P1[7], P1[5] 1 = P1[1], P1[0] I2C1 Pin Select 0 = P1[6], P1[2] 1 = P3[2], P3[0]	Master/ Slave
5	RW	Bus Error IE Bus error interrupt enable. 0 = Disabled. 1 = Enabled. An interrupt is generated on the detection of a Bus Error.	Master Only
4	RW	Stop IE Stop interrupt enable. 0 = Disabled. 1 = Enabled. An interrupt is generated on the detection of a Stop Condition.	Master/ Slave
3:2	RW	Clock Rate 00b = 100K Standard Mode 01b = 400K Fast Mode 10b = 50K Standard Mode 11b = Reserved	Master/ Slave
1	RW	Enable Master 0 = Disabled 1 = Enabled	Master/ Slave
0	RW	Enable Slave 0 = Disabled 1 = Enabled	Master/ Slave

Bit 6: PSelect. With the default value of zero, the I2C0 pins are P1[7] for clock and P1[5] for data (P1[6] and P1[2] for I2C1 clock and data, respectively). When this bit is set, the pins for I2C0 switch to P1[1] for clock and P1[0] for data (P3[2] and P3[0] for I2C1 clock and data, respectively). This bit may not be changed while either the Enable Master or Enable Slave bits are set. However, the PSelect bit may be set at the same time as the enable bits. The two sets of pins that may be used on I2C0 are not equivalent. The default set, P1[7] and P1[5], are the preferred set. The alternate set, P1[1] and P1[0], are provided so that I2C0 may be used with 8-pin PSoC parts. It is similar for I2C1. The alternate set (P3[2] and P3[0]) might be used when port 3 is provided.

If you are using In-System Serial Programming (ISSP) and also using the alternate I2C0 pin set, take into account the interaction between the PSoC Test Controller and the I2C bus. Review the interface requirements for ISSP to ensure that they are not violated.

Even if ISSP is not used, pins P1[1] and P1[0] will respond differently to a POR or XRES event than other I/O pins. After an XRES event, both pins are pulled down to ground by going into the resistive zero Drive mode, before reaching the High-Z Drive mode. After a POR event, P1[0] will drive out a one, then go to the resistive zero state for some time, and finally reach the High-Z drive mode state. After POR, P1[1] will go into a resistive zero state for a while, before going to the High-Z Drive mode.

Another issue with selecting the alternate I2C pins set is that these pins are also the crystal pins. Therefore, a crystal may not be used when the alternate I2C pin set is selected.

Bit 5: Bus Error IE (Interrupt Enable). This bit controls whether the detection of a bus error will generate an interrupt. A bus error is typically a misplaced Start or Stop.

This is an important interrupt with respect to Master operation. When there is a misplaced Start or Stop on the I2C bus, all slave devices (including this device, if Slave mode is enabled) will reset the bus interface and synchronize to this signal. However, when the hardware detects a bus error in Master Mode operation, the device will release the bus and transition to an idle state. In this case, a Master operation in progress will never have any further status or interrupts associated with it. Therefore, the master may not be able to determine the status of that transaction. An immediate bus error interrupt will inform the master that this transfer did not succeed.

Bit 4: Stop IE (Interrupt Enable). When this bit is set, a master or slave can interrupt on Stop detection. The status bit associated with this interrupt is the Stop Status bit in the Slave Status and Control register. When the Stop Status bit transitions from '0' to '1', the interrupt is generated. It is important to note that the Stop Status bit is not automatically cleared. Therefore, if it is already set, no new interrupts are generated until it is cleared by firmware.

Bits 3 and 2: Clock Rate[1:0]. These bits offer a selection of three sampling and bit rates. All block clocking is based on the SYSCLK input, which is nominally 24 MHz (unless the PSoC device is in external clocking mode). The sampling rate and the baud rate are determined as follows:

- Sample Rate = SYSCLK/Pre-scale Factor
- Baud Rate = 1/(Sample Rate x Samples per Bit)

The nominal values, when using the internal 24 MHz oscillator, are shown in Table 28-3.

Table 28-3. I²C Clock Rates

Clock Rate [1:0]	I²C Mode	SYSCLK Pre-scale Factor	Samples per Bit	Internal Sampling Freq./Period (24 MHz)	Master Baud Rate (nominal)	Start/Stop Hold Time (8 clocks)
00b	Standard	/16	16	1.5 MHz/667 ns	93.75 kHz	5.3 µs
01b	Fast	/4	16	6 MHz/167 ns	375 kHz	1.33 µs
10b	Standard	/16	32	1.5 MHz/667 ns	46.8 kHz	10.7 µs
11b	Reserved					

When clocking the input with a frequency other than 24 MHz (for example, clocking the PSOC device with an external clock), the baud rates and sampling rates will scale accordingly. Whether the block will work in a Standard Mode or Fast Mode system depends on the sample rate. The sample rate must be sufficient to resolve bus events, such as Start and Stop conditions. (See the *NXP I²C-bus™ Specification and User Manual, version 03*, for minimum Start and Stop hold times.)

Bit 1: Enable Master. When this bit is set, the Master Status and Control register is enabled (otherwise it is held in reset) and I²C transfers can be initiated in Master mode. When the master is enabled and operating, the block will clock the I²C bus at one of three baud rates, defined in the Clock Rate register. When operating in Master mode, the hardware is multi-master capable, implementing both clock synchronization and arbitration. If the Slave Enable bit is not set, the block will operate in Master Only mode. All external Start conditions are ignored (although the Bus Busy status bit will still keep track of bus activity). Block enable will be synchronized to the SYSCLK clock input (see “Timing Diagrams” on page 504).

Bit 0: Enable Slave. When the slave is enabled, the block generates an interrupt on any Start condition and an address byte that it receives, indicating the beginning of an I²C transfer. When operating as a slave, the block is clocked from an external master. Therefore, the block will work at any frequency up to the maximum defined by the currently selected clock rate. The internal clock is only used in Slave mode, to ensure that there is adequate setup time from data output to the next clock on the release of a slave stall. When the Enable Slave and Enable Master bits are both ‘0’, the block is held in reset and all status is cleared. See Figure 28-4 for a description of the interaction between the Master/Slave Enable bits. Block enable will be synchronized to the SYSCLK clock input (see “Timing Diagrams” on page 504).

Table 28-4. Enable Master/Slave Block Operation

Enable Master	Enable Slave	Block Operation
No	No	Disabled: The block is disconnected from the GPIO pins, P1[5] and P1[7]. (The pins may be used as general purpose I/O.) When either the master or slave is enabled, the GPIO pins are under control of the I²C hardware and are unavailable. All internal registers (except I2C_CFG) are held in reset.
No	Yes	Slave Only Mode: Any external Start condition will cause the block to start receiving an address byte. Regardless of the current state, any Start resets the interface and initiates a Receive operation. Any Stop will cause the block to revert to an idle state The I2C_MSCR register is held in reset.
Yes	No	Master Only Mode: External Start conditions are ignored in this mode. No Byte Complete interrupts on external traffic are generated, but the Bus Busy status bit continues to capture Start and Stop status, and thus may be polled by the master to determine if the bus is available. Full multi-master capability is enabled, including clock synchronization and arbitration. The block will generate a clock based on the setting in the Clock Rate register
Yes	Yes	Master/Slave Mode: Both master and slave may be operational in this mode. The block may be addressed as a slave, but firmware may also initiate Master mode transfers. In this configuration, when a master loses arbitration during an address byte, the hardware will revert to Slave mode and the received byte will generate a slave address interrupt.

For additional information, refer to the I2Cx_CFG register on page 194.

28.3.3 I2Cx_SCR Register

Address	Name	Bit 7	Bit 6	Bit 5	Bit 4	Bit 3	Bit 2	Bit 1	Bit 0	Access
0,xxh	I2Cx_SCR	Bus Error	Lost Arb	Stop Status	ACK	Address	Transmit	LRB	Byte Complete	# : 00

LEGEND

Access is bit specific. Refer to Table 28-5 for detailed bit descriptions.

Xx An "x" in the address field indicates that there are multiple instances of the register. For an expanded address listing of these registers, refer to the "System Resources Register Summary" on page 462.

Note 2nd I2C block in CY8C28x03, CY8C28x23, CY8C28x43, and CY8C28x45 devices only.

The I2C Status and Control Register (I2C_SCR) is used by both master and slave to control the flow of data bytes and to keep track of the bus state during a transfer.

This register contains status bits, for determining the state of the current I2C transfer, and control bits, for determining the actions for the next byte transfer. At the end of each byte transfer, the I2C hardware interrupts the M8C microcontroller and stalls the I2C bus on the subsequent low of the clock, until the PSoC device intervenes with the next command. This register may be read as many times as necessary; but on a subsequent write to this register, the bus stall is released and the current transfer will continue.

There are six status bits: Byte Complete, LRB, Address, Stop Status, Lost Arb, and Bus Error. These bits have Read/Clear (R/C) access, which means that they are set by hardware but may be cleared by a write of '0' to the bit position. Under certain conditions, status is cleared automatically by the hardware. These cases are noted in Table 28-5.

There are two control bits: Transmit and ACK. These bits have RW access and may be cleared by hardware.

Bit 7: Bus Error. The Bus Error status detects misplaced Start or Stop conditions on the bus. These may be due to noise, rogue devices, or other devices that are not yet synchronized with the I2C bus traffic. According to the I2C specification, all compatible devices must reset their interface on a received Start or Stop. This is a natural thing to do in Slave mode, because a Start will initiate an address reception and a Stop will idle the slave. In the case of a master, this event will force the master to release the bus and idle. However, because a master does not respond to external Start or Stop conditions, an immediate interrupt on this event allows the master to continue to keep track of the bus state.

A bus error is defined as follows. A Start is only valid if the block is idle (master or slave) or a Slave receiver is ready to receive the first bit of a new byte after an ACK. Any other timing for a Start condition causes the Bus Error bit to be set. A Stop is only valid if the block is idle or a Slave receiver is ready to receive the first bit of a new byte after an ACK. Any other timing for a Stop condition causes the Bus Error bit to be set.

Table 28-5. I2C_SCR Status and Control Register

Bit	Access	Description	Mode
7	RC	Bus Error 1 = A misplaced Start or Stop condition was detected. This status bit must be cleared by firmware with a write of '0' to the bit position. It is never cleared by the hardware.	Master Only
6	RC	Lost Arb 1 = Lost Arbitration. This bit is set immediately on lost arbitration; however, it does not cause an interrupt. This status may be checked after the following Byte Complete interrupt. Any Start detect will automatically clear this bit.	Master Only
5	RC	Stop Status 1 = A Stop condition was detected. This status bit must be cleared by firmware with a write of '0' to the bit position. It is never cleared by the hardware.	Master/ Slave
4	RW	ACK: Acknowledge Out 0 = NAK the last received byte. 1 = ACK the last received byte. This bit is automatically cleared by hardware on the following Byte Complete event.	Master/ Slave
3	RC	Address 1 = The transmitted or received byte is an address. This status bit must be cleared by firmware with a write of '0' to the bit position.	Master/ Slave
2	RW	Transmit 0 = Receive Mode. 1 = Transmit Mode. This bit is set by firmware to define the direction of the byte transfer. Any Start detect will automatically clear this bit.	Master/ Slave
1	RC	LRB: Last Received Bit The value of the ninth bit in a Transmit sequence, which is the acknowledge bit from the receiver. 0 = Last transmitted byte was ACKed by the receiver. 1 = Last transmitted byte was NAKed by the receiver. Any Start detect will automatically clear this bit.	Master/ Slave
0	RC	Byte Complete Transmit Mode: 1 = 8 bits of data have been transmitted and an ACK or NAK has been received. Receive Mode: 1 = 8 bits of data have been received. Any Start detect will automatically clear this bit.	Master/ Slave

Bit 6: Lost Arb. This bit is set when I2C bus contention is detected, during a Master mode transfer. Contention will occur when a master is writing a '1' to the SDA output line and reading back a '0' on the SDA input line at the given sampling point. When this occurs, the block immediately releases the SDA, but continues clocking to the end of the current byte. On the resulting byte interrupt, firmware can determine that arbitration was lost to another master by reading this bit.

The sequence occurs differently between Master transmitter and Master receiver. As a transmitter, the contention will occur on a data bit. On the subsequent Byte Complete interrupt, the Lost Arbitration status is set. In Receiver mode, the contention will occur on the ACK bit. The master that NAKed the last reception will lose the arbitration. However, the hardware will shift in the next byte in response to the winning master's ACK, so that a subsequent Byte Complete interrupt occurs. At this point, the losing master can read the Lost Arbitration status. Contention is checked only at the eight data bit sampling points and one ACK bit sampling point.

Bit 5: Stop Status. Stop status is set on detection of an I2C Stop condition. This bit is sticky, which means that it will remain set until a '0' is written back to it by the firmware. This bit may only be cleared if the Byte Complete status is set. If the Stop Interrupt Enable bit is set, an interrupt is also generated on Stop detection. It is never automatically cleared.

Using this bit, a slave can distinguish between a previous Stop or Restart on a given address byte interrupt. In Master mode, this bit may be used in conjunction with the Stop IE bit, to generate an interrupt when the bus is free. However, in this case, the bit must have previously been cleared prior to the reception of the Stop to cause an interrupt.

Bit 4: ACK. This control bit defines the acknowledge data bit that is transmitted out in response to a received byte. When receiving, a Byte Complete interrupt is generated after the eighth data bit is received. On the subsequent write to this register to continue (or terminate) the transfer, the state of this bit will determine the next bit of data that is transmitted. It is ***active high***. A '1' will send an ACK and a '0' will send a NAK.

A Master receiver normally terminates a transfer, by writing a '0' (NAK) to this bit. This releases the bus and automatically generates a Stop condition. A Slave receiver may also send a NAK, to inform the master that it cannot receive any more bytes.

Bit 3: Address. This bit is set when an address has been received. This consists of a Start or Restart, and an address byte. This bit applies to both master and slave.

In Slave mode, when this status is set, firmware will read the received address from the data register and compare it with its own address. If the address does not match, the firmware will write a NAK indication to this register. No further interrupts will occur, until the next address is received. If the address does match, firmware must ACK the received byte, then Byte Complete interrupts are generated on subsequent bytes of the transfer.

This bit will also be set when address transmission is complete in Master mode. If a lost arbitration occurs during the transmission of a master address (indicated by the Lost Arb bit), the block will revert to Slave mode if enabled. This bit then signifies that the block is being addressed as a slave.

If Slave mode is not enabled, the Byte Complete interrupt will still occur to inform the master of lost arbitration.

Bit 2: Transmit. This bit sets the direction of the shifter for a subsequent byte transfer. The shifter is always shifting in data from the I2C bus, but a write of '1' enables the output of the shifter to drive the SDA output line. Because a write to this register initiates the next transfer, data must be written to the data register prior to writing this bit. In Receive mode, the previously received data must have been read from the data register before this write. In Slave mode, firmware derives this direction from the RW bit in the received slave address. In Master mode, the firmware decides on the direction and sets it accordingly.

This direction control is only valid for data transfers. The direction of address bytes is determined by the hardware, depending on the Master or Slave mode.

The Master transmitter terminates a transfer by writing a zero to the transmit bit. This releases the bus and automatically sends a Stop condition, or a Stop/Start or Restart, depending on the I2C_MSCR control bits.

Bit 1: LRB (Last Received Bit). This is the last received bit in response to a previously transmitted byte. In Transmit mode, the hardware will send a byte from the data register and clock in an acknowledge bit from the receiver. On the subsequent byte complete interrupt, firmware will check the value of this bit. A '0' is the ACK value and a '1' is a NAK value. The meaning of the LRB depends on the current operating mode.

Master Transmitter:

'0': ACK. The slave has accepted the previous byte. The master may send another byte by first writing the byte to the I2C_DR register and then setting the Transmit bit in the I2C_SCR register. Optionally, the master may clear the Transmit bit in the I2C_SCR register. This will automatically send a Stop. If the Start or Restart bits are set in the I2C_MSCR register, the Stop may be followed by a Start or Restart.

'1': NAK. The slave cannot accept any more bytes. A Stop is automatically generated by the hardware on the subsequent write to the I2C_SCR register (regardless of the value written). However, a Stop/Start or Restart condition may also be generated, depending on whether

firmware has set the Start or Restart bits in the I2C_MSCR register.

Slave Transmitter:

'0': ACK. The master wants to read another byte. The slave should load the next byte into the I2C_DR register and set the transmit bit in the I2C_SCR register to continue the transfer.

'1': NAK. The master is done reading bytes. The slave will revert to IDLE state on the subsequent I2C_SCR write (regardless of the value written).

Bit 0: Byte Complete. The I²C hardware operates on a byte basis. In Transmit mode, this bit is set and an interrupt is generated at the end of nine bits (the transmitted byte + the received ACK). In Receive mode, the bit is set after the eight bits of data are received. When this bit is set, an interrupt is generated at these data sampling points, which are associated with the SCL input clock rising (see details in the Timing section). If the PSoC device responds with a write back to this register before the subsequent falling edge of SCL (which is approximately one-half bit time), the transfer will continue without interruption. However, if the PSoC device is unable to respond within that time, the hardware will hold the SCL line low, stalling the I²C bus. In both Master and Slave mode, a subsequent write to the I2C_SCR register will release the stall.

For additional information, refer to the I2Cx_SCR register on page 195.

28.3.4 I2Cx_DR Register

Address	Name	Bit 7	Bit 6	Bit 5	Bit 4	Bit 3	Bit 2	Bit 1	Bit 0	Access
0,xxh	I2Cx_DR	Data[7:0]								RW : 00

LEGEND
Xx An "x" in the address field indicates that there are multiple instances of the register. For an expanded address listing of these registers, refer to the "System Resources Register Summary" on page 462.
Note 2nd I²C block in CY8C28x03, CY8C28x23, CY8C28x43, and CY8C28x45 devices only.

The I²C Data Register (I2C_DR) provides read/write access to the Shift register.

Bits 7 to 0: Data[7:0]. This register is not buffered; and therefore, writes and valid data reads may only occur at specific points in the transfer. These cases are outlined as follows.

- **Master or Slave Receiver** – Data in the I2C_DR register is only valid for reading, when the Byte Complete status bit is set. Data bytes must be read from the register before writing to the I2C_SCR register, which continues the transfer.
- **Master Start or Restart** – Address bytes must be written in I2C_DR before the Start or Restart bit is set in the I2C_MSCR register, which causes the Start or Restart to generate and the address to shift out.
- **Master or Slave Transmitter** – Data bytes must be written to the I2C_DR register before the transmit bit is set in the I2C_SCR register, which causes the transfer to continue.

For additional information, refer to the I2Cx_DR register on page 197.

28.3.5 I2Cx_MSCR Register

Address	Name	Bit 7	Bit 6	Bit 5	Bit 4	Bit 3	Bit 2	Bit 1	Bit 0	Access
0,xxh	I2Cx_MSCR					Bus Busy	Master Mode	Restart Gen	Start Gen	R : 00

LEGEND
Xx An "x" in the address field indicates that there are multiple instances of the register. For an expanded address listing of these registers, refer to the "System Resources Register Summary" on page 462.
Note 2nd I²C block in CY8C28x03, CY8C28x23, CY8C28x43, and CY8C28x45 devices only.

The I²C Master Status and Control Register (I2C_MSCR) implements I²C framing controls and provides Bus Busy status.

Bit 3: Bus Busy. This read only bit is set to '1' by any Start condition and reset to '0' by a Stop condition. It may be polled by firmware to determine when a bus transfer may be initiated.

Bit 2: Master Mode. This bit indicates that the device is operating as a master. It is set in the detection of this block's Start condition and reset in the detection of the subsequent Stop condition.

Bit 1: Restart Gen. This bit is only used at the end of a master transfer (as noted in Other Cases 1 and 2 of the Start Gen bit). If an address is loaded into the data register and this bit is set prior to NAKing (Master receiver) or resetting the transmit bit (Master transmitter), or after a Master transmitter is NAKed by the slave, a Restart condition is generated followed by the transmission of the address byte.

Bit 0: Start Gen. Before setting this bit, firmware must write the address byte to send into the I2C_DR register. When this bit is set, the Start condition is generated followed immediately by the transmission of the address byte. (No control in the I2C_SCR register is needed for the master to initiate a transmission; the direction is inherently “transmit.”) The bit is automatically reset to ‘0’ after the Start has been generated.

There are three possible outcomes as a result of setting the Start Gen bit.

1. The bus is free and the Start condition is generated successfully. A Byte Complete interrupt is generated after the Start and the address byte are transmitted. If the address was ACKed by the receiver, the firmware may then proceed to send data bytes.
2. The Start command is too late. Another master in a multi-master environment has generated a valid Start and the bus is busy. The resulting behavior depends upon whether Slave mode is enabled.
   - ❒ Slave mode is enabled: A Start and address byte interrupt is generated. When reading the I2C_MSCR register, the master will see that the Start Gen bit is still set and that the I2C_SCR register has the Address bit set, indicating that the block is addressed as a slave.
   - ❒ Slave mode is not enabled: The Start Gen bit will remain set and the Start is queued, until the bus becomes free and the Start condition is subsequently generated. An interrupt is generated at a later time, when the Start and address byte has been transmitted.
3. The Start is generated, but the master looses arbitration to another master in a multi-master environment. The resulting behavior depends upon whether Slave mode is enabled.
   - ❒ Slave mode is enabled: A Start and address byte interrupt is generated. When reading the I2C_MSCR, the master will see that the Start Gen bit cleared, indicating that the Start was generated. However, the Lost Arb bit is set in the I2C_SCR register. The Address status is also set, indicating that the block has been addressed as a slave. The firmware may then ACK or NAK the address to continue the transfer.
   - ❒ Slave mode is not enabled: A Start and address byte interrupt is generated. The Start Gen bit is cleared and the Lost Arb bit is set. The hardware will wait for command input, stalling the bus if necessary. In this case, the master will clear the I2C_SCR register, to release the bus and allow the transfer to continue, and the block will idle.

Other cases where the Start bit may be used to generate a Start condition are as follows.

1. When a master is finished with a transfer, a NAK is written to the I2C_SCR register (in the case of the Master receiver) or the transmit bit is cleared (in case of a Master transmitter). Normally, the action will free the stall and generate a Stop condition. However, if the Start bit is set and an address is written into the data register prior to the I2C_SCR write, a Stop, followed immediately by a Start (minimum bus free time), is generated. In this way, messages may be chained.
2. When a Master transmitter is NAKed, an automatic Stop condition is generated on the subsequent I2C_SCR write. However, if the Start Gen bit has previously been set, the Stop is immediately followed by a Start condition.

Table 28-6. I2C_MSCR Master Status/Control Register

Bit	Access	Description	Mode
3	R	Bus Busy This bit is set to ‘1’ when any Start condition is detected and reset to ‘0’ when a Stop condition is detected.	Master Only
2	R	Master Mode This bit is set to ‘1’ when a start condition, generated by this block, is detected and reset to ‘0’ when a stop condition is detected.	Master Only
1	RW	Restart Gen 1 = Generate a Restart condition. This bit is cleared by hardware when the Start generation is complete.	Master Only
0	RW	Start Gen 1 = Generate a Start condition and send a byte (address) to the I²C bus. This bit is cleared by hardware when the Start generation is complete.	Master Only

For additional information, refer to the I2Cx_MSCR register on page 198.

28.4 PSoC Device Distinctions

The CY8C28x03, CY8C28x23, CY8C28x43, and CY8C28x45 have two I2C blocks. The rest of the CY8C28xxx devices have only one.

28.5 Timing Diagrams

28.5.1 Clock Generation

Figure 28-5 illustrates the I2C input clocking scheme. The SYSCLK pin is an input into a four-stage ripple divider that provides the baud rate selections. When the block is disabled, all internal state is held in a reset state. When either the Master or Slave Enable bits in the I2C_CFG register are set, the reset is synchronously released and the clock generation is enabled. Two taps from the ***ripple divider*** are selectable (/4, /16) from the clock rate bits in the I2C_CFG register. If any of the two divider taps is selected, that clock is resynchronized to SYSCLK. The resulting clock is routed to all of the synchronous elements in the design.

Figure 28-5. I2C Input Clocking

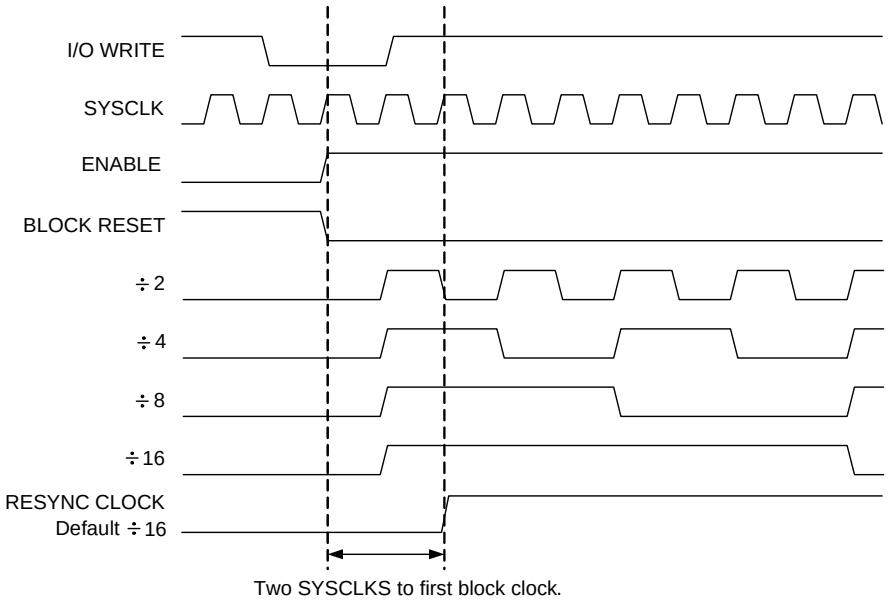

28.5.2 Basic Input/Output Timing

Figure 28-6 illustrates basic input output timing that is valid for both 16 times sampling and 32 times sampling. For 16 times sampling, N = 4; and for 32 times sampling, N = 12. N is derived from the half-bit rate sampling of eight and 16 clocks, respectively, minus the input latency of three (count of 4 and 12 correspond to 5 and 13 clocks).

Figure 28-6. Basic Input/Output Timing

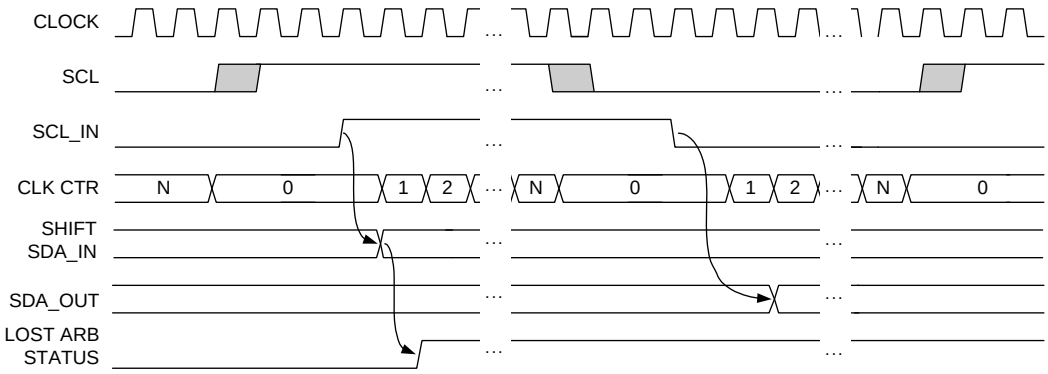

28.5.3 Status Timing

Figure 28-7 illustrates the interrupt timing for Byte Complete, which occurs on the positive edge of the ninth clock (byte + ACK/NAK) in Transmit mode and on the positive edge of the eighth clock in Receive mode. There is a maximum of three cycles of latency, due to the input synchronizer/filter circuit. As shown, the interrupt occurs on the clock following a valid SCL positive edge input transition (after the synchronizers). The Address bit is set with the same timing, but only after a slave address has been received. The LRB (Last Received Bit) status is also set with the same timing, but only on the ninth bit after a transmitted byte.

Figure 28-7. Byte Complete, Address, LRB Timing

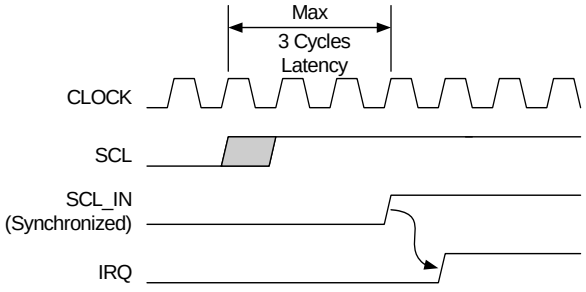

Transmit: Ninth positive edge SCL
Receive: Eighth positive edge SCL

Figure 28-8 shows the timing for Stop Status. This bit is set (and the interrupt occurs) two clocks after the synchronized and filtered SDA line transitions to a '1', when the SCL line is high.

Figure 28-8. Stop Status and Interrupt Timing

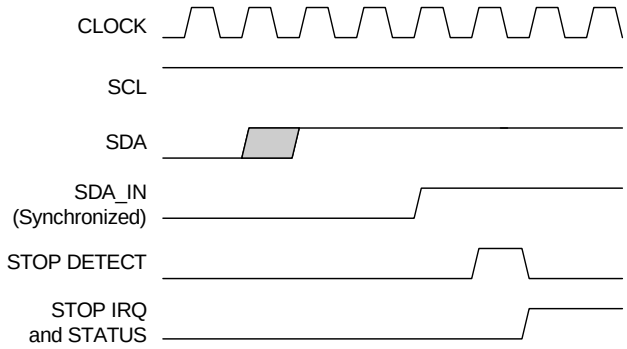

Figure 28-9 illustrates the timing for bus error interrupts. Bus Error status (and Interrupt) occurs one cycle after the internal Start or Stop Detect (two cycles after the filtered and synced SDA input transition).

Figure 28-9. Bus Error Interrupt Timing

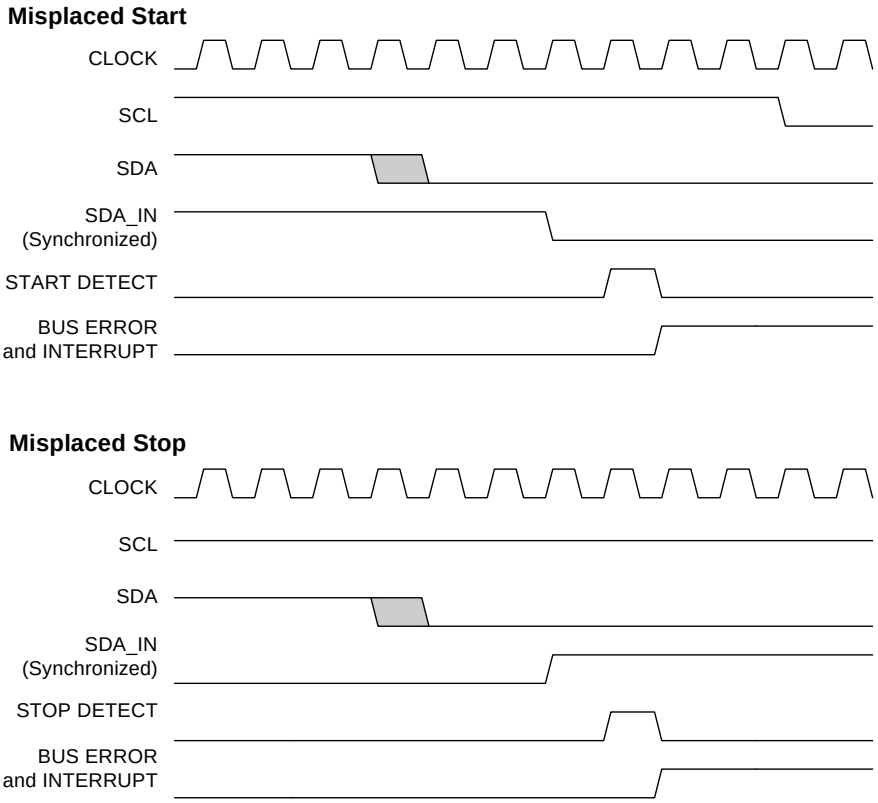

28.5.4 Master Start Timing

When firmware writes the Start Gen command, hardware resynchronizes this bit to SYSCLK, to ensure a minimum of a full SYSCLK of setup time to the next clock edge. When the Start is initiated, the SCL line is left high for 6/14 clocks (corresponding to 16/32 times sampling rates). During this initial SCL high period, if an external Start is detected, the Start sequence is aborted and the block returns to an IDLE state. However, on the next Stop detection, the block will automatically initiate a new Start sequence.

Figure 28-10. Basic Master Start Timing

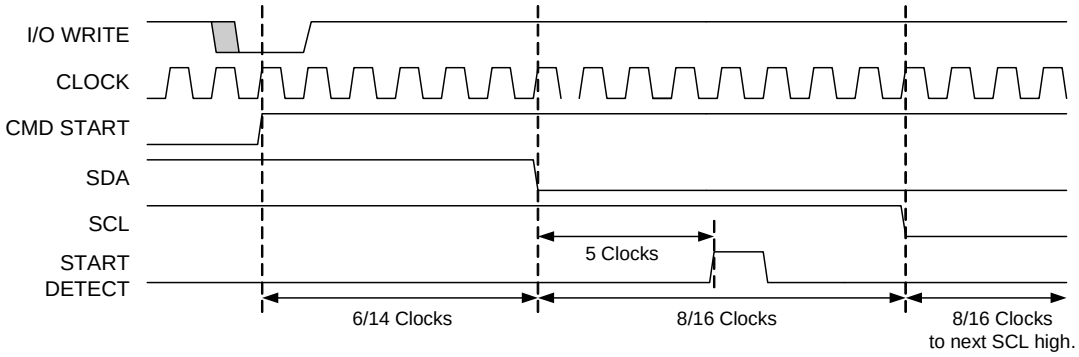

Figure 28-11. Start Timing with a Pending Start

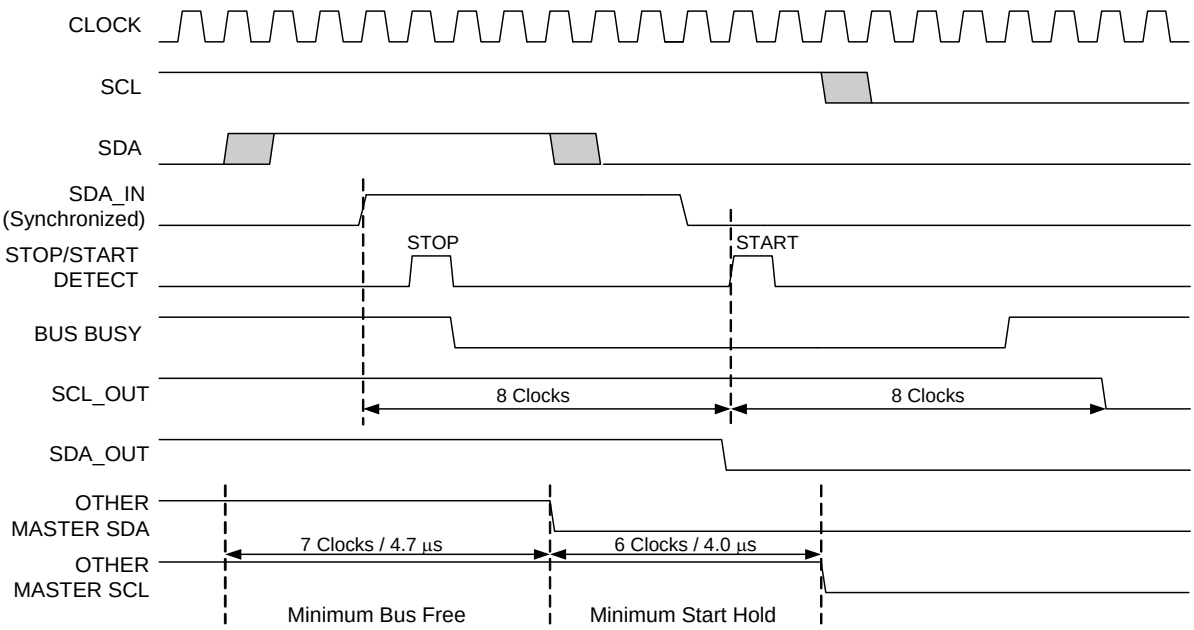

Figure 28-12. Master Stop/Start Chaining

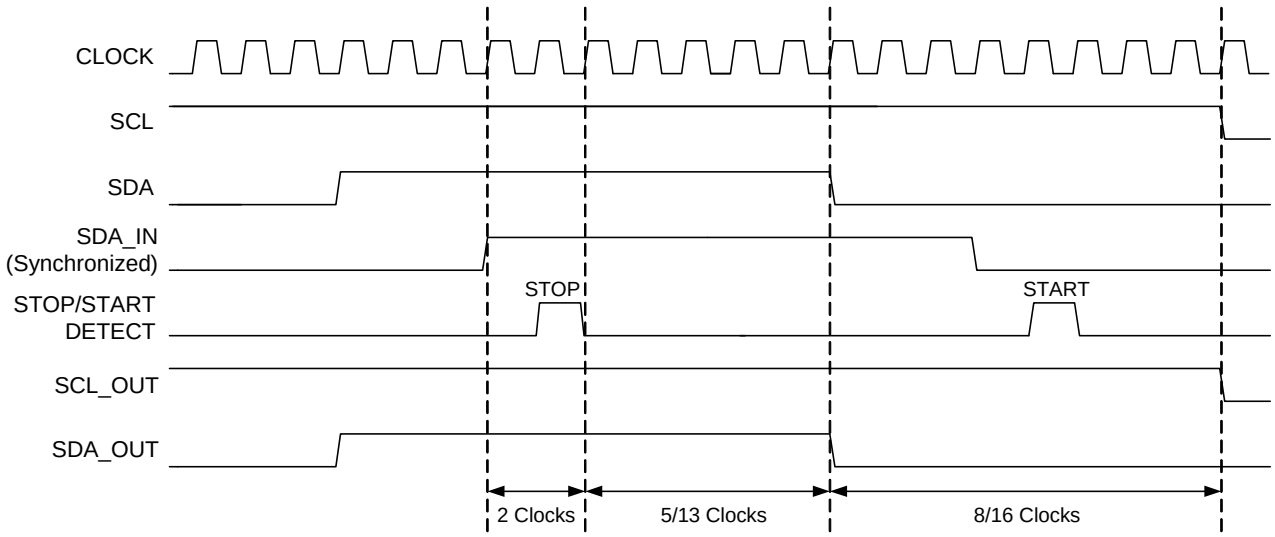

28.5.5 Master Restart Timing

Figure 28-13 shows the Master Restart timing. After the ACK/NAK bit, the clock is held low for a half bit time (8/16 clocks corresponding to the 16 or 32 times sampling rates), during which time the data is allowed to go high, then a valid start is generated in the following 3 half bit times as shown.

Figure 28-13. Master Restart Timing

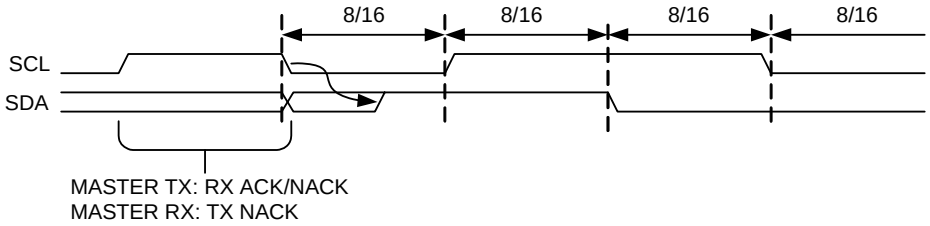

28.5.6 Master Stop Timing

Figure 28-14 shows basic Master Stop timing. To generate a Stop, the SDA line is first pulled low, in accordance with the basic SDA output timing. Then, after the full low of SCL is completed and the SCL line is pulled high, the SDA line remains low for a full one-half bit time before it is pulled high to signal the Stop.

Figure 28-14. Master Stop Timing

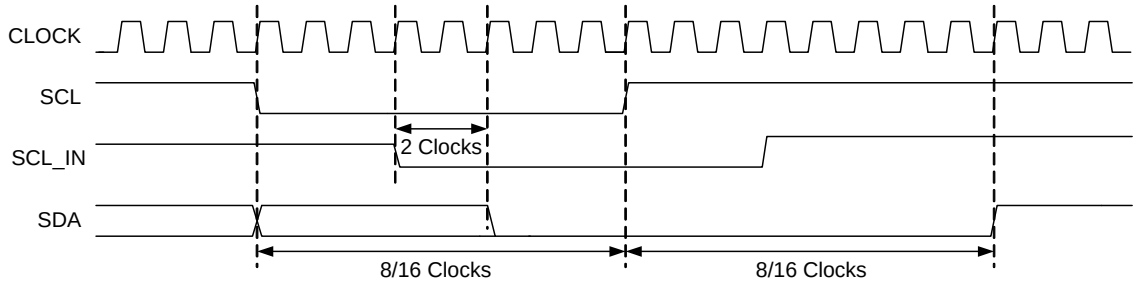

28.5.7 Master/Slave Stall Timing

When a Byte Complete interrupt occurs, the PSoC device firmware must respond with a write to the I2C_SCR register to continue the transfer (or terminate the transfer). The interrupt occurs two clocks after the rising edge of SCL_IN (see "Status Timing" on page 505). As illustrated in Figure 28-15, firmware has until one clock after the falling edge of SCL_IN to write to the I2C_SCR register; otherwise, a stall occurs. When stalled, the I/O write releases the stall. The setup time between data output and the next rising edge of SCL will always be N – 1 clocks.

Figure 28-15. Master/Slave Stall Timing

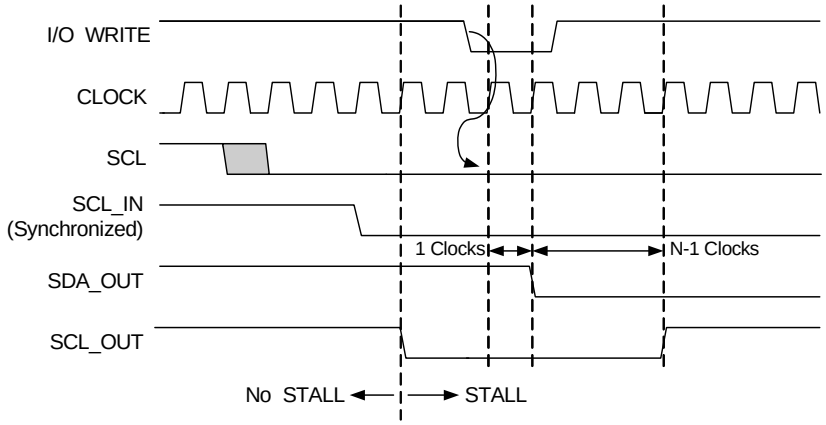

28.5.8 Master Lost Arbitration Timing

Figure 28-16 shows a Lost Arbitration sequence. When contention is detected at the input (SDA_IN) sampling point, the SDA output is immediately released to an IDLE state. However, the master continues clocking until the Byte Complete interrupt, which is processed in the usual way. Any write to the I2C_SCR register results in the master reverting to an IDLE state, one clock after the next positive edge of the SCL_IN clock.

Figure 28-16. Lost Arbitration Timing (Transmitting Address or Data)

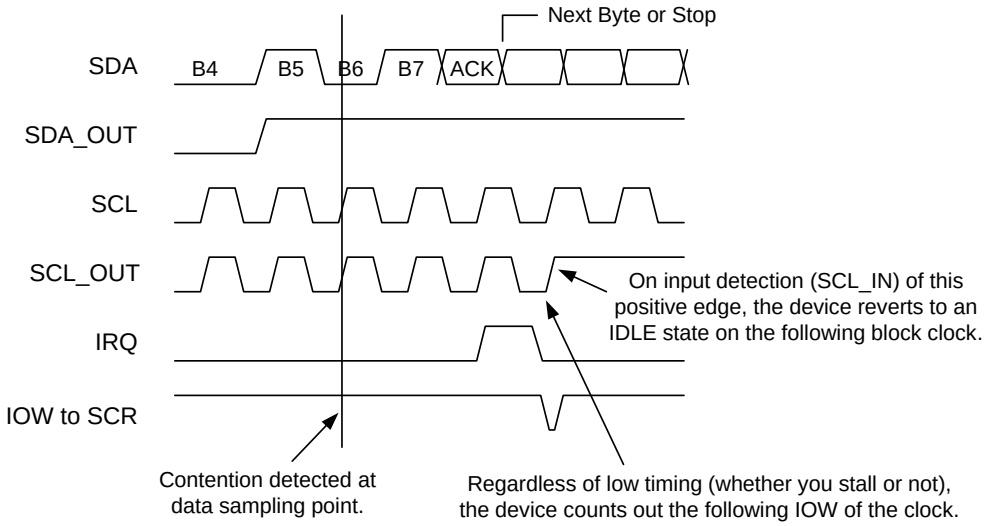

28.5.9 Master Clock Synchronization

Figure 28-17 shows the timing associated with Master Clock Synchronization. Clock synchronization is always operational, even if it is the only master on the bus. In which case, it is synchronizing to its own clock. In the wired AND bus, an SCL output of ‘0’ is seen by all masters. When the hardware asserts a ‘0’ to the output, it is immediately fed back from the PSoC device pin to the input synchronizer for the SCL input. The counter value (depending on the sampling rate) takes into account the worst case latency for input synchronization of three clocks, giving a net period of 8/16 clocks for both high and low time. This results in an overall clocking rate of 16/32 clocks per bit.

In multi-master environments when the hardware outputs a ‘1’ on the SCL output, if any other master is still asserting a ‘0’, the clock counter will hold until the SCL input line matches the ‘1’ on the SCL output line. When matched, the remainder of the high time is counted down. In this way, the master with the fastest frequency determines the high time of the clock and the master with the lowest frequency determines the low time of the clock.

Figure 28-17. Master Clock Synchronization

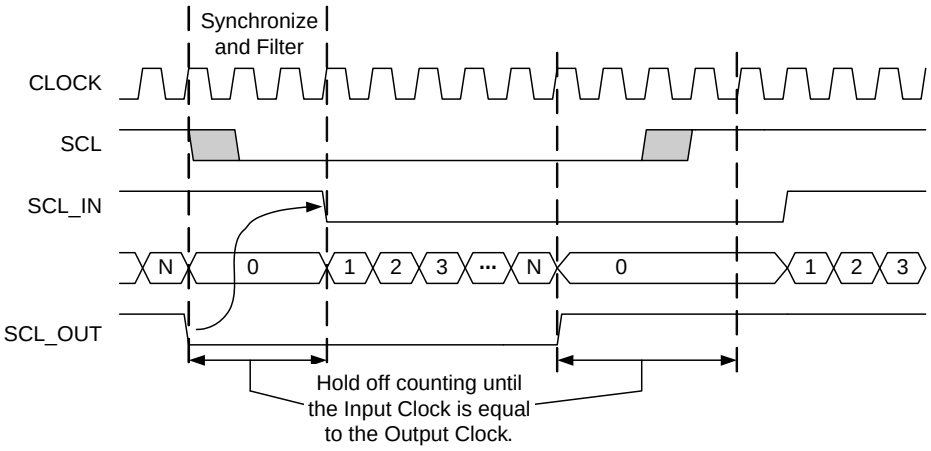

29. Internal Voltage Reference

This chapter discusses the Internal Voltage Reference and its associated register. The internal voltage reference provides an absolute value of 1.3 V to a variety of subsystems in the PSoC device. For a quick reference of all PSoC® registers in address order, refer to the Register Details chapter on page 125.

29.1 Architectural Description

The Internal Voltage Reference is made up of two blocks: a bandgap voltage generator and a buffer with sample and hold. The bandgap voltage generator is a typical (V_{BE} + K V_T) design.

The buffer circuit provides gain to the 1.20 V bandgap voltage, to produce a 1.30 V reference. A simplified ***schematic*** is illustrated in Figure 29-1. The connection between amplifier and capacitor is made through a CMOS switch, allowing the reference voltage to be used by the system while the reference circuit is powered down. The voltage reference is trimmed to 1.30 V at room temperature.

A temperature proportional voltage is also produced in this block for use in temperature sensing.

Figure 29-1. Voltage Reference Schematic

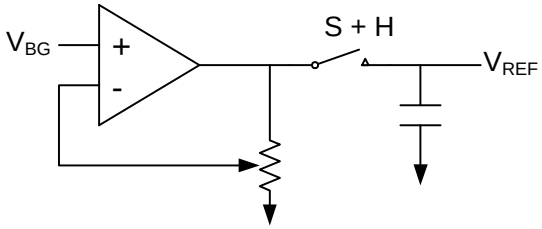

29.2 Register Definitions

The following register is associated with the Internal Voltage Reference. The Internal Voltage Reference is trimmed for gain and temperature coefficient using the BDG_TR register. The register description below has an associated register table showing the bit structure. The bits that are grayed out in the table are reserved bits and are not detailed in the register description that follows. Reserved bits should always be written with a value of '0'.

29.2.1 BDG_TR Register

Add.	Name	Cols.	Bit 7	Bit 6	Bit 5	Bit 4	Bit 3	Bit 2	Bit 1	Bit 0	Access
1,EAh	BDG_TR	4, 2		AGNDBYP	TC[1:0]		V[3:0]				RW : 00

The Bandgap Trim Register (BDG_TR) is used to adjust the bandgap and add an RC filter to AGND.

Depending on how many analog columns your PSoC device has (see the Cols. column in the register table above), only certain bits are accessible to be read or written.

Bit 6: AGNDBYP. When set, this bit adds an RC filter to AGND. (R is an internal 8.1K resistor and C is external to the PSoC device on P2[4].)

Bits 5 and 4: TC[1:0]. These bits are for setting the temperature coefficient inside the bandgap voltage generator. 10b is the design center for '0' TC.

It is strongly recommended that the user not alter the value of these bits.

Bits 3 to 0: V[3:0]. These bits are for setting the gain in the reference buffer. Sixteen steps of 4 mV are available. 1000b is the design center for 1.30 V.

It is strongly recommended that the user not alter the value of these bits.

For additional information, refer to the BDG_TR register on page 305.

30. System Resets

This chapter discusses the System Resets and their associated registers. PSoC® devices support several types of resets. The various resets are designed to provide error-free operation during power up for any voltage ramping profile, to allow for user-supplied external reset and to provide recovery from errant code operation. For a complete table of the System Reset registers, refer to the "Summary Table of the System Resource Registers" on page 462. For a quick reference of all PSoC registers in address order, refer to the Register Details chapter on page 125.

30.1 Architectural Description

When reset is initiated, all registers are restored to their default states. In the Register Details chapter on page 125, this is indicated by the POR column in the register tables and elsewhere it is indicated in the Access column, values on the right side of the colon, in the register tables. Minor exceptions are explained here.

The following types of resets can occur in the PSoC device:

- Power on Reset (POR). This occurs at low supply voltage and is comprised of multiple sources.
- External Reset (XRES). This active high reset is driven into the PSoC device, on parts that contain an XRES pin.
- Watchdog Reset (WDR). This optional reset occurs when the watchdog timer expires, before being cleared by user firmware. Watchdog reset defaults to off.
- Internal Reset (IRES). This occurs during the boot sequence, if the SROM code determines that Flash reads are not valid.

The occurrence of a reset is recorded in the Status and Control registers (CPU_SCR0 for POR, XRES, and WDR) or in the System Status and Control Register 1 (CPU_SCR1 for IRESS). Firmware can interrogate these registers to determine the cause of a reset.

30.2 Pin Behavior During Reset

Power on Reset and External Reset cause toggling on two GPIO pins, P1[0] and P1[1], as described here and illustrated in Figure 30-1 and Figure 30-2. This allows programmers to synchronize with the PSoC device. All other GPIO pins are placed in a high impedance state during and immediately following reset.

30.2.1 GPIO Behavior on Power Up

At power up, the internal POR causes P1[0] to initially drive a strong high (1) while P1[1] drives a resistive low (0). After 256 sleep oscillator cycles (approximately 8 ms), the P1[0] signal transitions to a resistive low state. After additional 256 sleep oscillator clocks, both pins transition to a high impedance state and normal CPU operation begins. This is illustrated in Figure 30-1.

Figure 30-1. P1[1:0] Behavior on Power Up

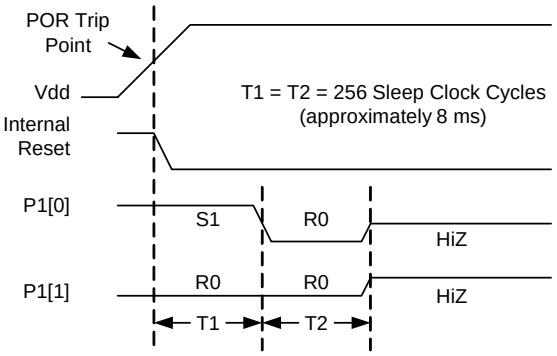

30.2.2 GPIO Behavior on External Reset

During External Reset (XRES = 1), both P1[0] and P1[1] drive resistive low (0). After XRES deasserts, these pins continue to drive resistive low for another 8 sleep clock cycles (approximately 200 µs). After this time, both pins transition to a high impedance state and normal CPU operation begins. This is illustrated in Figure 30-2.

Figure 30-2. P1[1:0] Behavior on External Reset (XRES)

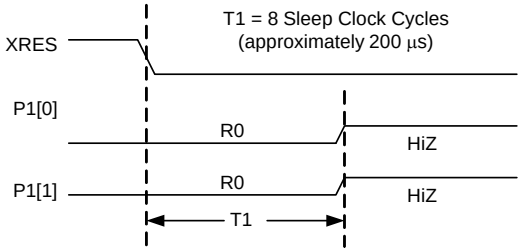

30.3 Register Definitions

The following registers are associated with the PSoC System Resets and are listed in address order. Each register description has an associated register table showing the bit structure for that register. The bits in the tables that are grayed out are reserved bits and are not detailed in the register descriptions that follow. Reserved bits should always be written with a value of ‘0’. For a complete table of system reset registers, refer to the “Summary Table of the System Resource Registers” on page 462.

30.3.1 CPU_SCR1 Register

Address	Name	Bit 7	Bit 6	Bit 5	Bit 4	Bit 3	Bit 2	Bit 1	Bit 0	Access
x,FEh	CPU_SCR1	IRESS			SLIMO	ECO EXW	ECO EX		IRAMDIS	# : 00

LEGEND
x An “x” before the comma in the address field indicates that this register can be read or written to no matter what bank is used.
Access is bit specific. Refer to the Register Details chapter on page 125 for additional information.

The System Status and Control Register 1 (CPU_SCR1) is used to convey the status and control of events related to internal resets and watchdog reset.

Bit 7: IRESS. The Internal Reset Status bit is a read only bit that may be used to determine if the booting process occurred more than once.

When this bit is set, it indicates that the SROM SWBootReset code was executed more than once. If this bit is not set, the SWBootReset was executed only once. In either case, the SWBootReset code will not allow execution from code stored in Flash until the M8C Core is in a safe operating mode with respect to supply voltage and Flash operation. There is no need for concern when this bit is set. It is provided for systems which may be sensitive to boot time, so that they can determine if the normal one-pass boot time was exceeded. For more information on the SWBootReest code see the Supervisory ROM (SROM) chapter on page 49.

Bit 4: SLIMO. When set, the Slow IMO bit allows the active power dissipation of the PSoC device to be reduced by slowing down the IMO from 24 MHz to 6 MHz. The IMO trim value must also be changed when SLIMO is set (see “Engaging Slow IMO” on page 81). When not in external clocking mode, the IMO is the source for SYSCLK; therefore, when the speed of the IMO changes, so will SYSCLK.

Bit 3: ECO EXW. The ECO Exists Written bit is used as a status bit to indicate that the ECO EX bit has been previously written to. It is read only. When this bit is a ‘1’, this indicates that the CPU_SCR1 register has been written to and is now locked. When this bit is a ‘0’, the register has not been written to since the last reset event.

Bit 2: ECO EX. The ECO Exists bit serves as a flag to the hardware, to indicate that an external crystal ***oscillator*** exists in the system. Just after boot, it may be written *only once* to a value of ‘1’ (crystal exists) or ‘0’ (crystal does not exist). If the bit is ‘0’, a switch-over to the ECO is locked out by hardware. If the bit is ‘1’, hardware allows the firmware to freely switch between the ECO and ILO. It should be written as early as possible after a ***Power On Reset (POR)*** or ***External Reset (XRES)*** event, where it is assumed that program execution integrity is high.

Bit 0: IRAMDIS. The Initialize RAM Disable bit is a control bit that is readable and writeable. The ***default value*** for this bit is ‘0’, which indicates that the maximum amount of SRAM should be initialized on watchdog reset to a value of 00h. When the bit is ‘1’, the minimum amount of SRAM is initialized after a watchdog reset. For more information on this bit, see the “SROM Function Descriptions” on page 50.

For additional information, refer to the CPU_SCR1 register on page 216.

30.3.2 CPU_SCR0 Register

Address	Name	Bit 7	Bit 6	Bit 5	Bit 4	Bit 3	Bit 2	Bit 1	Bit 0	Access
0,FFh	CPU_SCR0	GIES		WDRS	PORS	Sleep			STOP	# : XX

LEGEND
Access is bit specific. Refer to register detail for additional information.
XX The reset value is 10h after POR/XRES and 20h after a watchdog reset.

The System Status and Control Register 0 (CPU_SCR0) is used to convey the status and control of events for various functions of a PSoC device.

Bit 7: GIES. The Global Interrupt Enable Status bit is a read only status bit and its use is discouraged. The GIES bit is a legacy bit which was used to provide the ability to read the GIE bit of the CPU_F register. However, the CPU_F register is now readable. When this bit is set, it indicates that the GIE bit in the CPU_F register is also set which, in turn, indicates that the microprocessor will service interrupts.

Bit 5: WDRS. The WatchDog Reset Status bit may not be set. It is normally '0' and automatically set whenever a watchdog reset occurs. The bit is readable and clearable by writing a zero to its bit position in the CPU_SCR0 register.

Bit 4: PORS. The Power On Reset Status (PORS) bit, which is the watchdog enable bit, is set automatically by a POR or External Reset (XRES). If the bit is cleared by user code, the watchdog timer is enabled. When cleared, the only way to reset the PORS bit is to go through a POR or XRES. Thus, there is no way to disable the watchdog timer, other than to go through a POR or XRES.

Bit 3: Sleep. The Sleep bit is used to enter Low Power Sleep mode when set. To wake up the system, this register bit is cleared asynchronously by any enabled interrupt. There are two special features of this register bit that ensures proper Sleep operation. First, the write to set the register bit is blocked, if an interrupt is about to be taken on that instruction boundary (immediately after the write). Second, there is a hardware interlock to ensure that, when set, the sleep bit may not be cleared by an incoming interrupt until the sleep circuit has finished performing the sleep sequence and the system-wide power down signal has been asserted. This prevents the sleep circuit from being interrupted in the middle of the process of system power down, possibly leaving the system in an indeterminate state.

Bit 0: STOP. The STOP bit is readable and writeable. When set, the PSoC M8C will stop executing code until a reset event occurs. This can be either a POR, WDR, or XRES. If an application wants to stop code execution until a reset, the preferred method is to use the HALT instruction rather than a register write to this bit.

For additional information, refer to the CPU_SCR0 register on page 217.

30.4 Timing Diagrams

30.4.1 Power On Reset

A Power on Reset (POR) is triggered whenever the supply voltage is below the POR trip point. POR ends when the supply voltage rises above this voltage. Refer to the POR and LVD chapter on page 523 for more information on the operation of the POR block.

POR consists of two pieces: an imprecise POR (IPOR) and a Precision POR (PPOR). “POR” refers to the OR of these two functions. IPOR has coarser accuracy and its trip point is typically lower than PPOR’s trip point. PPOR is derived from a circuit that is calibrated (during boot), for a very accurate location of the POR trip point.

During POR (POR=1), the IMO is powered off for low power during start-up. After POR deasserts, the IMO is started (see Figure 30-4).

POR configures register reset status bits as shown in Table 30-1. PPOR does not affect the BandGap Trim register (BDG_TR), but IPOR does reset this register.

30.4.2 External Reset

An External Reset (XRES) is caused by pulling the XRES pin high. The XRES pin has an always-on, pull down resistor, so it does not require an external pull down for operation and can be tied directly to ground or left open. Behavior after XRES is similar to POR.

During XRES (XRES = 1), the IMO is powered off for low power during start-up. After XRES deasserts, the IMO is started (see Figure 30-4). How the XRES configures register reset status bits is shown in Table 30-1.

30.4.3 Watchdog Timer Reset

The user has the option to enable the Watchdog Timer Reset (WDR), by clearing the PORS bit in the CPU_SCR0 register. When the PORS bit is cleared, the watchdog timer cannot be disabled. The only exception to this is if a POR/XRES event takes place, which will disable the WDR. Note that a WDR does not clear the Watchdog timer. See “Watchdog Timer” on page 107 for details of the Watchdog operation.

When the watchdog timer expires, a watchdog event occurs resulting in the reset sequence. Some characteristics unique to the WDR are as follows.

- PSoC device reset asserts for one cycle of the CLK32K clock (at its reset state).
- The IMO is not halted during or after WDR (that is, the part does not go through a low power phase).
- CPU operation restarts one CLK32K cycle after the internal reset deasserts (see Figure 30-3).

How the WDR configures register reset status bits is shown in Table 30-1.

Figure 30-3. Key Signals During WDR and IRES

WDR: Reset 1 cycle, then one additional cycle before the CPU reset is released.

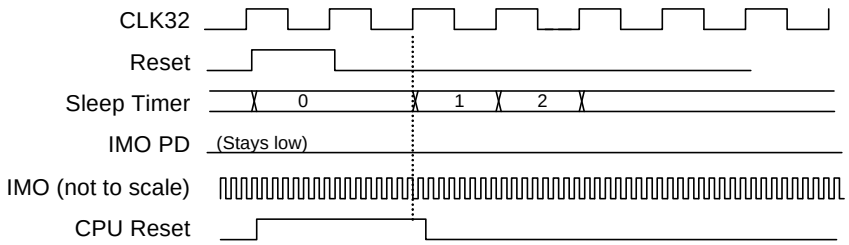

IRES: Reset 1 cycle, then 2048 additional cycles low power hold-off, and then 1 cycle with IMO on before the CPU reset is released.

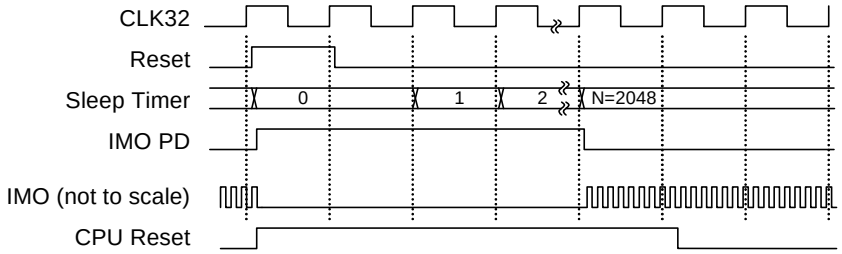

Figure 30-4. Key Signals During POR and XRES

POR (IPOR followed by PPOR): Reset while POR is high (IMO off), then 511(+) cycles (IMO on), and then the CPU reset is released. **XRES** is the same, with N=8.

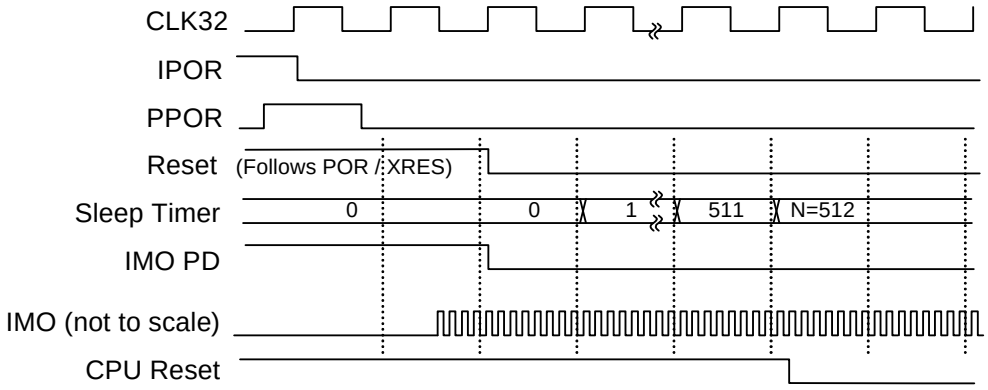

PPOR (with no IPOR): Reset while PPOR is high and to the end of the next 32K cycle (IMO off); 1 cycle IMO on before the CPU reset is released. Note that at the 5V level, PPOR will tend to be brief, because the reset clears the POR range register (VLT_CR) back to the default 3V setting.

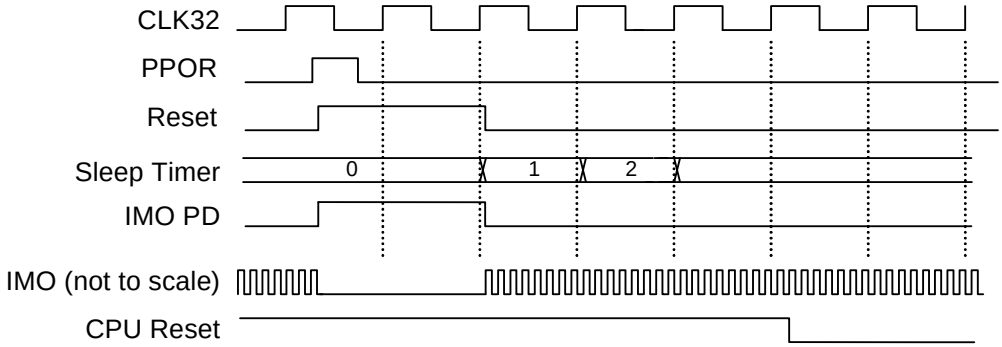

XRES: Reset while XRES is high (IMO off), then 7(+) cycles (IMO on), and then the CPU reset is released.

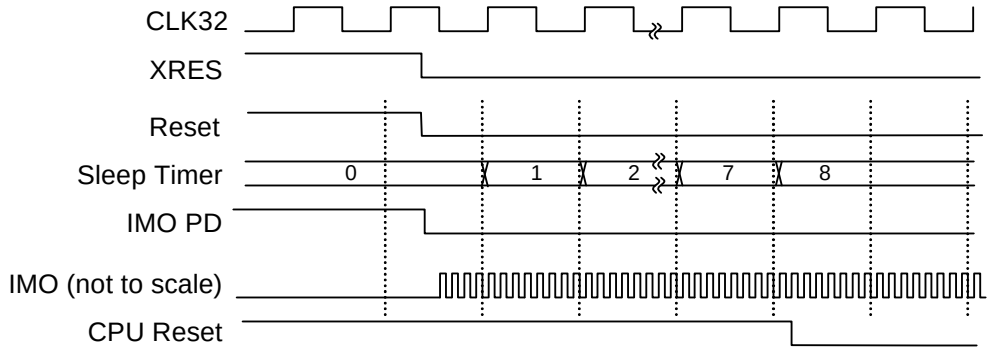

30.4.4 Reset Details

Timing and functionality details are summarized in Table 30-1. Figure 30-4 shows some of the relevant signals for IPOR, PPOR, and XRES, while Figure 30-3 shows signaling for WDR and IRES.

Table 30-1. Details of Functionality for Various Resets

Item	IPOR (Part of POR)	PPOR (Part of POR)	XRES	WDR
Reset Length	While POR = 1	While PPOR = 1, plus 30-60 µs (1-2 clocks)	While XRES = 1	30 µs (1 clock)
Low Power (IMO Off) During Reset?	Yes	Yes	Yes	No
Low Power Wait Following Reset?	No	No	No	No
CLK32K Cycles from End of Reset to CPU Reset Deasserts[a]	512	1	8	1
Register Reset (See next line for CPU_SCR0, CPU_SCR1)	All	All, except PPOR does not reset Bandgap Trim register	All	All
Reset Status Bits in CPU_SCR0, CPU_SCR1	Set PORS, Clear WDRS, Clear IRAMDIS	Set PORS, Clear WDRS, Clear IRAMDIS	Set PORS, Clear WDRS, Clear IRAMDIS	Clear PORS, Set WDRS, IRAMDIS unchanged
Bandgap Power	On	On	On	On
Boot Time[b]	2.2 ms	2.2 ms	2.2 ms	2.2 ms

a. CPU reset is released after synchronization with the CPU Clock.
b. Measured from CPU reset release to execution of the code at Flash address 0x0000.

30.5 Power Consumption

The ILO block drives the CLK32K clock used to time most events during the reset sequence. This clock is powered down by IPOR, but not by any other reset. The sleep timer provides interval timing.

While POR or XRES assert, the IMO is powered off to reduce start-up power consumption.

During and following IRES (for 64 ms nominally), the IMO is powered off for low average power during slow supply ramps.

During and after POR or XRES, the bandgap circuit is powered up.

Following IRES, the bandgap circuit is only powered up occasionally, to refresh the sampled bandgap voltage value. This sampling follows the same process used during sleep mode.

The IMO is always on for at least one CLK32K cycle, before CPU reset is deasserted.

31. Switch Mode Pump (SMP)

This chapter explains the Switch Mode Pump (SMP) and its associated register. Using only a few external components, the SMP will pump a battery voltage up to a configurable stable operating voltage. Refer to the table titled "Availability of System Resources for CY8C28xxx Devices" on page 461 for SMP availability by PSoC® part number. For a quick reference of all PSoC registers in address order, refer to the Register Details chapter on page 125.

31.1 Architectural Description

The SMP circuit can be used to generate typical operating supply voltages off a single battery cell. During the time Vdd is ramping from 0 V to VPPOR (2.921 V typical), ***integrated circuit (IC)*** operation is held off by the POR circuit and the SMP circuit is forced on. The pump is realized by connecting an external inductor between V_{BAT} and the SMP pin, with an external diode pointing from the SMP pin to the Vdd pin. A bypass capacitor of at least 0.1 µF must be connected between Vdd and Vss. The inductor is charged when the internal SMP switch is on. When this switch is turned off, a Flyback mode occurs and the inductor energy is released into the bypass capacitor. This is done in a periodic fashion (1.3 MHz), charging the capacitor until the SMP is commanded to turn off by the PORBOUT circuit. Vdd is pumped to a voltage level specified in the Voltage Monitor Control register (VLT_CR[2:0]). The SMP supports V_{BAT} values down to 1.0 V during operation, but a start-up is not guaranteed for battery voltages below 1.1 V. When the PSoC device is enabled after its power up and boot sequence, firmware can disable the SMP function by writing VLT_CR[7] to a '1'.

Figure 31-1. Example Switch Mode Pump for a 20-Pin PSoC Device

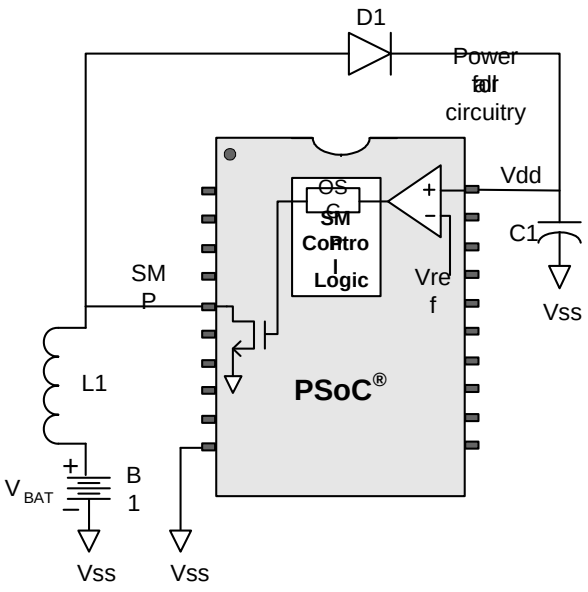

31.2 Application Description

When the PSoC device is put into Sleep mode, the SMP remains running to maintain voltage. This may result in higher than specification sleep current, depending upon the application. If the user desires, the pump may be disabled during precision measurements (such as analog-to-digital conversions) and then re-enabled (writing SMP bit 7 to ‘1’ and then back to ‘0’). However, the user is responsible for making the operation happen quickly enough to guarantee supply holdup (by the bypass capacitor, C1) sufficient for continued operation.

31.2.1 Component Value Selection

This section discusses some general guidelines for selecting components for the SMP. For more information, refer to the PSoC Application Note 2097 on the web at http://www.cypress.com/psoc.

Inductor. The inductor value determines how much load current can be supplied by the SMP. Efficiency of the SMP is also affected by the inductor. In general, a larger inductor provides a higher efficiency. The following efficiency and load curves are based on silicon test results.

Figure 31-2. Typical Efficiency Values at Room Temperature

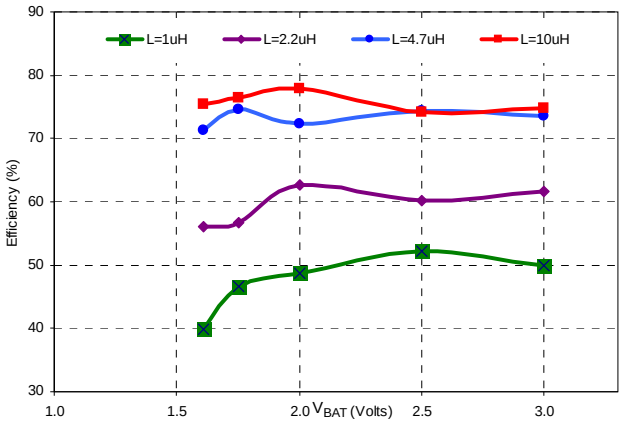

Figure 31-3. Typical Values of Maximum Load Current

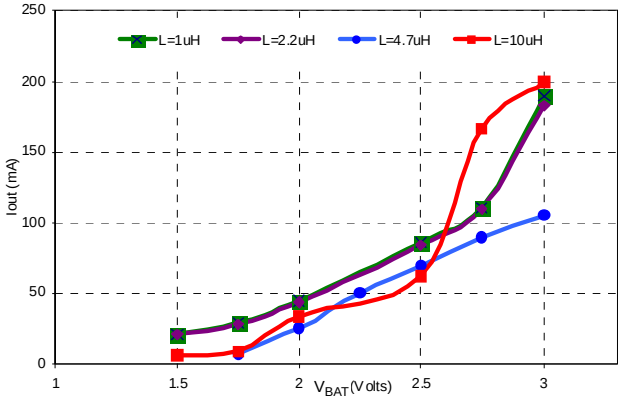

Capacitor. The choice of capacitor at the Vdd node determines the ripple and hold time at the output voltage. A typical capacitor value is 10 µF.

Diode. Schottky diodes are recommended because they have a low forward voltage drop and fast switching speed.

31.3 Register Definitions

The following register is associated with the Switch Mode Pump (SMP). The register description below has an associated register table showing the bit structure of the register. The bit in the table that is grayed out is a reserved bit and is not detailed in the register description. Reserved bits should always be written with a value of ‘0’.

31.3.1 VLT_CR Register

Address	Name	Bit 7	Bit 6	Bit 5	Bit 4	Bit 3	Bit 2	Bit 1	Bit 0	Access
1,E3h	VLT_CR	SMP		PORLEV[1:0]		LVDTBEN	VM[2:0]			RW : 00

The Voltage Monitor Control Register (VLT_CR) is used to set the trip points for POR, LVD, and the supply pump.

The VLT_CR register is cleared by all resets, which can cause reset cycling during very slow supply ramps to 5 V when the POR range is set for the 5-V range. This is because the reset clears the POR range setting back to 3 V and a new boot/start-up occurs (possibly many times). The user can manage this with Sleep mode and/or reading voltage status bits, if such cycling is an issue.

Bit 7: SMP. This bit controls whether or not the SMP will turn on when the supply (Vdd) voltage has dropped below the trip point set by VM[2:0]. The SMP is enabled when the SMP bit is ‘0’. Thus, the SMP is on by default. If this bit is set to ‘1’ the SMP will not turn on regardless of the supply voltage level.

Bits 5 and 4: PORLEV[1:0]. These bits set the Vdd level at which PPOR switches to one of three valid values. Note that 11b is a reserved value and therefore should not be used. The three valid settings for these bits are:

- 00b (2.9 V operation)
- 01b (4.4 V operation)
- 10b (4.65 V operation)

See the “DC POR and LVD Specifications” table in the Electrical Specifications section of the PSoC device data sheet for voltage tolerances for each setting.

Bit 3: LVDTBEN. This bit is ANDed with LVD to produce a throttle-back signal that reduces CPU clock speed, when low voltage conditions are detected. When the Throttle-Back signal is asserted, the CPU speed bits in the OSC_CR0 register are reset, forcing the CPU speed to 3 MHz or EXTCLK / 8.

Bits 2 to 0: VM[2:0]. These bits set the Vdd level at which LVD and the Pump Comparator switches.

See the “DC POR and LVD Specifications” table in the Electrical Specifications section of the PSoC device data sheet for voltage tolerances for each setting.

For additional information, refer to the VLT_CR register on page 299.

32. POR and LVD

This chapter briefly discusses the POR and LVD circuits and their associated registers. For a complete table of the POR and LVD registers, refer to the "Summary Table of the System Resource Registers" on page 462. For a quick reference of all PSoC® registers in address order, refer to the Register Details chapter on page 125.

32.1 Architectural Description

The Power on Reset (POR) and Low Voltage Detect (LVD) circuits provide protection against low voltage conditions. The POR function senses Vdd and holds the system in reset until the magnitude of Vdd will support operation to specification. The LVD function senses Vdd and provides an interrupt to the system when Vdd falls below a selected ***threshold***. Other outputs and status bits are provided to indicate important voltage trip levels.

Refer to Section 30.2 Pin Behavior During Reset for a description of GPIO pin behavior during power up.

32.2 Register Definitions

The following registers are associated with the POR and LVD, and are listed in address order. The register descriptions below have an associated register table showing the bit structure. Depending on how many analog columns your PSoC device has (see the Cols. column in the register tables below), only certain bits are accessible to be read or written (refer to the table titled "CY8C28xxx Device Characteristics" on page 24).

The bits that are grayed out in the register tables are reserved bits and are not detailed in the register descriptions that follow. Reserved bits should always be written with a value of '0'. For a complete table of the POR and LVD registers, refer to the "Summary Table of the System Resource Registers" on page 462.

32.2.1 VLT_CR Register

Add.	Name	Cols.	Bit 7	Bit 6	Bit 5	Bit 4	Bit 3	Bit 2	Bit 1	Bit 0	Access
1,E3h	VLT_CR	4, 2	SMP		PORLEV[1:0]		LVDTBEN	VM[2:0]			RW : 00

The Voltage Monitor Control Register (VLT_CR) is used to set the trip points for POR, LVD, and the supply pump.

The VLT_CR register is cleared by all resets, which can cause reset cycling during very slow supply ramps to 5 V when the POR range is set for the 5-V range. This is because the reset clears the POR range setting back to 3 V and a new boot/start-up occurs (possibly many times). The user can manage this with Sleep mode and/or reading voltage status bits, if such cycling is an issue.

Bit 7: SMP. This bit controls whether or not the SMP will turn on when the supply (Vdd) voltage has dropped below the trip point set by VM[2:0]. The SMP is enabled when the SMP bit is '0'. Thus, the SMP is on by default. If this bit is set to '1' the SMP will not turn on regardless of the supply voltage level. Refer to the table titled "Availability of System Resources for CY8C28xxx Devices" on page 461 to determine if your PSoC device can use this bit.

Bits 5 and 4: PORLEV[1:0]. These bits set the Vdd level at which PPOR switches to one of three valid values. Note that 11b is a reserved value and therefore should not be used.

The three valid settings for these bits are:

- 00b (2.9 V operation)
- 01b (4.4 V operation)
- 10b (4.65 V operation)

See the “DC POR and LVD Specifications” table in the Electrical Specifications section of the PSoC device data sheet for voltage tolerances for each setting.

Bit 3: LVDTBEN. This bit is ANDed with LVD to produce a throttle-back signal that reduces CPU clock speed when low voltage conditions are detected. When the Throttle-Back signal is asserted, the CPU speed bits in the OSC_CR0 register are reset, forcing the CPU speed to 3 MHz or EXTCLK / 8.

Bits 2 to 0: VM[2:0]. These bits set the Vdd level at which LVD and the Pump Comparator switches. Refer to the table titled “Availability of System Resources for CY8C28xxx Devices” on page 461 to determine if your PSoC device has the Switch Mode Pump (SMP).

See the “DC POR and LVD Specifications” table in the Electrical Specifications section of the PSoC device data sheet for voltage tolerances for each setting.

For additional information, refer to the VLT_CR register on page 299.

32.2.2 VLT_CMP Register

Add.	Name	Cols.	Bit 7	Bit 6	Bit 5	Bit 4	Bit 3	Bit 2	Bit 1	Bit 0	Access
1,E4h	VLT_CMP	4, 2						PUMP	LVD	PPOR	R : 00

The Voltage Monitor Comparators Register (VLT_CMP) is used to read the state of internal supply voltage monitors.

Bit 3: NoWrite. This bit is only used in PSoC devices with a 2.4 V minimum POR. It reads the state of the Flash write voltage monitor.

Bit 2: PUMP. This bit reads the state of the Switch Mode Pump Vdd comparator. The trip points for both LVD and PUMP are set by VM[2:0] in the VLT_CR register. Refer to the table titled “Availability of System Resources for CY8C28xxx Devices” on page 461 to determine if your PSoC device can use this bit.

Bit 1: LVD. This bit reads the state of the low voltage detect comparator. The trip points for both LVD and PUMP are set by VM[2:0] in the VLT_CR register. Refer to the table titled “Availability of System Resources for CY8C28xxx Devices” on page 461 to determine if your PSoC device can use this bit.

Bit 0: PPOR. This bit reads back the state of the PPOR output. This can only be meaningfully read with PORLEV[1:0] set to disable PPOR. In that case, the PPOR status bit shows the comparator state directly.

For additional information, refer to the VLT_CMP register on page 300.

33. I/O Analog Multiplexer

This chapter explains the chip-wide I/O Analog Multiplexer for the CY8C28xxx PSoC® device and its associated registers. For a complete table of the I/O Analog Multiplexer registers, refer to the "Summary Table of the System Resource Registers" on page 462. For a quick reference of all PSoC registers in address order, refer to the Register Details chapter on page 125.

33.1 Architectural Description

The CY8C28x13, CY8C28x33, CY8C28x43, CY8C28x45, and CY8C28x52 PSoC devices contain an enhanced analog multiplexer (mux) capability. This function allows many I/O pins to connect to a common internal analog bus. In these devices, all I/O pins connect to this bus.

Any number of pins can be connected simultaneously, and dedicated support circuitry allows selected pins to be alternately charged high or connected to the bus. The analog bus can be connected as an input into either the positive or negative inputs of any analog continuous time (CT) block. A block diagram is shown in Figure 33-1.

Figure 33-1. Analog Mux System

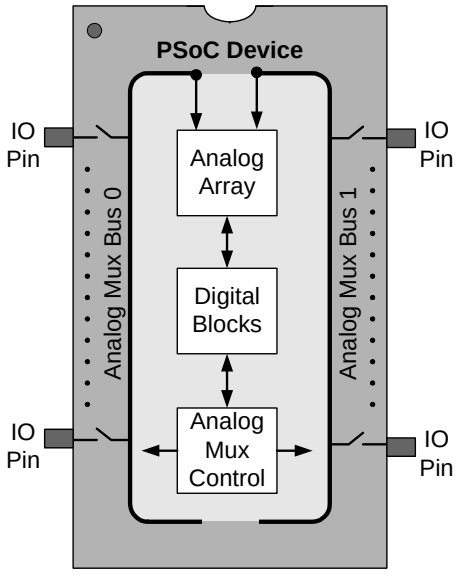

The Analog Mux Bus can be split into two separate nets, as shown in Figure 33-1. The two analog mux nets can be connected to different analog columns for simultaneous signal processing.

33.1.1 IOMUX and GPIO

For each pin, the mux capability exists in parallel with the normal GPIO cell described in the General Purpose I/O (GPIO) chapter on page 73 and shown in Figure 33-2. Normally, the associated GPIO pin is put into a high-impedance state for these applications, although there are cases where the GPIO cell is configured by the user to briefly drive pin initialization states as described here.

Pins are individually connected to the internal bus by setting the corresponding bits in the MUX_CRx registers. Any number of pins can be enabled at the same time. At reset, all of these mux connections are open (disconnected).

Figure 33-2. I/O Pin Configuration

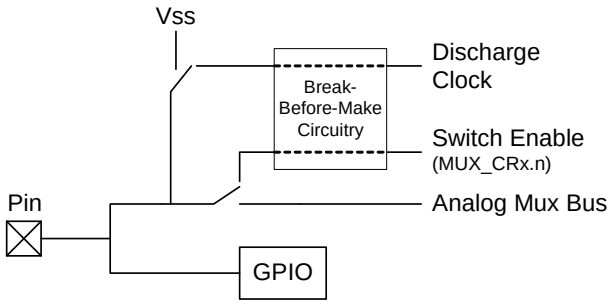

33.1.2 Dual Channel 8-Bit IDAC

The dual channel IDAC can provide two independent current sources based on the input current reference IUNIT. IUNIT is generated from PLL and can be trimmed in register IDAC_CR1. These two current sources can vary from 0 to 637.5 µA with 255 steps (IDACL_D and IDACR_D), and they are connected to analog mux bus left (AmuxBus0) and analog mux bus right (AmuxBus1) independently. These two current sources can act the same or independently due to the value of ICEN in register IDAC_CR1.

Figure 33-3. Dual Channel IDAC

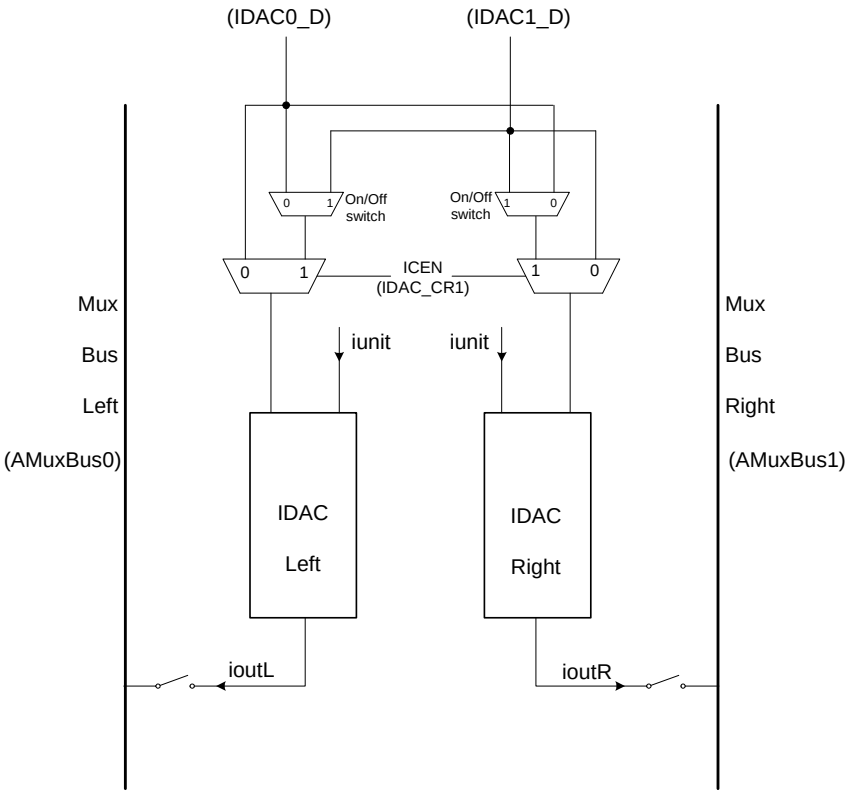

Therefore this IDAC block supports two different operation modes, depending on 'ICEN' bit setting.

Table 33-1. IDAC Operation Mode

Normal Mode	ICEN = 0	Left channel output current is decided by IDAC0_D register. Right channel output current is decided by IDAC1_D register. Both of them can be cut off depending on their switch ON/OFF signal.
Compensation Mode	ICEN = 1	The switches won't be cut off even the switch control signal is OFF. Both channels will output current based on IDAC0_D when the corresponding switch is ON. Both channels will output current based on IDAC1_D when the corresponding switch is OFF.

33.2 PSoC Device Distinctions

The CY8C28x03 and CY8C28x23 PSoC devices differ from the other CY8C28xxx devices in that they do not have a chip-wide, internal analog bus that can connect to every GPIO. The CY8C28x13, CY8C28x33, CY8C28x43, CY8C28x45, and CY8C28x52 device groups do have an analog mux bus. In the CY8C28xxx device groups that have I/O analog mux capability, all GPIO pins are enabled for this connection.

33.3 Application Description

The analog mux circuitry enables a variety of unique applications such as those explained in the following sections.

33.3.1 Capacitive Sensing

The analog mux supports capacitive sensing applications through the use of the I/O analog multiplexer and its control circuitry. Two off-chip capacitors are normally connected to the analog mux bus. One is the sense capacitor being measured and the other is an integration capacitor that accumulates charge from the sense capacitor. The integration capacitor is initialized (low) under firmware control, using its pin's GPIO cell. After that, the capacitor is charged through charge-sharing with the sense capacitor.

The sense capacitor can be automatically initialized and sensed for a number of cycles, to build up sufficient charge on the integration capacitor. Several clocking choices are available for selection in the AMUX_CFG register. The ***break-before-make*** circuitry is contained in each pin's mux so that each cycle's initialization of the sense capacitor does not disturb the internal bus. In the CY8C28x13, CY8C28x33, CY8C28x45, and CY8C28x52 PSoC devices, the sense capacitor is discharged to Vss and then released and reconnected to the analog mux for charge transfer from the inte-

gration capacitor. Although the CY8C28x43 devices have an analog mux bus, it does not have the IDACs or the precharge switching circuitry. Therefore, these devices do not support capacitive sensing applications. However, the analog mux bus in these devices is still useful for other analog applications that require many analog inputs.

Charge accumulation on the integration capacitor continues for the time you set. The integration capacitor voltage, seen on the analog mux bus, is typically compared against a reference such as the bandgap. Detecting a capacitance change is often more important than an absolute measurement, and a change in the charging time can indicate such a difference. A system with several sense capacitors can be measured in sequence, using the same integration capacitor.

A pin used as the integration capacitor is not switched during this process, so it remains connected to the analog mux. Two Port 0 pins are available for this function, as shown in Figure 33-4.

To activate the charge transfer mode, the precharge clock must be set to any state except the reset state. In the reset state, the mux connections are static, controlled only by the MUX_CRx register settings. The CY8C28x13, CY8C28x33, CY8C28x45, and CY8C28x52 PSoC devices can be configured to have two Analog Mux Bus nets because they support two simultaneous capacitive sensing operations.

Figure 33-4. Capacitance Sense Example Diagram

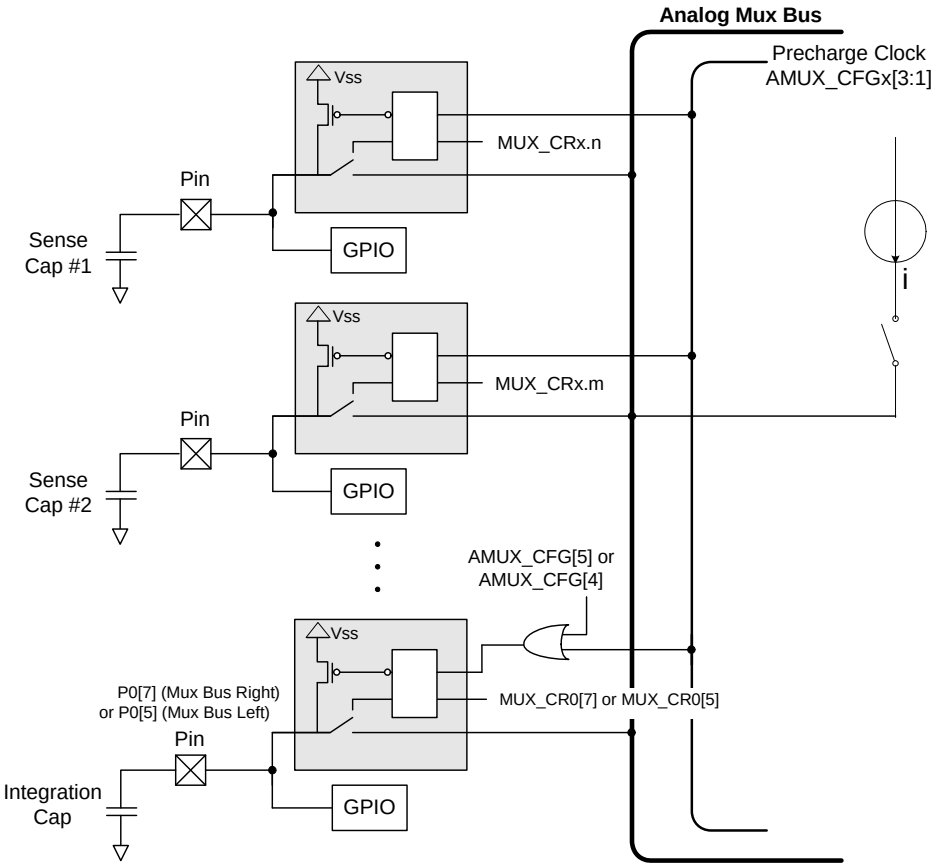

33.3.2 Chip-Wide Analog Input

The analog bus forms a multiplexer across many I/O pins. This allows any of these pins to be brought into the analog system for processing, as shown in Figure 33-1. The Port 0 pins are also brought through separate mux paths to the continuous time block, so Port 0 inputs can be routed to the analog system by either path.

In the CY8C28x13, CY8C28x33, CY8C28x43, CY8C28x45, and CY8C28x52 PSoC devices, odd pins are connected to AMUX Bus Left, and even pins to AMUX Bus Right. The two mux buses can be shorted together using the switch controlled by the SplitMux bit.

33.3.3 Crosspoint Switch

The bidirectional nature of the analog mux switches allows a direct connection between any of the I/O pins, as shown in Figure 33-1. Enabling two (or more) pins at the same time connects these pins together, with approximately 400 ohms of resistance between each pin and the analog mux bus. As long as the clock choice in the AMUX_CFGx registers is set to the fixed '0' case, the switches will be static, controlled only by the state of the individual switch enable bits in the MUX_CRx registers. The crosspoint can be reconfigured at any time and the user can provide a break-before-make function with firmware if needed.

33.3.4 Charging Current

The analog mux bus can be connected to the dedicated charging current. This enables applications such as capacitor measurement with this current instead of charge sharing. The IDAC_Dx and IDAC_CRx registers control this configurable current. In the CY8C28x13, CY8C28x33, CY8C28x45, and CY8C28x52 PSoC devices, there is a two-channel IDAC.

33.4 Register Definitions

The following registers are only associated with the Analog Bus Mux in the CY8C28x13, CY8C28x33, CY8C28x43, CY8C28x45, and CY8C28x52 PSoC devices and are listed in address order within their system resource configuration. For a complete table of the I/O Analog Multiplexer registers, refer to the “Summary Table of the System Resource Registers” on page 462. Each register description has an associated register table showing the bit structure for that register. Register bits that are grayed out throughout this document are reserved bits and are not detailed in the register descriptions that follow. Reserved bits should always be written with a value of ‘0’.

33.4.1 AMUX_CFG Register

Address	Name	Bit 7	Bit 6	Bit 5	Bit 4	Bit 3	Bit 2	Bit 1	Bit 0	Access
0,61h	AMUX_CFG	ABusMux1	ABusMux0	INTCAP[1:0]		MUXCLK0[2:0]			EN0	RW : 0

The Analog Mux Configuration Register (AMUX_CFG) is used to configure the clocked pre-charge mode of the analog multiplexer system.

Bit 7: ABusMux1. This bit selects the column 1 port input. It picks between port 0 inputs or the analog mux bus right.

Bit 6: ABusMux0. This bit selects the column 0 port input. It picks between port 0 inputs or the analog mux bus left.

Bits 5 and 4: INTCAP[1:0]. These bits are used to choose static connections to the analog mux bus even if the mux clocking is enabled in the MUXCLKx[2:0] setting.

Bits 3 to 1: MUXCLK0[2:0]. These bits select the precharge clock that drives the switching on the analog mux left (AMuxBus0). The default choice is to have no clocking and no precharge.

Bit 0: EN0. This bit enables the clock output. When the block is disabled, the output is ‘0’.

For additional information, refer to the AMUX_CFG register on page 146.

33.4.2 IDAC1_D Register

Address	Name	Bit 7	Bit 6	Bit 5	Bit 4	Bit 3	Bit 2	Bit 1	Bit 0	Access
0,FCh	IDAC1_D	IDAC1[7:0]								RW : 00

The Analog Mux right (AMuxBus1) DAC Data Register (IDAC1_D) specifies the 8-bit multiplying factor that determines the output DAC current.

Bits 7 to 0: IDAC1[7:0]. The 8-bit value in this register sets the current driven onto the analog mux bus when the current DAC mode is enabled.

For additional information, refer to the IDACx_D register on page 215.

33.4.3 IDAC0_D Register

Address	Name	Bit 7	Bit 6	Bit 5	Bit 4	Bit 3	Bit 2	Bit 1	Bit 0	Access
0,FDh	IDAC0_D	IDAC0[7:0]								RW : 00

The Analog Mux left (AMuxbus0) DAC Data Register (IDAC0_D) specifies the 8-bit multiplying factor that determines the output DAC current.

Bits 7 to 0: IDAC0[7:0]. The 8-bit value in this register sets the current driven onto the analog mux bus when the current DAC mode is enabled.

For additional information, refer to the IDACx_D register on page 215.

33.4.4 AMUX_CFG1 Register

Address	Name	Bit 7	Bit 6	Bit 5	Bit 4	Bit 3	Bit 2	Bit 1	Bit 0	Access
1,6Ah	AMUX_CFG1	ABusMux3	ABusMux2	ACol3Mux	ACol0Mux	MUXCLK1[2:0]			EN1	RW : 0

Bit 7: ABusMux3. 0: Select analog column 3 input to analog column 3 mux output. (Selects among Port 0 pins.)
1: Select analog column 3 input to the analog mux bus right.

Bit 6: ABusMux2. 0: Select analog column 2 input to analog column 2 mux output. (Selects among Port 0 pins.)
1: Select analog column 2 input to the analog mux bus left.

Bit 5: ACol3Mux. 0: Select analog column 3 input to analog column 3 input mux output. (3 Column: selects among P0[6,4,2,0].)
1: Select analog column 3 input to analog column 2 input mux output. (2 Column: selects among P0[7,5,3,1].)

Bit 4: ACol0Mux. 0: Select analog column 0 input to analog column 0 input mux output. (0 Column: selects among P0[7,5,3,1].)
1: Select analog column 0 input to analog column 1 input mux output. (1 Column: selects among P0[6,4,2,0].)

Bits 3 to 1: MUXCLK1[2:0]. Selects a precharge clock source for analog mux bus right (AMuxBus1) connections. The default choice is to have no clocking and no precharge.

Bit 0: EN1. 0: Disable MUXCLK Right output.
1: Enable MUXCLK Right output.

For additional information, refer to the AMUX_CFG1 register on page 246.

33.4.5 AMUX_CLK Register

Address	Name		Bit 6	Bit 5	Bit 4	Bit 3	Bit 2	Bit 1	Bit 0	Access
1,AFh	AMUX_CLK			CLKTOR	CLKTOL	CLK1SYNC[1:0]		CLK0SYNC[1:0]		RW : 00

The Analog Mux Clock Register (AMUX_CLK) is used to adjust the phase of the clock to the analog mux bus.

Bit 5: CLKTOR. 0: Select MUXCLK1 as clock to drive right side AMuxbus1's IOMUX.
1: Select MUXCLK0 as clock to drive right side AMuxbus1's IOMUX.

Bit 4: CLKTOL. 0: Select MUXCLK0 as clock to drive left side AMuxbus0's IOMUX.
1: Select MUXCLK1 as clock to drive left side AMuxbus0's IOMUX.

Bits 3 and 2: CLK1SYNC[1:0]. Synchronizes the right side MUXCLK (MUXCLK1). The right side MUXCLK that drives switching on the analog mux right (Muxbus1) can be synchronized to one of four phases, as listed. These settings can be used to optimize noise performance by varying the analog mux sampling point relative to the system clock.
00b: Synchronize to SYSCLK rising edge.
01b: Synchronize to delayed (approximately 5 ns) SYSCLK rising edge.
10b: Synchronize to SYSCLK falling edge.
11b: Synchronize to early (approximately 5 ns) SYSCLK rising edge.

Bits 1 and 0: CLK0SYNC[1:0]. Synchronizes the left side MUXCLK (MUXCLK0). The left side MUXCLK that drives switching on the analog mux left (Muxbus0) can be synchronized to one of four phases, as listed. These settings can be used to optimize noise performance by varying the analog mux sampling point relative to the system clock.
00b: Synchronize to SYSCLK rising edge.
01b: Synchronize to delayed (approximately 5 ns) SYSCLK rising edge.
10b: Synchronize to SYSCLK falling edge.
11b: Synchronize to early (approximately 5 ns) SYSCLK rising edge.

For additional information, refer to the AMUX_CLK register on page 285.

33.4.6 MUX_CRx Registers

Address	Name	Bit 7	Bit 6	Bit 5	Bit 4	Bit 3	Bit 2	Bit 1	Bit 0	Access
1,D8h	MUX_CR0	ENABLE[7:0]								RW : 00
1,D9h	MUX_CR1	ENABLE[7:0]								RW : 00
1,DAh	MUX_CR2	ENABLE[7:0]								RW : 00
1,DBh	MUX_CR3	ENABLE[7:0]								RW : 00
1,ECh	MUX_CR4	ENABLE[7:0]								RW : 00
1,EDh	MUX_CR5	ENABLE[7:0]								RW : 00

The Analog Mux Port Bit Enables Registers (MUX_CRx) are used to control the connection between the analog mux bus and the corresponding pin.

The upper 4 bits of the MUX_CR3 register are reserved in that device and will return zeros when read. The MUX_CRx registers with addresses 1,ECh and 1,EDh are only used by the CY8C28x45 and CY8C28x52 PSoC devices.

Bits 7 to 0: ENABLE[7:0]. The bits in these registers enable connection of individual pins to the analog mux bus. Each I/O port has a corresponding MUX_CRx register.

For additional information, refer to the MUX_CRx register on page 291.

33.4.7 IDAC_MODE

Address	Name	Bit 7	Bit 6	Bit 5	Bit 4	Bit 3	Bit 2	Bit 1	Bit 0	Access
1,E7h	IDAC_MODE	IDAC1_MD[3:0]				IDAC0_MD[3:0]				RW : 00

This register controls the selection of the IDAC ON/OFF Control.

Bits 7 to 1: IDACx_MD[3:0]. These bits select the signal to control IDAC ON/OFF.

0000b: Always ON

0001b to 0011b: Reserved

0100b to 0111b: DECD[0:3], 4 decimators' data inputs

1000b to 1011b: ACC_CMP[3:0], ACC compare buses

1100b to 1101b: Reserved

1110b to 1111b: ACE_CMPFF[1:0], ACE compare buses

For additional information, refer to the IDAC_MODE register on page 302.

33.4.8 IDAC_CR0 Register

Address	Name	Bit 7	Bit 6	Bit 5	Bit 4	Bit 3	Bit 2	Bit 1	Bit 0	Access
1,FDh	IDAC_CR0	SplitMux	MuxClkGE0	OSCMD1[1:0]		IRANGE	OSCMD0[1:0]		EN0	RW : 00

The Analog Mux DAC Control Register 0 (IDAC_CRx) contains the control bits for the IDAC current that drives the analog mux buses and for selecting the split configuration for the CY8C28x13, CY8C28x33, CY8C28x43, CY8C28x45, and CY8C28x52 PSoC devices.

Bit 7: SplitMux. This bit allows the analog mux bus to be configured as two separate nets.

Bit 6: MuxClkGE0. This bit controls connection of the analog mux bus left clock signal (MUXCLK0) to a global.

Bit 5 and 4: OSCMD1[1:0]. These bits, when set, enable the analog mux bus right (AMuxBus1) to reset to Vss whenever the comparator trip point is reached.

Bit 3: IRANGE. This bit selects the two current ranges that are available for the IDAC.

Bits 2 and 1: OSCMD0[1:0]. These bits, when set, enable the analog mux bus left (AMuxBus0) to reset to Vss whenever the comparator trip point is reached.

Bit 0: EN0. This bit controls whether or not the left channel IDAC mode is enabled.

For additional information, refer to the IDAC_CR0 register on page 309.

33.4.9 IDAC_CR1 Register

Address	Name	Bit 7	Bit 6	Bit 5	Bit 4	Bit 3	Bit 2	Bit 1	Bit 0	Access
1,DCh	IDAC_CR1	EN1	MuxClkGE1	ICEN	IDAC_TRIM				Double_Current	RW : 00

Bit 7: EN1. This bit controls whether or not the right channel IDAC mode is enabled.

Bit 6: MuxClkGE1. This bit controls connection of the analog mux bus right clock (MUXCLK1) signal to a global.

Bit 5: ICEN. When enabled, both left and right IDAC will use IDAC0_D for IDAC current setting when their output enable signal is high, and will automatically switch to use IDAC1_D register for IDAC current setting when their output enable signal is low. When ICEN is disabled, both IDAC will be controlled by their data and output on/off registers.

Bits 4 to 1: IDAC_TRIM. These four bits go to PLL and are used to trim IUNIT32 current output. The default value is 1000b (ideally it is 10 µA). Each step will change the current approximately by 3%.

Bit 0: Double_Current. This bit is used for IDAC current range control; it will combine with IDAC_CR0[3].IRANGE to define four different IDAC current range.

Double_Current	IDAC_CR0[3].IRANGE	Current Range
0 (default)	0 (default)	Reserved
1	0	Maximum 91.03 µA
0	1	Maximum 318.75 µA
1	1	Maximum 637.5 µA

For additional information, refer to the IDAC_CR1 register on page 292.

34. Real Time Clock (RTC)

This chapter covers the configuration and use of the real time clock (RTC) block and its associated registers. For a complete table of the related registers, refer to "Summary Table of the System Resource Registers" on page 462. For a quick reference of all PSoC® registers in address order, refer to the Register Details chapter on page 125.

34.1 Architectural Description

The RTC block supports a real time clock to count the time with an external crystal oscillator. It supports the following features:

1. Real time clock to count the time with external 32K Crystal oscillator.
2. Flexible interrupt sources between second, minute, hour, and day.
3. Hour, Minute and Second time read/write in BCD format (easier for external LCD display).
4. Normal timer if using VC1 as clock source. For more details about VC1 clock, refer to Section 34.1.4.
5. Sleep mode with internal or external 32K clock source.
6. Reset by PPOR, IPOR, and watchdog reset (but cannot be cleared by firmware reset).
7. Disable to save power.

34.1.1 BCD Code Counter

There are three counters in the RTC block to count the hour, minute and second in BCD format. The second counter will increase by 1 for every 65536 count clock period. The minute counter will increase by 1 for every 60 seconds. The hour counter will increase by 1 for every 60 minutes, and for every 24 hours there will be an optional day interrupt. As shown in Figure 34-1, for Counter65536, VC1 and CLK32K are two optional clock sources. When VC1 is selected as the clock input, the RTC block can be used as a fixed period timer based on the VC1 period.

Figure 34-1. BCD counters in RTC block

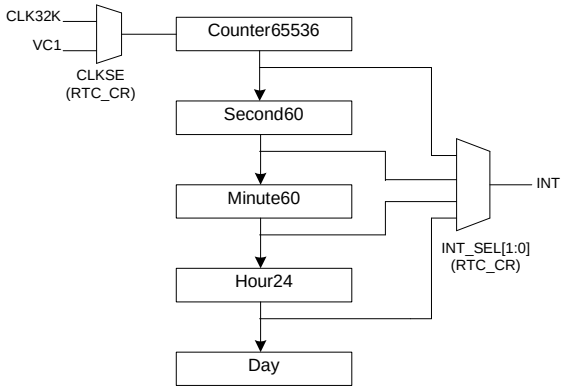

34.1.2 Writing RTC Data

In RTC block, there are three registers corresponding to the hour, minute and second: RTC_H, RTC_M, and RTC_S. They are all readable and writable. Firmware can write a BCD value for hour, minute and second. Note that writing to any one of these three registers will result in the counter65536 being reset to 0. The legal range for writing BCD value for RTC_H is 0 to 23, and for RTC_M and RTC_S is 0 to 59.

34.1.3 Reading RTC Data

To attain the current time of RTC, read registers RTC_H, RTC_M, and RTC_S. There are two methods for reading: sync read and no sync read. Sync read ensures that the HH:MM:SS data be synchronized to the time of RTC_H read operation. When sync read is enabled, the read of RTC_H will latch the current minute and second value into a buffer, therefore ensure that the MM:SS are synchronized to the time of RTC_H read operation. Also if sync read is disabled, the read value of HH:MM:SS will be aligned to each register's read time independently.

34.1.4 General Timer

As shown in Figure 34-1, there are two clock sources for counter65536. When VC1 is selected as the clock source, the RTC can be used as a general timer based on VC1 clock period. When used as a general timer, the programmed time period can be from *(65536*VC1)* to *(24*60*60)*(65536*VC1)* by setting different start values of RTC_H, RTC_M, and RTC_S.

34.2 Register Definitions

The following registers are associated with the real-time clock and are listed in address order within their system resource configuration. For a complete table of the real-time clock registers, refer to the "Summary Table of the System Resource Registers" on page 462. Each register description has an associated register table showing the bit structure for that register. Register bits that are grayed out throughout this document are reserved bits and are not detailed in the register descriptions that follow. Reserved bits should always be written with a value of '0'.

34.2.1 RTC_H

Address	Name	Bit 7	Bit 6	Bit 5	Bit 4	Bit 3	Bit 2	Bit 1	Bit 0	Access
1,A4h	RTC_H			HR1[1:0]		HR0[3:0]				R : 00

This register is used to read and write the current hour value in BCD format. Writing to this register will reset count65536 to all zeros. (Will be displayed as "XY"; the legal range is from 00 to 23.)

Bits 5 and 4. X value of hour

Bits 3 to 0. Y value of hour

34.2.2 RTC_M

Address	Name	Bit 7	Bit 6	Bit 5	Bit 4	Bit 3	Bit 2	Bit 1	Bit 0	Access
1,A5h	RTC_M		MIN1[2:0]			MIN0[3:0]				R : 00

This register is used to read and write the current minute value in BCD format. Writing to this register will reset count65536 to all zeros. (Will be displayed as "XY"; the legal range is from 00 to 59.)

Bits 6 to 4. X value of minute

Bits 3 to 0. Y value of minute

34.2.3 RTC_S

Address	Name	Bit 7	Bit 6	Bit 5	Bit 4	Bit 3	Bit 2	Bit 1	Bit 0	Access
1,A6h	RTC_S		SEC[2:0]			SEC[3:0]				RW : 00

This register is used to read and write the current second value in BCD format. Writing to this register will reset count65536 to all zeros. (Will be displayed as "XY"; the legal range is from 00 to 59.)

Bits 6 to 4. X value of second

Bits 3 to 0. Y value of second

34.2.4 RTC_CR

Address	Name	Bit 7	Bit 6	Bit 5	Bit 4	Bit 3	Bit 2	Bit 1	Bit 0	Access
1,A7h	RTC_CR			INT_EN	CLKSE	INT_SEL[1:0]		SYNCRD_EN	RT_EN	RW : 00

Bit 5: INT_EN. RTC interrupt enable.

1: Enable interrupt
0: Disable interrupt

Bit 4: CLKSE. RTC module clock source selection.

0: CLK32K
1: VC1

Bits 3 and 2: INT_SEL[1:0]. RTC interrupt source selection.

00b: Second
01b: Minute
10b: Hour
11b: Day

Bit 1: SYNCRD_EN. Sync read enable control.

0: Disable sync read
1: Enable sync read

Bit 0: RT_EN. RTC module enable control.

1: Enable RTC module
0: Disable RTC module

35. 10-Bit SAR ADC Controller

This chapter covers the configuration and use of the 10-bit SAR ADC controller and its associated registers. For a complete table of the 10-bit SAR ADC controller registers, refer to "Summary Table of the System Resource Registers" on page 462. For a quick reference of all PSoC® registers in address order, refer to the Register Details chapter on page 125.

35.1 Architectural Description

Figure 35-1 shows that the main components of SAR ADC controller are: Clock Generator, SAR FSM, DATA Process, and ADC Mode Control. The SAR ADC controller must work with the ADC comparator to complete the whole SAR ADC function.

Figure 35-1. SAR ADC Controller Top Level Block Diagram

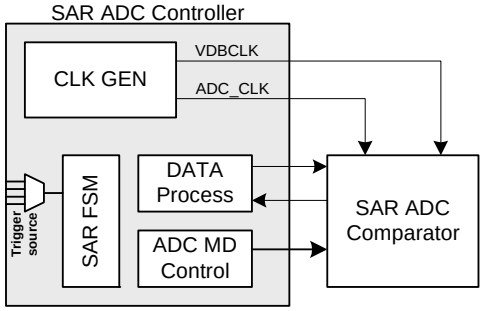

35.1.1 ADC Clock Generation

The ADC clock is the clock to ADC comparator and is derived from SYSCLK. It can be SYSCLK/2, /4, /6, /8, /12, /16, /32 or /64 (a total of eight selections). The ADC clock is targeted to provide a 2 MHz (maximum) clock to the ADC comparator. A special arrangement of 75-25 duty cycle is used because the ADC comparator needs more time to settle its internal VDAC output signal at high speed. The 75-25 clock duty does not apply to every frequency. At the low frequency end, it is approximately 52% duty. There is no ADC clock in IDLE state even if ADC is enabled.Figure 35-2 shows the detailed timing diagram.

Figure 35-2. ADC Clock Dividing

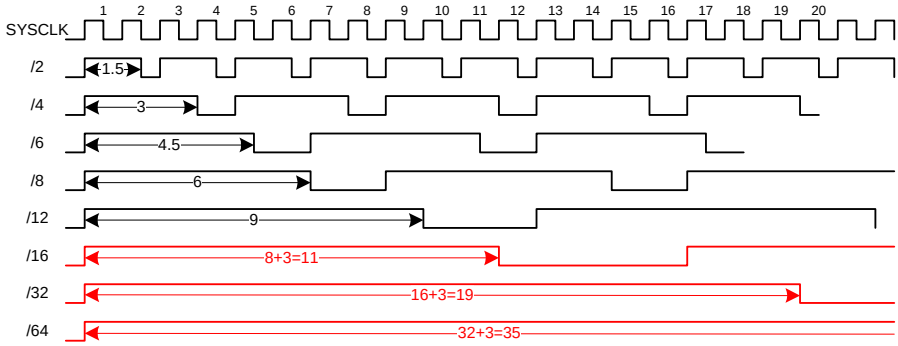

35.1.2 Voltage Doubler Clock Generation

There is a voltage doubler in the ADC comparator. Enable it when chip power is less than 3 V. You can use SYSCLK directly, or SYSCLK/4.

35.1.3 ADC FSM

SAR ADC needs 12 ADC clocks for one conversion. The first two clocks are for sampling the analog input signal. The next 10 clocks are for data conversion. However, one chosen ADC clock is stretched two times longer than other clocks in the conversion. (Refer to "A-D-C Operation Mode" on page 539 for details.) Therefore, a conversion has 13 clocks from an ADC FSM perspective. After this, at least one extra SYSCLK is needed for an IDLE state. Every conversion must start from an IDLE state and return to IDLE.

Figure 35-3. ADC FSM

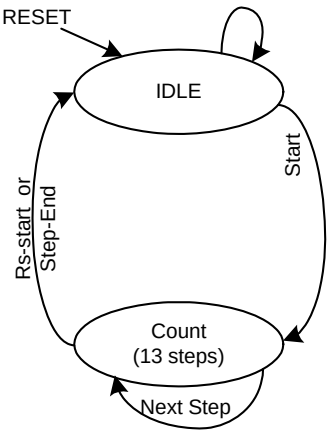

There are three modes to run A-D-C; that is, there are three modes to trigger a 'START' signal. The first one is SW trigger mode. Every time a 1 is written to the 'START' bit in the ADC_CR0 register (ADC should be enabled), it triggers a new conversion. The incomplete conversion (if there is one) is interrupted and the new conversion is started immediately. The state machine returns to IDLE after the conversion completes. The second mode is free-run mode. The conversions run repeatedly until you disable the ADC controller. However, the SW trigger is still available and a new conversion is started if a SW trigger is received. The third mode is HW trigger mode, also called auto-trigger mode or auto-align mode. Select one of four hardware trigger sources and use it to trigger 'START'. It acts similarly to SW trigger mode but the trigger source is changed.

Table 35-1. ADC Running Mode

Trigger Mode	'FREERUN' Bit	'ALIGN_EN' Bit
SW-Trigger	0	0
FREERUN	1	0
HW-Trigger	*	1

35.1.4 SAR Algorithm and Data Process

In IDLE mode, the ADC data stays 0. It starts data conversion from MSB to LSB in each ADC clock after the sample stage. It uses a binary search algorithm to find the digital data closest to the original input. It takes 10 cycles to get the result because it is 10-bit ADC. The format of the data that goes to ADC comparator (referred to as D[13:0] in this chapter) and the data stored in ADC controller (referred to as ADC_D[9:0] in this chapter) are different. First, the active state of the bits in D[13:0] is 0, and is 1 in ADC_D[9:0]. Secondly, ADC_D[9:0], and D[6:0] are binary coded, but D[13:7] are thermal coded. A binary-to-thermal code conversion is needed between ADC_D[9:7] and D[13:7]. Table 35-2 is the thermal code conversion table.

Table 35-2. ADC Thermal Code Conversion Table

D[13:7]	ADC_D[9:7]
111_1111	000
011_1111	001
001_1111	010
000_1111	011
000_0111	100
000_0011	101
000_0001	110
000_0000	111
D[6:0] = ~{ADC_D[6:0]}	

35.1.5 A-D-C Operation Mode

ADC comparator requires four A-D-C operation modes to achieve the best performance. Each mode has different control signal timing, as listed in the following figures.

Figure 35-4. A-D-C Operation Mode 0 (Default Mode)

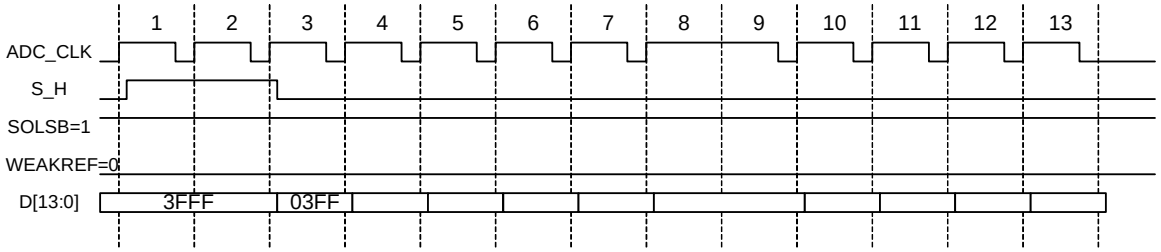

Figure 35-5. A-D-C Operation Mode 1

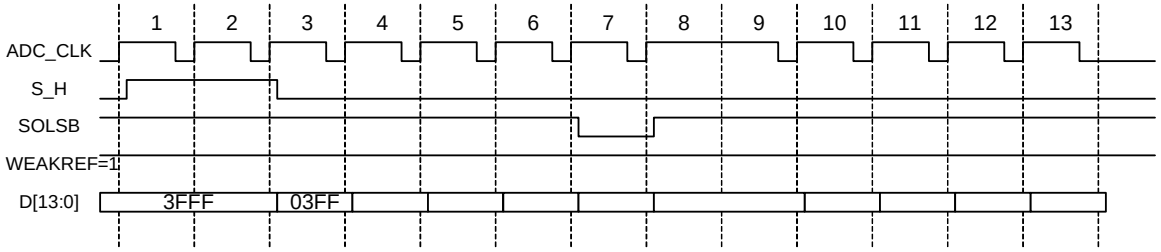

Figure 35-6. A-D-C Operation Mode 2

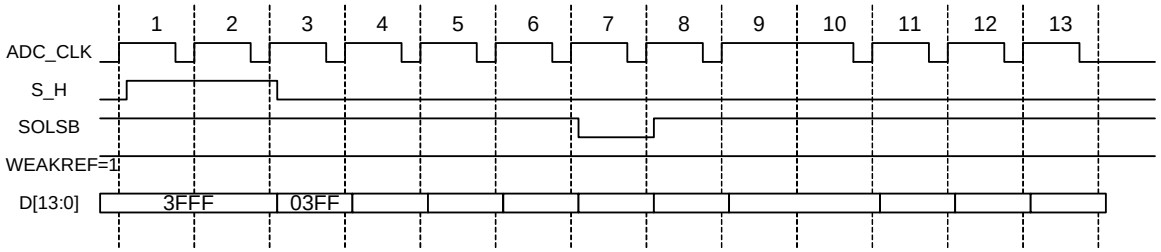

Figure 35-7. A-D-C Operation Mode 3

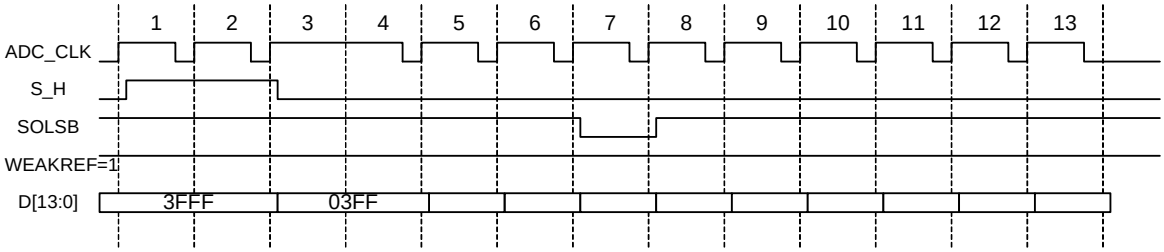

35.1.6 'Ready' Bit, 'Ongoing' Bit and Interrupt

In SADC_CR0, two status bits are used to reflect ADC status. The first is the 'Ready' bit, which is set when the ADC data register receives new data. It can only be cleared when the SADC_DH register is read, unless other new data arrives. The second status bit is the 'Ongoing' bit, which is the inverse of IDLE.

The ADC interrupt occurs when there is new data.

35.1.7 Converted Data Format and Read Sequence

The converted data is stored in two registers: SADC_DH (0,6Ah) and SADC_DL (0,6Bh). Both are 8-bit registers. By default the converted 10-bit data is right-justified, so the highest 6 bits in SADC_DH are always '0'. {ADC_DH[1:0], ADC_DL[7:0]} form the 10-bit ADC data. The 10-bit data can be left-justified by setting SADC_CR3 bit 7 as 1, and then the highest 6 bits in SADC_DL are always 0s. {SADC_DH[7:0], SADC_DL[1:0]} form the 10-bit ADC data.

Because there are always two reads to read DH and DL, an internal lock mechanism is required to avoid data conflict. In right-justified mode, SADC_DL should be read first, then SADC_DH follows. In left-justified mode, SADC_DH should be read first, then SADC_DL follows. The register containing the most useful bits should be read first.

35.2 Application Description

35.2.1 ADC Sample Rate and Clock Selection

The ADC sample rates are maximum< 142 ksps and minimum > 26.7 ksps, based on Table 35-3.

Table 35-3. ADC Sample Rate and Clock Selection

SYSCLK (IMO)	Fastest		Slowest	
	Clock Setting	Actual SPS	Clock Setting	Actual SPS
24 MHz	SYSCLK/12	142.8 ksps	SYSCLK/64	26.7 ksps

35.2.2 Voltage Doubler Enable

Enable the voltage doubler when Vcc is less than 3.0 V. Note that this voltage doubler enable is not gated off by ADC enable. To achieve a low power state, turn it OFF.

35.2.3 Reference Selection

Table 35-4. SAR ADC Reference Selection[a]

REFSEL[b]	BUFEN[c]	EXTREF[d]	ADC Reference Selection
0	X	X	Selects VDD
1	0	0	Selects UNBUFFERED Internally (REFHI) generated Reference Voltage supply 2.4 V ≤ VREF ≤ VDD – 0.3 V
1	0	1	Selects UNBUFFERED Externally forced Reference Voltage supply (input on P2.5) 2.4 V ≤ VREF ≤ VDD – 0.3 V
1	1	0	Selects BUFFERED Internally (REFHI) generated Reference Voltage supply 2.4 V ≤ VREF ≤ VDD – 0.3 V (Through ADC Internal Reference Buffer)
1	1	1	Selects BUFFERED Externally forced Reference Voltage supply (input on P2.5) 2.4 V ≤ VREF ≤ VDD – 0.3 V (Through ADC Internal Reference Buffer)

a. "X" = Don't Care/
b. REFSEL is bit 7 of SADC_CR2
c. BUFEN is bit 6 of SADC_CR2
d. EXTREF is bit 7 of SADC_CR3

35.3 Register Definitions

35.3.1 SADC_DH

Address	Name	Bit 7	Bit 6	Bit 5	Bit 4	Bit 3	Bit 2	Bit 1	Bit 0	Access
0,6Ah	SADC_DH	Data High [7:0]								R : 00

SADC_DH is the high byte of ADC data. 10-bit SAR ADC controller only exists in the CY8C28x03, CY8C28x13, CY8C28x33, CY8C28x43, and CY8C28x45 PSoC devices.

Bits 7 to 0: Data High [7:0]. The high byte of ADC data. Only the two least significant bits are valid when in right-justified mode. The ADC can be treated as an 8-bit ADC if you only read this byte as ADC data in left-justified mode.

For additional information, refer to the SADC_DH register on page 153.

35.3.2 SADC_DL

Address	Name	Bit 7	Bit 6	Bit 5	Bit 4	Bit 3	Bit 2	Bit 1	Bit 0	Access
0,6Bh	SADC_DL	Data Low [7:0]								R : 00

SADC_DL is the low byte of ADC data.10-bit SAR ADC controller only exists in the CY8C28x03, CY8C28x13, CY8C28x33, CY8C28x43, and CY8C28x45 PSoC devices.

Bits 7 to 0: Data Low [7:0]. The low byte of ADC data. It contains the least significant 8 bits of the 10-bit sample in right-justified data format. In left-justified data format only the bits [1:0] are valid to hold the least significant 2 bits of the 10-bit sample.

For additional information, refer to the SADC_DL register on page 154.

35.3.3 SADC_TSCR0

Address	Name	Bit 7	Bit 6	Bit 5	Bit 4	Bit 3	Bit 2	Bit 1	Bit 0	Access
1,71h	SADC_TSCR0	TS_INCMP_SEL[3:0]				INCMP_INV	INCMP_EN	CMPH_EN	CMPL_EN	RW : 00

SADC_TSCR0 selects the source for an external trigger, and enables trigger sources.

Bits 7 to 4: TS_INCMP_SEL[3:0]. These bits are used to select external or internal trigger source.

0000b: GIE[0]
0001b: GIE[1]
0010b: GIE[2]
0011b: GIE[3]
0100b: GIE[4]
0101b: GIE[5]
0110b: GIE[6]
0111b: GIE[7]
1000b: ACC_ACMP[0]
1001b: ACC_ACMP[1]
1010b: ACC_ACMP[2]
1011b: ACC_ACMP[3]
1100b: ACE_ACMP[0]
1101b: ACE_ACMP[1]
1110b to 1111b: Reserved

Bit 3: INCMP_INV. Inverted version of INCMP will be used when 1.

Bit 2: INCMP_EN. INCMP trigger source enable control; '1' to enable.

Bit 1: CMPH_EN. Enable high channel trigger source when 1.

Bit 0: CMPL_EN. Enable low channel trigger source when 1.

For additional information, refer to the SADC_TSCR0 register on page 247.

35.3.4 SADC_TSCR1

Address	Name	Bit 7	Bit 6	Bit 5	Bit 4	Bit 3	Bit 2	Bit 1	Bit 0	Access
1,72h	SADC_TSCR1		TS_CMPH_SEL[2:0]				TS_CMPL_SEL[2:0]			RW : 00

This register is used to select the digital block for high channel and low channel comparison.

Bit 6 to 4: TS_CMPH_SEL[3:0]. Used to select which digital block DR0 Register will be used for high channel comparison.

000b: DBC00
001b: DBC01
010b: DCC02
011b: DCC03
100b: DBC10
101b: DBC11
110b: DCC12
111b: DCC13

Bit 2 to 0: TS_CMPL_SEL[3:0]. Used to select which digital block DR0 Register will be used for low channel comparison.

000b: DBC00
001b: DBC01
010b: DCC02
011b: DCC03
100b: DBC10
101b: DBC11
110b: DCC12
111b: DCC13

Note If TIGSEL is set to 10b, then SADC_TSCMPL and SADC_TSCMPH can be used to form a 16-bit conversion.

For additional information, refer to the SADC_TSCR1 register on page 248.

35.3.5 SADC_TSCMPL

Address	Name	Bit 7	Bit 6	Bit 5	Bit 4	Bit 3	Bit 2	Bit 1	Bit 0	Access
1,81h	SADC_TSCMPL	TS_CMPH[7:0]								RW : 00

This register is used to set the compare value of low channel.

Bits 7 to 0: TS_CMPL[7:0]. The compare value of low channel.

For additional information, refer to the SADC_TSCMPL register on page 259.

35.3.6 SADC_TSCMPH

Address	Name	Bit 7	Bit 6	Bit 5	Bit 4	Bit 3	Bit 2	Bit 1	Bit 0	Access
1,82h	SADC_TSCMPH	TS_CMPH[7:0]								RW : 00

This register is used to set the compare value of high channel.

Bits 7 to 0: TS_CMPH[7:0]. The compare value of high channel.

For additional information, refer to the SADC_TSCMPH register on page 260.

35.3.7 SADC_CR0

Address	Name	Bit 7	Bit 6	Bit 5	Bit 4	Bit 3	Bit 2	Bit 1	Bit 0	Access
1,A8h	SADC_CR0		ADC_CHS[3:0]				READY	START/ ONGOING	ADC_EN	RW : 00

Bits 6 to 3: ADC_CHS[3:0]: ADC input channel selection.

- 0000b to 0111b: P0[0] to P0[7]
- 1000b to 1011b: ACC00-ACC03
- 1100b to 1110b: AMUXL, AMUXR, VBG
- 1111b: Reserved

Bit 2: READY. 1 shows that there is new data that has not been read.

Bit 1: START/ONGOING. If you read 1, the A-D conversion started and is not finished. Write 1 to it in SW trigger mode and it triggers a new conversion.

Bit 0: ADC_EN. ADC enable bit.

For additional information, refer to the SADC_CR0 register on page 279.

35.3.8 SADC_CR1

Address	Name	Bit 7	Bit 6	Bit 5	Bit 4	Bit 3	Bit 2	Bit 1	Bit 0	Access
1,A9h	SADC_CR1	CVTMD[1:0]		TIGSEL[1:0]		CLKSEL[2:0]			ALIGN_EN	RW : 00

10-bit SAR ADC controller only exists in the CY8C28x03, CY8C28x13, CY8C28x33, CY8C28x43, and CY8C28x45 PSoC devices.

Bits 7 and 6: CVTMD[1:0]. The conversion mode:

- 00b: the default mode that only the extra cycle for sixth bit conversion. Refer to Figure 35-4 on page 539.
- 01b: the extra cycle for sixth bit conversion with add-on weak Vref buffer. Refer to Figure 35-5 on page 539.
- 10b: the extra cycle for seventh bit conversion with add-on weak Vref buffer. Refer to Figure 35-6 on page 539.
- 11b: the extra cycle for first bit conversion with add-on weak Vref buffer. Refer to Figure 35-7 on page 539.

Bits 5 and 4: TIGSEL[1:0]. Auto-trigger source selection. It must work with ALIGN_EN. Refer to bit 0 of this register and SADC_TSCRx (1,71h and 1,72h) and SADC_TSCMPL/H (1,81h and 1,82h) register definitions for these trigger signals.

00b: TG_L
01b: TG_H
10b: TG_16BIT
11b: TG_INCMP

Bits 3 to 1: CLKSEL[3:0]. ADC Clock Selection

000b: SYSCLK/2
001b: SYSCLK/4
010b: SYSCLK/6
011b: SYSCLK/8
100b: SYSCLK/12
101b: SYSCLK/16
110b: SYSCLK/32
111b: SYSCLK/64

Bit 0: ALIGN_EN. 1 to enable auto-align/trigger function. The ADC is driven by outside-block trigger signal.

For additional information, refer to the SADC_CR1 register on page 280.

35.3.9 SADC_CR2

Address	Name	Bit 7	Bit 6	Bit 5	Bit 4	Bit 3	Bit 2	Bit 1	Bit 0	Access
1,AAh	SADC_CR2	REFSEL	BUFEN	VDBEN	VDB_CLKSEL	FREERUN				RW : 00

The 10-bit SAR ADC controller only exists in the CY8C28x03, CY8C28x13, CY8C28x33, CY8C28x43, and CY8C28x45 PSoC devices.

Bit 7: REFSEL. 1 to select external Vref other than Vdd. EXTREF in SADC_CR4 for external ref selection

Bit 6: BUFEN. 1 to enable Vref buffer. Otherwise bypasses Vref buffer.

Bit 5: VDBEN. 1 to enable voltage doubler in ADC comparator.

Bit 4: VDB_CLKSEL. 1 to select SYSLCK as VDB clock. Otherwise select SYSCLK/4 as VDB clock.

Bit 3: FREERUN. 1 is ADC in FREERUN mode if ADC is not in auto-align mode.

For additional information, refer to the SADC_CR2 register on page 281.

35.3.10 SADC_CR3

Address	Name	Bit 7	Bit 6	Bit 5	Bit 4	Bit 3	Bit 2	Bit 1	Bit 0	Access
1,ABh	SADC_CR3	LALIGN					ADC_TRIM0[2:0]			RW : 04h

The 10-bit SAR ADC controller only exists in the CY8C28x03, CY8C28x13, CY8C28x33, CY8C28x43, and CY8C28x45 PSoC devices.

Bit 7: LALIGN: ‘1’ to left justified data format.

Bits 2 to 0: ADC_TRIM0[2:0]. Sent to ADC comparator block directly. The reset value is 100b.

For additional information, refer to the SADC_CR3 register on page 282.

35.3.11 SADC_CR4

Address	Name	Bit 7	Bit 6	Bit 5	Bit 4	Bit 3	Bit 2	Bit 1	Bit 0	Access
1,ACh	SADC_CR4	EXTREF								# : 02h

10-bit SAR ADC controller only exists in the CY8C28x03, CY8C28x13, CY8C28x33, CY8C28x43, and CY8C28x45 PSoC devices.

Bit 7: EXTREF. ‘1’ to select external Vref input on P2[5].

For additional information, refer to the SADC_CR4 register on page 283.

35.4 PSoC Device Distinctions

The 10-bit SAR ADC controller only exists in the CY8C28x03, CY8C28x13, CY8C28x33, CY8C28x43, and CY8C28x45 PSoC device groups.

35.5 Clocking

SYSCLK is a primary clock input of SAR ADC controller block.

Section H: Glossary

The Glossary section explains the terminology used in this technical reference manual. Glossary terms are characterized in ***bold, italic font*** throughout the text of this manual.

A

accumulator	In a CPU, a register in which intermediate results are stored. Without an accumulator, it is necessary to write the result of each calculation (addition, subtraction, shift, and so on.) to main memory and read them back. Access to main memory is slower than access to the accumulator, which usually has direct paths to and from the arithmetic and logic unit (ALU).
active high	1. A logic signal having its asserted state as the logic 1 state. 2. A logic signal having the logic 1 state as the higher voltage of the two states.
active low	1. A logic signal having its asserted state as the logic 0 state. 2. A logic signal having its logic 1 state as the lower voltage of the two states: inverted logic.
address	The label or number identifying the memory location (RAM, ROM, or register) where a unit of information is stored.
algorithm	A procedure for solving a mathematical problem in a finite number of steps that frequently involve repetition of an operation.
ambient temperature	The temperature of the air in a designated area, particularly the area surrounding the PSoC device.
analog	See ***analog signals***.
analog blocks	The basic programmable opamp circuits. These are SC (switched capacitor) and CT (continuous time) blocks. These blocks can be interconnected to provide ADCs, DACs, multi-pole filters, gain stages, and much more.
analog output	An output that is capable of driving any voltage between the supply rails, instead of just a logic 1 or logic 0.
analog signals	A signal represented in a continuous form with respect to continuous times, as contrasted with a digital signal represented in a discrete (discontinuous) form in a sequence of time.
analog-to-digital (ADC)	A device that changes an analog signal to a digital signal of corresponding magnitude. Typically, an ADC converts a voltage to a digital number. The ***digital-to-analog (DAC)*** converter performs the reverse operation.

AND See ***Boolean Algebra***.

API (Application Programming Interface) A series of software routines that comprise an interface between a computer application and lower-level services and functions (for example, user modules and libraries). APIs serve as building blocks for programmers that create software applications.

array An array, also known as a vector or list, is one of the simplest data structures in computer programming. Arrays hold a fixed number of equally-sized data elements, generally of the same data type. Individual elements are accessed by index using a consecutive range of integers, as opposed to an associative array. Most high level programming languages have arrays as a built-in data type. Some arrays are multi-dimensional, meaning they are indexed by a fixed number of integers; for example, by a group of two integers. One- and two-dimensional arrays are the most common. Also, an array can be a group of capacitors or resistors connected in some common form.

assembly A symbolic representation of the machine language of a specific processor. Assembly language is converted to machine code by an assembler. Usually, each line of assembly code produces one machine instruction, though the use of macros is common. Assembly languages are considered low level languages; where as C is considered a high level language.

asynchronous A signal whose data is acknowledged or acted upon immediately, irrespective of any clock signal.

attenuation The decrease in intensity of a signal as a result of absorption of energy and of scattering out of the path to the detector, but not including the reduction due to geometric spreading. Attenuation is usually expressed in dB.

B

bandgap reference A stable voltage reference design that matches the positive temperature coefficient of V_T with the negative temperature coefficient of V_{BE}, to produce a zero temperature coefficient (ideally) reference.

bandwidth

1. The frequency range of a message or information processing system measured in hertz.
2. The width of the spectral region over which an amplifier (or absorber) has substantial gain (or loss); it is sometimes represented more specifically as, for example, full width at half maximum.

bias

1. A systematic deviation of a value from a reference value.
2. The amount by which the average of a set of values departs from a reference value.
3. The electrical, mechanical, magnetic, or other force (field) applied to a device to establish a reference level to operate the device.

bias current The constant low level DC current that is used to produce a stable operation in amplifiers. This current can sometimes be changed to alter the bandwidth of an amplifier.

binary The name for the base 2 numbering system. The most common numbering system is the base 10 numbering system. The base of a numbering system indicates the number of values that may exist for a particular positioning within a number for that system. For example, in base 2, binary, each position may have one of two values (0 or 1). In the base 10, decimal, numbering system, each position may have one of ten values (0, 1, 2, 3, 4, 5, 6, 7, 8, and 9).

bit A single digit of a binary number. Therefore, a bit may only have a value of ‘0’ or ‘1’. A group of 8 bits is called a byte. Because the PSoC® devices's M8C is an 8-bit microcontroller, the PSoC platform’s native data chunk size is a byte.

bit rate (BR) The number of bits occurring per unit of time in a bit stream, usually expressed in bits per second (bps).

block
1. A functional unit that performs a single function, such as an oscillator.
2. A functional unit that may be configured to perform one of several functions, such as a digital PSoC block or an analog PSoC block.

Boolean Algebra In mathematics and computer science, Boolean algebras or Boolean lattices, are algebraic structures which "capture the essence" of the logical operations AND, OR and NOT as well as the set theoretic operations union, intersection, and complement. Boolean algebra also defines a set of theorems that describe how Boolean equations can be manipulated. For example, these theorems are used to simplify Boolean equations, which will reduce the number of logic elements needed to implement the equation.

The operators of Boolean algebra may be represented in various ways. Often they are simply written as AND, OR, and NOT. In describing circuits, NAND (NOT AND), NOR (NOT OR), XNOR (exclusive NOT OR), and XOR (exclusive OR) may also be used. Mathematicians often use + (for example, A+B) for OR and • for AND (for example, A*B) (because in some ways those operations are analogous to addition and multiplication in other algebraic structures) and represent NOT by a line drawn above the expression being negated (for example, ~A, A_, !A).

break-before-make The elements involved go through a disconnected state entering (‘break”) before the new connected state (“make”).

broadcast net A signal that is routed throughout the microcontroller and is accessible by many blocks or systems.

buffer
1. A storage area for data that is used to compensate for a speed difference, when transferring data from one device to another. Usually refers to an area reserved for I/O operations, into which data is read, or from which data is written.
2. A portion of memory set aside to store data, often before it is sent to an external device or as it is received from an external device.
3. An amplifier used to lower the output impedance of a system.

bus
1. A named connection of nets. Bundling nets together in a bus makes it easier to route nets with similar routing patterns.
2. A set of signals performing a common function and carrying similar data. Typically represented using vector notation; for example, address[7:0].
3. One or more conductors that serve as a common connection for a group of related devices.

byte A digital storage unit consisting of 8 bits.

C

C A high level programming language.

capacitance A measure of the ability of two adjacent conductors, separated by an insulator, to hold a charge when a voltage differential is applied between them. Capacitance is measured in units of Farads.

capture	To extract information automatically through the use of software or hardware, as opposed to hand-entering of data into a computer file.
chaining	Connecting two or more 8-bit digital blocks to form 16-, 24-, and even 32-bit functions. Chaining allows certain signals such as Compare, Carry, Enable, Capture, and Gate to be produced from one block to another.
checksum	The checksum of a set of data is generated by adding the value of each data word to a sum. The actual checksum can simply be the result sum or a value that must be added to the sum to generate a pre-determined value.
clear	To force a bit/register to a value of logic ‘0’.
clock	The device that generates a periodic signal with a fixed frequency and duty cycle. A clock is sometimes used to synchronize different logic blocks.
clock generator	A circuit that is used to generate a clock signal.
CMOS	The logic gates constructed using ***MOS*** transistors connected in a complementary manner. CMOS is an acronym for complementary metal-oxide semiconductor.
comparator	An electronic circuit that produces an output voltage or current whenever two input levels simultaneously satisfy predetermined amplitude requirements.
compiler	A program that translates a high level language, such as C, into machine language.
configuration	In a computer system, an arrangement of functional units according to their nature, number, and chief characteristics. Configuration pertains to hardware, software, firmware, and documentation. The configuration will affect system performance.
configuration space	In PSoC devices, the register space accessed when the XIO bit, in the CPU_F register, is set to ‘1’.
crowbar	A type of over-voltage protection that rapidly places a low resistance shunt (typically an SCR) from the signal to one of the power supply rails, when the output voltage exceeds a predetermined value.
crystal oscillator	An oscillator in which the frequency is controlled by a piezoelectric crystal. Typically a piezoelectric crystal is less sensitive to ambient temperature than other circuit components.
cyclic redundancy check (CRC)	A calculation used to detect errors in data communications, typically performed using a linear feedback shift register. Similar calculations may be used for a variety of other purposes such as data compression.

D

data bus	A bidirectional set of signals used by a computer to convey information from a memory location to the central processing unit and vice versa. More generally, a set of signals used to convey data between digital functions.
data stream	A sequence of digitally encoded signals used to represent information in transmission.
data transmission	The sending of data from one place to another by means of signals over a channel.

debugger A hardware and software system that allows the user to analyze the operation of the system under development. A debugger usually allows the developer to step through the firmware one step at a time, set break points, and analyze memory.

dead band A period of time when neither of two or more signals are in their active state or in transition.

decimal A base-10 numbering system, which uses the symbols 0, 1, 2, 3, 4, 5, 6, 7, 8 and 9 (called digits) together with the decimal point and the sign symbols + (plus) and – (minus) to represent numbers.

default value Pertaining to the pre-defined initial, original, or specific setting, condition, value, or action a system will assume, use, or take in the absence of instructions from the user.

device The device referred to in this manual is the PSoC chip, unless otherwise specified.

die An unpackaged integrated circuit (IC), normally cut from a wafer.

digital A signal or function, the amplitude of which is characterized by one of two discrete values: '0' or '1'.

digital blocks The 8-bit logic blocks that can act as a counter, timer, serial receiver, serial transmitter, CRC generator, pseudo-random number generator, or SPI.

digital logic A methodology for dealing with expressions containing two-state variables that describe the behavior of a circuit or system.

digital-to-analog (DAC) A device that changes a digital signal to an analog signal of corresponding magnitude. The ***analog-to-digital (ADC)*** converter performs the reverse operation.

direct access The capability to obtain data from a storage device, or to enter data into a storage device, in a sequence independent of their relative positions by means of addresses that indicate the physical location of the data.

duty cycle The relationship of a clock period ***high time*** to its ***low time***, expressed as a percent.

E

emulator Duplicates (provides an emulation of) the functions of one system with a different system, so that the second system appears to behave similar to the first system.

External Reset (XRES) An active high signal that is driven into the PSoC device. It causes all operation of the CPU and blocks to stop and return to a pre-defined state.

F

falling edge A transition from a logic 1 to a logic 0. Also known as a negative edge.

feedback The return of a portion of the output, or processed portion of the output, of a (usually active) device to the input.

filter A device or process by which certain frequency components of a signal are attenuated.

firmware The software that is embedded in a hardware device and executed by the CPU. The software may be executed by the end user, but it may not be modified.

flag Any of various types of indicators used for identification of a condition or event (for example, a character that signals the termination of a transmission).

Flash An electrically programmable and erasable, non***volatile*** technology that provides users with the programmability and data storage of EPROMs, plus in-system erasability. Nonvolatile means that the data is retained when power is off.

Flash bank A group of Flash ROM blocks where Flash block numbers always begin with '0' in an individual Flash bank. A Flash bank also has its own block level protection information.

Flash block The smallest amount of Flash ROM space that may be programmed at one time and the smallest amount of Flash space that may be protected. A Flash block holds 64 bytes.

flip-flop A device having two stable states and two input terminals (or types of input signals) each of which corresponds with one of the two states. The circuit remains in either state until it is made to change to the other state by application of the corresponding signal.

frequency The number of cycles or events per unit of time, for a periodic function.

G

gain The ratio of output current, voltage, or power to input current, voltage, or power, respectively. Gain is usually expressed in dB.

gate

1. A device having one output channel and one or more input channels, such that the output channel state is completely determined by the input channel states, except during switching transients.
2. One of many types of combinational logic elements having at least two inputs (for example, AND, OR, NAND, and NOR (also see ***Boolean Algebra***)).

ground

1. The electrical neutral line having the same potential as the surrounding earth.
2. The negative side of DC power supply.
3. The reference point for an electrical system.
4. The conducting paths between an electric circuit or equipment and the earth, or some conducting body serving in place of the earth.

H

hardware A comprehensive term for all of the physical parts of a computer or embedded system, as distinguished from the data it contains or operates on, and the software that provides instructions for the hardware to accomplish tasks.

hardware reset A reset that is caused by a circuit, such as a POR, watchdog reset, or external reset. A hardware reset restores the state of the device as it was when it was first powered up. Therefore, all registers are set to the POR value as indicated in register tables throughout this document.

hexadecimal A base 16 numeral system (often abbreviated and called hex), usually written using the symbols 0-9 and A-F. It is a useful system in computers because there is an easy mapping from four bits to a single hex digit. Thus, one can represent every byte as two consecutive hexadecimal digits. Compare the binary, hex, and decimal representations:

bin	=	hex	=	dec
0000b	=	0x0	=	0
0001b	=	0x1	=	1
0010b	=	0x2	=	2
...				
1001b	=	0x9	=	9
1010b	=	0xA	=	10
1011b	=	0xB	=	11
...				
1111b	=	0xF	=	15

So the decimal numeral 79 whose binary representation is 0100 1111b can be written as 4Fh in hexadecimal (0x4F).

high time The amount of time the signal has a value of '1' in one period, for a periodic digital signal.

I

I²C A two-wire serial computer bus by Phillips Semiconductors (now NXP). I²C is an Inter-Integrated Circuit. It is used to connect low-speed peripherals in an embedded system. The original system was created in the early 1980s as a battery control interface, but it was later used as a simple internal bus system for building control electronics. I²C uses only two bidirectional pins, clock and data, both running at +5 V and pulled high with resistors. The bus operates at 100 kbps in standard mode and 400 kbps in fast mode. I²C™ is a trademark of NXP.

ICE The in-circuit emulator that allows users to test the project in a hardware environment, while viewing the debugging device activity in a software environment (PSoC Designer™).

idle state A condition that exists whenever user messages are not being transmitted, but the service is immediately available for use.

impedance

1. The resistance to the flow of current caused by resistive, capacitive, or inductive devices in a circuit.
2. The total passive opposition offered to the flow of electric current. Note the impedance is determined by the particular combination of resistance, inductive reactance, and capacitive reactance in a given circuit.

input A point that accepts data, in a device, process, or channel.

input/output (I/O) A device that introduces data into or extracts data from a system.

instruction An expression that specifies one operation and identifies its operands, if any, in a programming language such as C or assembly.

integrated circuit (IC) A device in which components such as resistors, capacitors, diodes, and ***transistors*** are formed on the surface of a single piece of semiconductor.

interface The means by which two systems or devices are connected and interact with each other.

interrupt A suspension of a process, such as the execution of a computer program, caused by an event external to that process, and performed in such a way that the process can be resumed.

interrupt service routine (ISR) A block of code that normal code execution is diverted to when the M8C receives a hardware interrupt. Many interrupt sources may each exist with its own priority and individual ISR code block. Each ISR code block ends with the RETI instruction, returning the device to the point in the program where it left normal program execution.

J

jitter

1. A misplacement of the timing of a transition from its ideal position. A typical form of corruption that occurs on serial data streams.
2. The abrupt and unwanted variations of one or more signal characteristics, such as the interval between successive pulses, the amplitude of successive cycles, or the frequency or phase of successive cycles.

K

keeper A circuit that holds a signal to the last driven value, even when the signal becomes un-driven.

L

latency The time or delay that it takes for a signal to pass through a given circuit or network.

least significant bit (LSb) The binary digit, or bit, in a binary number that represents the least significant value (typically the right-hand bit). The bit versus byte distinction is made by using a lower case “b” for bit in LSb.

least significant byte (LSB) The byte in a multi-byte word that represents the least significant values (typically the right-hand byte). The byte versus bit distinction is made by using an upper case “B” for byte in LSB.

Linear Feedback Shift Register (LFSR) A shift register whose data input is generated as an ***XOR*** of two or more elements in the register chain.

load The electrical demand of a process expressed as power (watts), current (amps), or resistance (ohms).

logic function A mathematical function that performs a digital operation on digital data and returns a digital value.

look-up table (LUT) A logic block that implements several logic functions. The logic function is selected by means of select lines and is applied to the inputs of the block. For example: A two input LUT with four select lines can be used to perform any one of 16 logic functions on the two inputs resulting in a single logic output. The LUT is a combinational device; therefore, the input/output relationship is continuous, that is, not sampled.

low time The amount of time the signal has a value of ‘0’ in one period, for a periodic digital signal.

low voltage detect (LVD) A circuit that senses Vdd and provides an interrupt to the system when Vdd falls below a selected threshold.

M

M8C An 8-bit Harvard Architecture microprocessor. The microprocessor coordinates all activity inside a PSoC device by interfacing to the Flash, SRAM, and register space.

macro A programming language macro is an abstraction, whereby a certain textual pattern is replaced according to a defined set of rules. The interpreter or compiler automatically replaces the macro instance with the macro contents when an instance of the macro is encountered. Therefore, if a macro is used 5 times and the macro definition required 10 bytes of code space, 50 bytes of code space will be needed in total.

mask

1. To obscure, hide, or otherwise prevent information from being derived from a signal. It is usually the result of interaction with another signal, such as noise, static, jamming, or other forms of interference.
2. A pattern of bits that can be used to retain or suppress segments of another pattern of bits, in computing and data processing systems.

master device A device that controls the timing for data exchanges between two devices. Or when devices are cascaded in width, the master device is the one that controls the timing for data exchanges between the cascaded devices and an external interface. The controlled device is called the ***slave device***.

microcontroller An integrated circuit chip that is designed primarily for control systems and products. In addition to a CPU, a microcontroller typically includes memory, timing circuits, and I/O circuitry. The reason for this is to permit the realization of a controller with a minimal quantity of chips, thus achieving maximal possible miniaturization. This in turn, will reduce the volume and the cost of the controller. The microcontroller is normally not used for general-purpose computation as is a microprocessor.

mixed-signal The reference to a circuit containing both analog and digital techniques and components.

mnemonic A tool intended to assist the memory. Mnemonics rely on not only repetition to remember facts, but also on creating associations between easy-to-remember constructs and lists of data. A two to four character string representing a microprocessor instruction.

mode A distinct method of operation for software or hardware. For example, the Digital PSoC block may be in either counter mode or timer mode.

modulation A range of techniques for encoding information on a carrier signal, typically a sine-wave signal. A device that performs modulation is known as a modulator.

Modulator A device that imposes a signal on a carrier.

MOS An acronym for metal-oxide semiconductor.

most significant bit (MSb) The binary digit, or bit, in a binary number that represents the most significant value (typically the left-hand bit). The bit versus byte distinction is made by using a lower case “b” for bit in MSb.

most significant byte (MSB) The byte in a multi-byte word that represents the most significant values (typically the left-hand byte). The byte versus bit distinction is made by using an upper case “B” for byte in MSB.

multiplexer (mux) 1. A logic function that uses a binary value, or address, to select between a number of inputs and conveys the data from the selected input to the output.
2. A technique which allows different input (or output) signals to use the same lines at different times, controlled by an external signal. Multiplexing is used to save on wiring and I/O ports.

N

NAND See ***Boolean Algebra***.

negative edge A transition from a logic 1 to a logic 0. Also known as a falling edge.

net The routing between devices.

nibble A group of four bits, which is one-half of a byte.

noise 1. A disturbance that affects a signal and that may distort the information carried by the signal.
2. The random variations of one or more characteristics of any entity such as voltage, current, or data.

NOR See ***Boolean Algebra***.

NOT See ***Boolean Algebra***.

O

OR See ***Boolean Algebra***.

oscillator A circuit that may be crystal controlled and is used to generate a clock frequency.

output The electrical signal or signals which are produced by an analog or digital block.

P

parallel The means of communication in which digital data is sent multiple bits at a time, with each simultaneous bit being sent over a separate line.

parameter Characteristics for a given block that have either been characterized or may be defined by the designer.

parameter block A location in memory where parameters for the SSC instruction are placed prior to execution.

parity A technique for testing transmitting data. Typically, a binary digit is added to the data to make the sum of all the digits of the binary data either always even (even parity) or always odd (odd parity).

path 1. The logical sequence of instructions executed by a computer.
2. The flow of an electrical signal through a circuit.

pending interrupts An interrupt that has been triggered but has not been serviced, either because the processor is busy servicing another interrupt or global interrupts are disabled.

phase	The relationship between two signals, usually the same frequency, that determines the delay between them. This delay between signals is either measured by time or angle (degrees).
Phase-Locked Loop (PLL)	An electronic circuit that controls an ***oscillator*** so that it maintains a constant phase angle relative to a reference signal.
pin	A terminal on a hardware component. Also called lead.
pinouts	The pin number assignment: the relation between the logical inputs and outputs of the PSoC device and their physical counterparts in the printed circuit board (PCB) package. Pinouts will involve pin numbers as a link between schematic and PCB design (both being computer generated files) and may also involve pin names.
port	A group of pins, usually eight.
positive edge	A transition from a logic 0 to a logic 1. Also known as a rising edge.
posted interrupts	An interrupt that has been detected by the hardware but may or may not be enabled by its mask bit. Posted interrupts that are not masked become pending interrupts.
Power On Reset (POR)	A circuit that forces the PSoC device to reset when the voltage is below a pre-set level. This is one type of ***hardware reset***.
program counter	The instruction pointer (also called the program counter) is a register in a computer processor that indicates where in memory the CPU is executing instructions. Depending on the details of the particular machine, it holds either the address of the instruction being executed, or the address of the next instruction to be executed.
protocol	A set of rules. Particularly the rules that govern networked communications.
PSoC®	Cypress Semiconductor's Programmable System-on-Chip (PSoC®). PSoC is a registered trademark of Cypress.
PSoC blocks	*See* ***analog blocks*** and ***digital blocks***.
PSoC Designer™	The software for designing with Cypress's Programmable System-on-Chip technology.
pulse	A rapid change in some characteristic of a signal (for example, phase or frequency), from a baseline value to a higher or lower value, followed by a rapid return to the baseline value.
pulse width modulator (PWM)	An output in the form of duty cycle which varies as a function of the applied measurand.

R

RAM	An acronym for random access memory. A data-storage device from which data can be read out and new data can be written in.
register	A storage device with a specific capacity, such as a bit or byte.
reset	A means of bringing a system back to a know state. See ***hardware reset*** and ***software reset***.
resistance	The resistance to the flow of electric current measured in ohms for a conductor.

revision ID A unique identifier of a PSoC device.

ripple divider An asynchronous ripple counter constructed of flip-flops. The clock is fed to the first stage of the counter. An n-bit binary counter consisting of n flip-flops that can count in binary from 0 to $2^n - 1$.

rising edge *See* ***positive edge***.

ROM An acronym for read only memory. A data-storage device from which data can be read out, but new data cannot be written in.

routine A block of code, called by another block of code, that may have some general or frequent use.

routing Physically connecting objects in a design according to design rules set in the reference library.

runt pulses In digital circuits, narrow pulses that, due to non-zero rise and fall times of the signal, do not reach a valid high or low level. For example, a runt pulse may occur when switching between asynchronous clocks or as the result of a race condition in which a signal takes two separate paths through a circuit. These race conditions may have different delays and are then recombined to form a glitch or when the output of a flip-flop becomes metastable.

S

sampling The process of converting an analog signal into a series of digital values or reversed.

schematic A diagram, drawing, or sketch that details the elements of a system, such as the elements of an electrical circuit or the elements of a logic diagram for a computer.

seed value An initial value loaded into a linear feedback shift register or random number generator.

serial
1. Pertaining to a process in which all events occur one after the other.
2. Pertaining to the sequential or consecutive occurrence of two or more related activities in a single device or channel.

set To force a bit/register to a value of logic 1.

settling time The time it takes for an output signal or value to stabilize after the input has changed from one value to another.

shift The movement of each bit in a word one position to either the left or right. For example, if the hex value 0x24 is shifted one place to the left, it becomes 0x48. If the hex value 0x24 is shifted one place to the right, it becomes 0x12.

shift register A memory storage device that sequentially shifts a word either left or right to output a stream of serial data.

sign bit The most significant binary digit, or bit, of a signed binary number. If set to a logic 1, this bit represents a negative quantity.

signal A detectable transmitted energy that can be used to carry information. As applied to electronics, any transmitted electrical impulse.

silicon ID A unique identifier of the PSoC silicon.

skew The difference in arrival time of bits transmitted at the same time, in parallel transmission.

slave device A device that allows another device to control the timing for data exchanges between two devices. Or when devices are cascaded in width, the slave device is the one that allows another device to control the timing of data exchanges between the cascaded devices and an external interface. The controlling device is called the master device.

software A set of computer programs, procedures, and associated documentation concerned with the operation of a data processing system (for example, compilers, library routines, manuals, and circuit diagrams). Software is often written first as source code, and then converted to a binary format that is specific to the device on which the code will be executed.

software reset A partial reset executed by software to bring part of the system back to a known state. A software reset will restore the M8C to a know state but not PSoC blocks, systems, peripherals, or registers. For a software reset, the CPU registers (CPU_A, CPU_F, CPU_PC, CPU_SP, and CPU_X) are set to 0x00. Therefore, code execution will begin at Flash address 0x0000.

SRAM An acronym for static random access memory. A memory device allowing users to store and retrieve data at a high rate of speed. The term static is used because, when a value has been loaded into an SRAM cell, it will remain unchanged until it is explicitly altered or until power is removed from the device.

SROM An acronym for supervisory read only memory. The SROM holds code that is used to boot the device, calibrate circuitry, and perform Flash operations. The functions of the SROM may be accessed in normal user code, operating from Flash.

stack A stack is a data structure that works on the principle of Last In First Out (LIFO). This means that the last item put on the stack is the first item that can be taken off.

stack pointer A stack may be represented in a computer's inside blocks of memory cells, with the bottom at a fixed location and a variable stack pointer to the current top cell.

state machine The actual implementation (in hardware or software) of a function that can be considered to consist of a set of states through which it sequences.

sticky A bit in a register that maintains its value past the time of the event that caused its transition, has passed.

stop bit A signal following a character or block that prepares the receiving device to receive the next character or block.

switching The controlling or routing of signals in circuits to execute logical or arithmetic operations, or to transmit data between specific points in a network.

Switch phasing The clock that controls a given switch, PHI1 or PHI2, in respect to the switch capacitor (SC) blocks. The PSoC SC blocks have two groups of switches. One group of these switches is normally closed during PHI1 and open during PHI2. The other group is open during PHI1 and closed during PHI2. These switches can be controlled in the normal operation, or in reverse mode if the PHI1 and PHI2 clocks are reversed.

synchronous

1. A signal whose data is not acknowledged or acted upon until the next active edge of a clock signal.
2. A system whose operation is synchronized by a clock signal.

T

tap The connection between two blocks of a device created by connecting several blocks/components in a series, such as a shift register or resistive voltage divider.

terminal count The state at which a counter is counted down to zero.

threshold The minimum value of a signal that can be detected by the system or sensor under consideration.

transistors The transistor is a solid-state semiconductor device used for amplification and switching, and has three terminals: a small current or voltage applied to one terminal controls the current through the other two. It is the key component in all modern electronics. In digital circuits, transistors are used as very fast electrical switches, and arrangements of transistors can function as logic gates, RAM-type memory, and other devices. In analog circuits, transistors are essentially used as amplifiers.

tri-state A function whose output can adopt three states: 0, 1, and Z (high-impedance). The function does not drive any value in the Z state and, in many respects, may be considered to be disconnected from the rest of the circuit, allowing another output to drive the same ***net***.

U

UART A UART or universal asynchronous receiver-transmitter translates between parallel bits of data and serial bits.

user The person using the PSoC device and reading this manual.

user modules Pre-build, pre-tested hardware/firmware peripheral functions that take care of managing and configuring the lower level Analog and Digital PSoC Blocks. User Modules also provide high level ***API (Application Programming Interface)*** for the peripheral function.

user space The bank 0 space of the register map. The registers in this bank are more likely to be modified during normal program execution and not just during initialization. Registers in bank 1 are most likely to be modified only during the initialization phase of the program.

V

Vdd A name for a power net meaning "voltage drain." The most positive power supply signal. Usually 5 or 3.3 volts.

volatile Not guaranteed to stay the same value or level when not in scope.

Vss A name for a power net meaning "voltage source." The most negative power supply signal.

W

watchdog timer A timer that must be serviced periodically. If it is not serviced, the CPU will reset after a specified period of time.

waveform The representation of a signal as a plot of amplitude versus time.

X

XOR See ***Boolean Algebra***.

Index

Numerics

10-bit SAR ADC controller 537
    ADC Clock Generation 537
    ADC FSM 538
    A-D-C Operation Mode 539
    ADC Sample Rate 540
    architecture 537
    Clock Selection 540
    Converted Data Format and Read Sequence 540
    Data Process 538
    Enable Voltage Doubler 540
    Interrupt 540
    Ongoing bit 540
    Ready bit 540
    register definitions 541
    SAR Algorithm 538
    Voltage Doubler Clock Generation 538
20-pin global interconnect 318
28-pin global interconnect 319
3.768 kHz clock selection 87
32 kHz clock selection 85, 97
32k Select bit 94, 296
44-pin global interconnect 320
48-pin global interconnect 321
56-pin global interconnect 322

A

ABF_CR0 register 80, 238, 420
ABUFxEN bits 80, 238
ABusMux0 bit 146
ABusMux1 bit 146
ACap bits
    in ASCxxCR0 register 161
    in ASDxxCR0 register 165
ACBxxCR0 register 157, 429
ACBxxCR1 register 159, 429
ACBxxCR2 register 160, 430
ACBxxCR3 register 156, 427
ACE_ABF_CR register
    for two column limited analog system 456
ACE_ABF_CR0 register 255
ACE_AMD_CR0 register 249
ACE_CLK_CR1 register 459
ACE_CMP_GI_EN register 455
ACExxCR1 register 256, 456
ACExxCR2 register 257, 457
ACIx bits 145, 250
ACK bit 195
ACMux bits 162
AColxMux bits 80, 238, 255
acronyms 28
ADC Clock Generation
    10-bit SAR ADC controller 537
ADC FSM
    10-bit SAR ADC controller 538
A-D-C Operation Mode
    10-bit SAR ADC controller 539
ADC Sample Rate
    10-bit SAR ADC controller 540
ADC_CR0 register 279, 543
ADC_CR1 register 280, 543
ADC_CR2 register 281, 544
ADC_CR3TRIM register 282
ADC_CR4 register 283
ADC_D register 541
ADC_DH register 153, 541
ADC_DL register 154
ADCEN bit 263
ADCx_CR register 263
ADCx_TR register 301, 454
Address bits
    in I2C_SCR register 195
address spaces, CPU core 39
addressing modes, M8C 43
ADI, *See* array digital interconnect
AEC_CLK3 register 459
AEC_LUT register 456
AEC_PWM register 458
AECx_ADC register 458
AGND_PD bit 156
AGNDBYP bit 305, 511
AINT bits 149, 251
ALT_CR0 register 243, 254, 407
ALT_CR1 register 244, 407
AMD_CR0 register 239, 405
    for two column limited analog system 454
AMD_CR1 register 242, 261, 407
    for two column limited analog system 457
amplifiers, instruction 427
AMux bits 166
AMux connections 413
AMUX_CFG register 146
AMUX_CFG1 register 246
AMUX_CLK register 285
AMUXCFG register 146, 528, 530

AMUXCFG1 register 420, 529
AMX_IN register 145, 250, 419
for two column limited analog system 454
Analog 0 bit
in INT_CLR0 register 200
in INT_MSK0 register 208
Analog 1 bit
in INT_CLR0 register 200
in INT_MSK0 register 208
Analog 2 bit
in INT_CLR0 register 200
in INT_MSK0 register 208
Analog 3 bit
in INT_CLR0 register 199
in INT_MSK0 register 208
analog array 409
AMux connections 413
analog comparator bus 416
architecture 409
BMux SC/SD connections 415
CMux connections 414
in two column limited analog system 445
NMux connections 410
PMux connections 411
RBotMux connections 412
temperature sensing 416
analog array power control bits 422
analog blocks, defining 387
analog column clock generation 394
in two column limited analog system 442
analog comparator bus interface 394, 416
in two column limited analog system 442
analog data bus interface 394
analog ground bypass 422
analog input configuration 417
6 column configuration 418
architecture 417
in two column limited analog system 446
register definitions 419
analog input, GPIO 74
analog interface 393
architecture 393
column clock generation 394
comparator bus interface 394
data bus interface 394
decimator interface 395
in two column limited analog system 441
incremental ADC interface 395
LUT function 394
modulator interface 396
register definitions 400
SAR hardware acceleration 396
synchronization interface 396
analog modulator interface 396
in two column limited analog system 444
analog mux bus 526
analog output drivers 79
architecture 79
configurations 79
register definitions 80
analog reference 421
analog ground bypass 422
architecture 421
in two column limited analog system 450
register definitions 422
analog single slope ADC in two column limited analog system 442
analog synchronization interface 396
analog system
architecture 383
characteristics 387
defining analog blocks 387
functionality 388
overview 22, 383
register naming conventions 389
register summary 389
See also two column limited analog system 441
AnalogBus bit
in ACBxxCR1 register 159
in ASCxxCR2 register 163
in ASDxxCR2 register 167
architecture 425
analog system 383
digital system 311
PSoC core 35
system resources 461
top level 22
ARefMux bits
in ASCxxCR3 register 164
in ASDxxCR3 register 168
ARF_CR register 148, 422
array digital interconnect 325
architecture 325
configuration 326
ASCxxCR0 register 161, 435
ASCxxCR1 register 162, 436
ASCxxCR2 register 163, 436
ASCxxCR3 register 164, 437
ASDxxCR0 register 165, 438
ASDxxCR1 register 166, 439
ASDxxCR2 register 167, 439
ASDxxCR3 register 168, 440
ASEx_CR0 register 457
ASExxCR0 register 258
ASign bit
in ASCxxCR0 register 161
in ASDxxCR0 register 165
ASY_CR register 150, 402
asynchronous receiver function 345
asynchronous transmitter function 345
AUTO bit 263
AutoZero bit
in ASCxxCR2 register 163
in ASDxxCR2 register 167
AVG_EN bits 188
AVS_SEL bits 188

B

bank 0 registers 127
register mapping table 110, 112, 114, 116, 118, 120, 122

bank 1 registers 218
register mapping table 111, 113, 115, 117, 119, 121, 123
basic paging in RAM paging 57
BCap bits 162, 166
BCD Code Counter
real time clock 533
BCSEL bits 181
BDG_TR register 305, 511
Bit Bang Clock bit 136
Bit Bang Mode bit 136
BMux SC/SD connections 415
BMuxSC bits 164
BMuxSD bit 168
BSW bit 168
Bus Busy bit 198
Bus Error bit 195
Bus Error IE bit 194
Bypass bit 80, 238
Byte Complete bit 196

C

Calibrate0 function in SROM 53
Calibrate1 function in SROM 53
capacitive sensing in IO analog multiplexer 526
Carry bit 62, 63, 214
CBSRC bit 263
CCap bits
in ASCxxCR2 register 163
in ASDxxCR2 register 167
chaining signals in digital blocks 337
characteristics of the PSoC device 24
in system resources 461
in the analog system 387
in the digital system 311
Checksum function in SROM 53
chip-wide analog input in IO analog multiplexer 528
CLatch bit 160
CLDIS bits 151
CLK_CR0 register 236, 264, 404
for two column limited analog system 459
CLK_CR1 register 237, 405
CLK_CR2 register 245, 408
CLK_CR3 register 400
CLK_CR3 register for analog interface 147
CLK_CR3 register for two column limited analog system 266
CLK1X bits 151
Clock Phase bit in DCCxxCR0 140, 141
Clock Polarity bit 140, 141
Clock Rate bits 194
Clock Selection
10-bit SAR ADC controller 540
clock, external digital clock 467
clock doubler 467
switch operation 467
clocking
in SROM 55
rates for I2C 499
ClockPhase bit
in ASCxxCR0 register 161
in ASDxxCR0 register 165
clocks digital, *See* digital clocks
CMOUT bit 156
CMP_CR0 register 149, 251, 401
for two column limited analog system 455
CMP_CR1 register 151, 252, 403
for two column limited analog system 455
CMP_GO_EN register 240, 406
CMP_GO_EN1 register 241, 406
CMPST bit 263
CMux connections 414
COMP bits 149, 251
CompBus bit
in ACBxxCR1 register 159
in ACExxCR1 register 256
in ASCxxCR2 register 163
in ASDxxCR2 register 167
CompCap bit 160
configuration
analog input 417
analog output drivers 79
array digital interconnect 326
decimator 483
configuration registers in digital blocks
DxCxxFN register 360
DxCxxIN register 361
DxCxxOU register 361
continuous time block 425
in two column limited analog system 450
register definitions 426
conventions, documentation
acronyms 28
numeric naming 27
register conventions 27, 109, 126
register names 126
units of measure 27
Converted Data Format and Read Sequence
10-bit SAR ADC controller 540
core, *See* PSoC core
counter for digital blocks
functionality 338
register definitions 350
timing 366
CPhase bit 160
CPU core 39
address spaces 39
addressing modes 43
instruction formats 42
instruction set summary 40–41
internal M8C registers 39
register definitions 48
CPU Sleep bit 94, 296
CPU speed settings 90, 102
CPU_F register 48, 62, 63, 72, 214
CPU_SCR0 register 101, 217, 515
CPU_SCR1 register 82, 89, 100, 216
CRCPRS for digital blocks
functionality 341

register definitions 351
timing 370
crosspoint switch in IO analog multiplexer 528
CT, *See* continuous time block
CUR_PP register 60, 189
current page pointer in RAM paging 58

D

DAC_CR register 531
DAC_CR0 register 309
DAC_CR1 register 292
DAC_D register 529
DACDATA bits 215
DACx_D register 215
data and control registers in digital blocks
DxCxxCR0 registers 353, 354, 355, 356
DxCxxDRx registers 349
Data bits
in DxCxxDR0 register 131
in DxCxxDR1 register 132
in DxCxxDR2 register 133
in I2C_DR register 197
in MACx_CL0/ACCx_DR3 register 177
in MACx_CL1/ACCx_DR2 register 178
in MACx_X/ACCx_DR1 register 175
in MACx_Y/ACCx_DR0 register 176
in MULx_DH register 173
in MULx_DL register 174
in MULx_X register 171
in MULx_Y register 172
in PRTxDR register 127
in TMP_DRx register 155
Data Process
10-bit SAR ADC controller 538
DBC0x bit
in INT_CLR1 register 202
in INT_MSK1 register 209
DBC1x bit
in INT_CLR1 register 201, 202
in INT_MSK1 register 209
DBC2x bit
in INT_CLR2 register 203
in INT_MSK2 register 207
DCC0x bit
in INT_CLR1 register 202
in INT_MSK1 register 209
DCC1x bit
in INT_CLR1 register 201
in INT_MSK1 register 209
DCC2x bit
in INT_CLR2 register 203
in INT_MSK2 register 207
DCCxxCR0 registers 140–144
dead band for digital blocks
functionality 339
kill options 340
register definitions 350
timing 367
DEC_CR0 register 212, 403, 453, 489
DEC_CR1 register 213, 267, 268, 270, 404, 453, 489
DEC_CR4 register 269
decimator 483
architecture 483
configurations 483
register definitions 488
type 2 block 483
decimator and incremental ADC interface 395
DECx_CR register 290, 492
DECx_DH register 170, 488
DECx_DL register 169, 488
DECxCR0 register 267, 490
destination instructions
direct 45
direct source direct 46
direct source immediate 45
indexed 45
indexed source immediate 46
indirect post increment 47
detailed register listing 125
development kits 26
device characteristics 24
device distinctions 25
digital blocks 335
architecture 335
asynchronous transmitter and receiver functions 345
chaining signals 337
configuration registers 360
counter function 338, 340
CRCPRS function 341
data and control registers 348
dead band function 339
DSM function 346
input clock resynchronization 336
input multiplexers 336
interrupt mask registers 359
IPWM function 340
output de-multiplexers 337
register definitions 348
SPI master function 344
SPI protocol function 343
SPI slave function 344
timer function 337
timing diagrams 363
digital blocks timing diagrams
counter timing 338, 366
CRCPRS timing 370
dead band timing 367
DSM timing 382
KILL Interrupt Generation 365
receiver timing 379
SPI mode timing 370
SPIM timing 371
SPIS timing 374
timer timing 363
transmitter timing 377
digital clocks 465
32 KHz crystal oscillator 467
architecture 465
external clock 467
internal low speed oscillator 465

internal main oscillator 465
register definitions 469
system clocking signals 465
digital IO, GPIO 73
digital system
architecture 311
characteristics 311
overview 22
register naming conventions 312
register summary 312
distinctions of the PSoC device 25
documentation
conventions 27
interpreting the analog system 387
interpreting the digital system 311
interpreting the PSoC core 35
interpreting the system resources 461
overview 21
Drive Mode 2 bits 130
DSM for digital blocks
functionality 346
register definitions 353
timing 382
DxCxxCR0 registers 134–137, 353
DxCxxCR1 registers 228–235
DxCxxDR0 register 131, 349
DxCxxDR1 register 132, 349
DxCxxDR2 register 133, 349
DxCxxFN register 222, 360
DxCxxIN register 224, 361
DxCxxOU register 226, 361

E

ECO EX bit 216
ECO EXW bit 216
ECO_TR register 91, 306
ECO, *See* external crystal oscillator
EN bit 146
Enable bit
in DCCxxCR0 register 140–144
in DxCxxCR0 register 134–137
ENABLE bit in DAC_CR0 register 309
ENABLE bits in MUX_CRx registers 291
Enable Master bit 194
Enable Slave bit 194
Enable Voltage Doubler
10-bit SAR ADC controller 540
ENSWINT bit 70, 206
EraseAll function in SROM 53
EraseBlock function in SROM 52
erasing
a block in Flash 52
user data in Flash 53
EXGAIN bit 156
EXTCLKEN bit 95, 298
external crystal oscillator 87
architecture 87
external components 88
register definitions 89
external digital clock 467
external reset 516

F

FCap bit
in ASCxxCR0 register 161
in ASDxxCR0 register 165
Flash
checksum 53
clocking strategy 55
erasing a block 52
erasing user data 53
memory organization 51
program register 308
protection 52
storing data 52
tables 53
FLS_PR1 register 54, 308
Framing Error bit 144
FSW0 bit
in ASCxxCR3 register 164
in ASDxxCR3 register 168
FSW1 bit
in ASCxxCR3 register 164
in ASDxxCR3 register 168
FullRange bit 257
functionality, analog system 388
FVal bit 258

G

Gain bit 157
GDI_E_IN register 287, 322
GDI_E_IN_CR register 272
GDI_E_OU register 289, 323
GDI_E_OU_CR register 274
GDI_O_IN register 286, 322
GDI_O_IN_CR register 271
GDI_O_OU register 288, 323
GDI_O_OU_CR register 273
GDI, *See* global digital interconnect
general purpose IO 73
analog input 74
architecture 73
block interrupts 75
digital IO 73
drive modes 77
global IO 73
interrupt modes 78
register definitions 76
General Timer
real time clock 534
getting started 26
GIE bit 63, 214
GIES bit 217
global digital interconnect 317
20-pin global interconnect 318
28-pin global interconnect 319
44-pin global interconnect 320

48-pin global interconnect 321
56-pin global interconnect 322
architecture 317
register definitions 322
global IO in GPIO 73
Global Select bits 129
GOExEN bit 186, 187
GOO2 bit 241
GOO3 bit 241
GOO6 bit 241
GOO7 bit 241
GOOxEN bit 186, 187
GPIO bit
in INT_CLR0 register 199
in INT_MSK0 register 208
GPIO block interrupts 75
GPIO, *See* general purpose IO

H

HBE bit 148
help, getting
HIGH bits 262

I

I2C system resource 493
application description 494
architecture 493
basic data transfer 494
basic IO timing 505
clock generation timing 504
clock rates 499
master clock synchronization 510
master lost arbitration timing 509
master operation 496
master restart timing 508
master stop timing 508
master timing 506
master/slave stall timing 509
register definitions 497
slave operation 494
status timing 505
I2C_ADDR register 284, 497
I2C_CFG register 194, 498
I2C_DR register 197, 502
I2C_MSCR register 198, 502
I2C_SCR register 195, 500
I2C0 bit 69, 70
in INT_CLR3 register 205
in INT_MSK3 register 206
I2C1 bit 69, 70
in INT_CLR3 register 205
in INT_MSK3 register 206
IDACMODE register 302, 531
IDX_PP register 61, 191
ILO_TR register 85, 304
ILO, *See* internal low speed oscillator
IMO_TR register 83, 303, 307
IMO, *See* internal main oscillator
incremental ADC interface 395
index memory page pointer in RAM paging 59
input for digital blocks
clock resynchronization 336
multiplexers 336
INSAMP bit 156
instruction amplifiers 427
instruction formats
1-byte instructions 42
2-byte instructions 42
3-byte instructions 43
instruction set summary 40–41
INT_CLR0 register 68, 199, 469
INT_CLR1 register 68, 201
INT_CLR2 register 68, 203
INT_CLR3 register 68, 204
INT_MSK0 register 70, 99, 208, 469
INT_MSK1 register 70, 209, 359
INT_MSK2 register 70, 207
INT_MSK3 register 70, 206
INT_VC register 71, 210
INTCAP bits 146
internal low speed oscillator 85
architecture 85
digital clock description 465
register definitions 85
internal M8C registers 39
internal main oscillator 81
architecture 81
digital clock description 465
register definitions 82
internal voltage reference 511
architecture 511
register definitions 511
Interrupt
10-bit SAR ADC controller 540
interrupt controller 65
application description 67
architecture 65
latency and priority 66
register definitions 68
Interrupt Enables bits 128
interrupt mask registers in digital blocks
INT_MSK1 register 359
interrupts in RAM paging 58
IO analog multiplexer 525
application description 526
architecture 525
capacitive sensing 526
chip-wide analog input 528
crosspoint switch 528
register definitions 528
IPWM for digital blocks
functionality 340
register definitions 351
IRAMDIS bit 216
IRANGEL bit 309
IRESS bit 216
ISx bits 181

K

KILL Interrupt Generation for digital blocks
    timing 365
KILL_INT bit 228, 232
KILL_INV bit 228
KILL_MD bit 228

L

look-up table (LUT) function 394, 442
LOREN bit 263
Lost Arb bit 195
LOW bits 262
LPCMPEN bit 156
LRB bit 195
LSb First bit 140, 141
LUT0 bits 183
LUT1 bits 182
LUT2 bits 185
LUT3 bits 184

M

M8C, *See* CPU core
MAC, *See* multiply accumulate
MACx_CL0/ACCx_DR3 register 177, 481
MACx_CL1/ACCx_DR2 register 178, 481
MACx_X/ACCx_DR1 register 175, 480
MACx_Y/ACCx_DR0 register 176, 480
mapping tables, registers 109
Master Mode bit 198
master operation, I2C 496
measurement units 27
multiply accumulate 477
    accumulation after multiplication 478
    architecture 477
    multiplication with no accumulation 478
    register definitions 478
Multi-Shot bit 228
MULx_DH register 173, 479
MULx_DL register 174, 480
MULx_X register 171, 479
MULx_Y register 172, 479
MUX_CRx register 291, 530
MuxClkGEL bit 309
MVI instructions in RAM paging 58
MVR_PP register 61, 62, 192
MVW_PP register 62, 63, 193

N

naming conventions of registers 126
NMux bits
    in ACBxxCR1 register 159
    in ACExxCR1 register 256
NMux connections 410
    in two column limited analog system 445
No Buzz bit 94, 296
numeric naming conventions 27

O

On-Chip Debug (OCD) parts 34
Ongoing bit
    10-bit SAR ADC controller 540
OSC_CR0 register 90, 94, 102, 296, 473
OSC_CR1 register 297, 474
OSC_CR2 register 82, 91, 95, 103, 298, 475
OSC_CR3 register 295, 472
OSC_CR4 register 294, 471
OSC_GO_EN register 293, 470
OSCMDL bits 309
OSCMDR bits 309
output de-multiplexers for digital blocks 337
Overrun bit 140, 141, 144
overviews
    analog system 383
    digital system 311
    register reference tables 109
    system resources 461
    this manual 21

P

Page bits
    in CUR_PP register 189
    in IDX_PP register 191
    in MVR_PP register 192
    in MVW_PP register 193
    in STK_PP register 190
Parity Enable bit 143, 144
Parity Error bit 144
Parity Type bit 143, 144
Pass Mode bit 137
Pending Interrupt bits 210
PgMode bits 62, 63, 214
phase-locked loop 93
    architecture 93
    register definitions 93
pin information, *See* pinouts
pinouts
    20-pin parts 30
    28-pin parts 31
    44-pin part 32
    48-pin parts 33
    56-pin parts 34
PLL Mode bit 94, 296
PLL, *See* phase-locked loop
PLLGAIN bit 95, 298
PMux bits
    in ACBxxCR1 register 159
    in ACExxCR1 register 256
PMux connections 411
    in two column limited analog system 446
POR and LVD 523
    architecture 523
    register definitions 523
PORS bit 217

power consumption, system resets 518
power on reset 516
product upgrades 26
ProtectBlock function in SROM 52
PRTxDM0 register 77, 218
PRTxDM1 register 77, 219
PRTxDM2 register 77, 130
PRTxDR register 76, 127
PRTxGS register 76, 129
PRTxIC0 register 77, 220
PRTxIC1 register 77, 221
PRTxIE register 76, 128
PSelect bit 194
PSoC core
  architecture 35
  overview 22
  register summary 36
PSoC device
  characteristics 24
  distinctions 25
PWM ADC interface in two column limited analog system 444
PWM_CR register 262
PWMEN bit 262
PWR bits
  in ABF_CR0 register 80, 238
  in ACBxxCR2 register 160
  in ACExxCR2 register 257
  in ARF_CR register 148
  in ASCxxCR3 register 164
  in ASDxxCR3 register 168

R

RAM paging 57
  architecture 57
  basic paging 57
  current page pointer 58
  index memory page pointer 59
  interrupts 58
  MVI instructions 58
  register definitions 60
  stack operations 58
RBotMux bits 158
RBotMux connections 412
RDI, *See* row digital interconnect
RDIxDSM register 188, 334
RDIxIS register 181, 331
RDIxLT0 register 182, 332
RDIxLT1 register 184, 332
RDIxRI register 179, 329
RDIxRO0 register 186, 333
RDIxRO1 register 187, 333
RDIxSYN register 180, 330
ReadBlock function in SROM 51
reading RTC data
  real time clock 533
Ready bit
  10-bit SAR ADC controller 540
real time clock 533
  architecture 533
  BCD Code Counter 533
  General Timer 534
  reading RTC data 533
  register definitions 534
  writing RTC data 533
receiver for digital blocks
  functionality 345
  register definitions 353
  timing 379
REF bits 148
register conventions 27, 126
register definitions
  10-bit SAR ADC controller 541
  analog input configuration 419
  analog interface 400
  analog output drivers 80
  analog reference 422
  continuous time block 426
  CPU core 48
  decimator 488
  digital blocks 348
  digital clocks 469
  external crystal oscillator 89
  general purpose IO 76
  global digital interconnect 322
  I2C 497
  internal low speed oscillator 85
  internal main oscillator 82
  internal voltage reference 511
  interrupt controller 68
  IO analog multiplexer 528
  multiply accumulate 478
  phase-locked loop 93
  POR and LVD 523
  RAM paging 60
  real time clock 534
  row digital interconnect 329
  sleep and watchdog 99
  supervisory ROM 54
  switch mode pump 521
  switched capacitor block 434
  system resets 514
  two column limited analog system 452
register mapping tables
  bank 0 registers 110, 112, 114, 116, 118, 120, 122
  bank 1 registers 111, 113, 115, 117, 119, 121, 123
register reference 109
  mapping tables 110–123
registers
  analog register summary 389
  bank 0 registers 127
  bank 1 registers 218
  core register summary 36
  detail of all registers 125
  digital register summary 312
  internal M8C registers 39
  maneuvering around 125
  mapping tables 109
  system resources register summary 462
  two column limited analog system register summary 452
RES_WDT register 99, 211

Restart Gen bit 198
RIx bits 179
RIxSYN bits 180
row digital interconnect 327
    architecture 327
    register definitions 329
    timing diagram 334
RTapMux bits 157
RTC bit
    in INT_CLR3 register 204
    in INT_MSK3 register 206
RTC, *See* real time clock
RTCCR register 278
RTCH register 275
RTCM register 276
RTCS register 277
RTopMux bit 157
RTopMux1 bit 156
RX Active bit 144
RX Reg Full bit 140, 141, 144

S

SAR Algorithm
    10-bit SAR ADC controller 538
SAR hardware acceleration 396
SARADC bit
    in INT_CLR3 register 204
    in INT_MSK3 register 206
SARADC_CR3TRIM register 544
SARADC_CR4 register 544
SARCNT bits 150
SARCOL bits 150
SARSIGN bit 150
SC type C control registers 435
SC type D control registers 438
SC, *See also* switched capacitor block
SEL2 bits 241
SEL3 bits 241
SHEN bit 263
Sinc2 function 484
slave operation, I2C 494
sleep and watchdog 97
    32 kHz clock selection 97
    application description 98
    architecture 97
    CPU speed settings 102
    register definitions 99
    sleep internal selections 102
    sleep timer 97
Sleep bit 94, 296
    in CPU_SCR0 register 217
    in INT_CLR0 register 199
    in INT_MSK0 register 208
sleep interval selections 90, 102
sleep timer 97
SLIMO bit 81, 216
SLP_EXTEND bit 298
SMP, *See* switch mode pump
source instructions
    direct 44
    immediate 43
    indexed 44
    indirect post increment 47
SPI Complete bit 140, 141
SPI for digital blocks
    master function 344
    master register 352
    mode timing 370
    protocol function 343
    slave function 344
    slave register 352
SPIM timing for digital blocks 371
SPIS timing for digital blocks 374
SplitMux bit 309
SROM, *See* supervisory ROM
stack operations in RAM paging 58
Start Gen bit 198
started, getting 26
STK_PP register 61, 190
STOP bit 217
Stop IE bit 194
Stop Status bit 195
storing data in Flash 52
summary of registers
    analog system 389
    digital system 312
    mapping tables 109
    PSoC core 36
    system resources 462
    two column limited analog system 452
supervisory ROM
    architecture 49
    Calibrate0 function 53
    Calibrate1 function 53
    Checksum function 53
    clocking 55
    EraseAll function 53
    EraseBlock function 52
    function descriptions 50
    KEY function variables 49
    list of SROM functions 49
    ProtectBlock function 52
    ReadBlock function 51
    register definitions 54
    SWBootReset function 50
    TableRead function 52
    WriteBlock function 52
support 26
SWBootReset function in SROM 50
switch mode pump 519
    application description 520
    architecture 519
    register definitions 521
switched capacitor block 431
    application description 433
    architecture 431
    in two column limited analog system 450
    register definitions 434
    SC type C control registers 435
    SC type D control registers 438

SYNCEN bit 150
SYSCLKX2DIS bit 95, 298
system resets 513
  architecture 513
  functional details 518
  power consumption 518
  power on reset 516
  register definitions 514
  timing diagrams 516
  watchdog timer reset 516
system resources
  architecture 461
  characteristics 461
  overview 22, 461
  register summary 462

T

TableRead function in SROM 52
temperature sensing in analog 416, 446
TestMux bits 160
timer for digital blocks
  functionality 337
  register definitions 349
  timing 363
timing diagrams
  digital blocks 363
  I2C 504
  row digital interconnect 334
  system resets 516
TMP_DRx register 60, 155
TMUXEN bit 160
Transmit bit 195
transmitter for digital blocks
  functionality 345
  register definition 352
  timing 377
TSCMPH register 260, 542
TSCMPL register 259, 542
TSCR0 register 247, 541
TSCR1 register 248, 542
two column limited analog system 441
  analog array 445
  analog comparator bus interface 442
  analog input configuration 446
  analog interface 441
  analog reference 450
  architecture 441
  column clock generation 442
  continuous time block 450
  device distinctions 450
  LUT function 442
  modulator interface 444
  NMux connections 445
  PMux connections 446
  PWM ADC interface 444
  register definitions 452
  sample and hold feature 444
  single slope ADC 442
  switched capacitor block 450
  temperature sensing 446
TX Complete bit 143
TX Reg Empty bit 140–143
type 2 decimator block 483

U

UART function 335
units of measure 27
upgrades 26

V

V Monitor bit
  in INT_CLR0 register 200
  in INT_MSK0 register 208
VC3 bit
  in INT_CLR0 register 199
  in INT_MSK0 register 208
VLT_CMP register 300, 524
VLT_CR register 299, 521, 523
Voltage Doubler Clock Generation
  10-bit SAR ADC controller 538

W

watchdog timer reset 516
WDR32_SE bit 298
WDRS bit 217
WDSL_Clear bits 211
WriteAndVerify function in SROM 54
WriteBlock function in SROM 52
writing RTC data
  real time clock 533

X

XIO bit 62, 63, 214
XRES reset 516

Z

Zero bit 62, 63, 214