MB39C326-EVBSK-01/02

6MHz Buck-boost DC/DC Converter Evaluation Board Operation Guide

Doc. No. 002-08675 Rev. *B

Cypress Semiconductor
198 Champion Court
San Jose, CA 95134-1709
http://www.cypress.com

© Cypress Semiconductor Corporation, 2015-2018. This document is the property of Cypress Semiconductor Corporation and its subsidiaries, including Spansion LLC (“Cypress”). This document, including any software or firmware included or referenced in this document (“Software”), is owned by Cypress under the intellectual property laws and treaties of the United States and other countries worldwide. Cypress reserves all rights under such laws and treaties and does not, except as specifically stated in this paragraph, grant any license under its patents, copyrights, trademarks, or other intellectual property rights. If the Software is not accompanied by a license agreement and you do not otherwise have a written agreement with Cypress governing the use of the Software, then Cypress hereby grants you a personal, non-exclusive, nontransferable license (without the right to sublicense) (1) under its copyright rights in the Software (a) for Software provided in source code form, to modify and reproduce the Software solely for use with Cypress hardware products, only internally within your organization, and (b) to distribute the Software in binary code form externally to end users (either directly or indirectly through resellers and distributors), solely for use on Cypress hardware product units, and (2) under those claims of Cypress’s patents that are infringed by the Software (as provided by Cypress, unmodified) to make, use, distribute, and import the Software solely for use with Cypress hardware products. Any other use, reproduction, modification, translation, or compilation of the Software is prohibited.

TO THE EXTENT PERMITTED BY APPLICABLE LAW, CYPRESS MAKES NO WARRANTY OF ANY KIND, EXPRESS OR IMPLIED, WITH REGARD TO THIS DOCUMENT OR ANY SOFTWARE OR ACCOMPANYING HARDWARE, INCLUDING, BUT NOT LIMITED TO, THE IMPLIED WARRANTIES OF MERCHANTABILITY AND FITNESS FOR A PARTICULAR PURPOSE. No computing device can be absolutely secure. Therefore, despite security measures implemented in Cypress hardware or software products, Cypress does not assume any liability arising out of any security breach, such as unauthorized access to or use of a Cypress product. In addition, the products described in these materials may contain design defects or errors known as errata which may cause the product to deviate from published specifications. To the extent permitted by applicable law, Cypress reserves the right to make changes to this document without further notice. Cypress does not assume any liability arising out of the application or use of any product or circuit described in this document. Any information provided in this document, including any sample design information or programming code, is provided only for reference purposes. It is the responsibility of the user of this document to properly design, program, and test the functionality and safety of any application made of this information and any resulting product. Cypress products are not designed, intended, or authorized for use as critical components in systems designed or intended for the operation of weapons, weapons systems, nuclear installations, life-support devices or systems, other medical devices or systems (including resuscitation equipment and surgical implants), pollution control or hazardous substances management, or other uses where the failure of the device or system could cause personal injury, death, or property damage (“Unintended Uses”). A critical component is any component of a device or system whose failure to perform can be reasonably expected to cause the failure of the device or system, or to affect its safety or effectiveness. Cypress is not liable, in whole or in part, and you shall and hereby do release Cypress from any claim, damage, or other liability arising from or related to all Unintended Uses of Cypress products. You shall indemnify and hold Cypress harmless from and against all claims, costs, damages, and other liabilities, including claims for personal injury or death, arising from or related to any Unintended Uses of Cypress products.

Cypress, the Cypress logo, Spansion, the Spansion logo, and combinations thereof, WICED, PSoC, CapSense, EZ-USB, F-RAM, and Traveo are trademarks or registered trademarks of Cypress in the United States and other countries. For a more complete list of Cypress trademarks, visit cypress.com. Other names and brands may be claimed as property of their respective owners.

Preface

This manual explains how to use the evaluation board. Be sure to read this manual before using the product. For this product, please consult with sales representatives or support representatives.

Handling and use

Handling and use of this product and notes regarding its safe use are described in the manuals.

Follow the instructions in the manuals to use this product.

Keep this manual at hand so that you can refer to it anytime during use of this product.

Notice on this document

All information included in this document is current as of the date it is issued. Such information is subject to change without any prior notice.

Please confirm the latest relevant information with the sales representatives.

Cautions

Caution of the products described in this document

The following precautions apply to the product described in this manual.

⚠ **WARNING**	Indicates a potentially hazardous situation which could result in death or serious injury and/or a fault in the user's system if the product is not used correctly.

Electric shock, **Damage**	Before performing any operation described in this manual, turn off all the power supplies to the system. Performing such an operation with the power on may cause an electric shock or device fault.
Electric shock, **Damage**	Once the product has been turned on, do not touch any metal part of it. Doing so may cause an electric shock or device fault.

⚠ **CAUTION**	Indicates the presence of a hazard that may cause a minor or moderate injury, damages to this product or devices connected to it, or may cause to lose software resources and other properties such as data, if the device is not used appropriately.

Cuts, Damage	Before moving the product, be sure to turn off all the power supplies and unplug the cables. Watch your step when carrying the product. Do not use the product in an unstable location such as a place exposed to strong vibration or a sloping surface. Doing so may cause the product to fall, resulting in an injury or fault.
Cuts	The product contains sharp edges that are left unavoidably exposed, such as jumper plugs. Handle the product with due care not to get injured with such pointed parts.
Damage	Do not place anything on the product or expose the product to physical shocks. Do not carry the product after the power has been turned on. Doing so may cause a malfunction due to overloading or shock.
Damage	Since the product contains many electronic components, keep it away from direct sunlight, high temperature, and high humidity to prevent condensation. Do not use or store the product where it is exposed to much dust or a strong magnetic or electric field for an extended period of time. Inappropriate operating or storage environments may cause a fault.
Damage	Use the product within the ranges given in the specifications. Operation over the specified ranges may cause a fault.
Damage	To prevent electrostatic breakdown, do not let your finger or other object come into contact with the metal parts of any of the connectors. Before handling the product, touch a metal object (such as a door knob) to discharge any static electricity from your body.

Damage	When turning the power on or off, follow the relevant procedure as described in this document. Before turning the power on, in particular, be sure to finish making all the required connections. Furthermore, be sure to configure and use the product by following the instructions given in this document. Using the product incorrectly or inappropriately may cause a fault.
Damage	Always turn the power off before connecting or disconnecting any cables from the product. When unplugging a cable, unplug the cable by holding the connector part without pulling on the cable itself. Pulling the cable itself or bending it may expose or disconnect the cable core, resulting in a fault.
Damage	Because the product has no casing, it is recommended that it be stored in the original packaging. Transporting the product may cause a damage or fault. Therefore, keep the packaging materials and use them when re-shipping the product.

Contents

1. Description 7

2. Evaluation Board Specification 8

3. Block Diagram 9

4. PIN Descriptions 11

4.1 Input/Output Pin Descriptions 11
4.2 Jumper Descriptions 11
4.3 Setup and Verification 12

5. Component and Wiring Layout 13

5.1 Component Layout 13
5.2 Wiring Layout 15

6. Schematic Circuit 16

7. Component List 18

8. Evaluation Board Picture 19

9. Ordering Information 20

Revision History 21

Document Revision History 21

1. Description

The MB39C326-EVBSK-01/02 is the small size evaluation board for the 6MHzBuck-boost DC/DC converter IC, MB39C326. This evaluation board output preset 3.3V or can be selected the other values by DAC signal input. The board consists of simple two layers. Two different function of boards lineup: MB39C326-EVBSK-01 for power save mode and MB39C326-EVBSK-02 for fixed PWM.

Figure 1-1. Board Outline

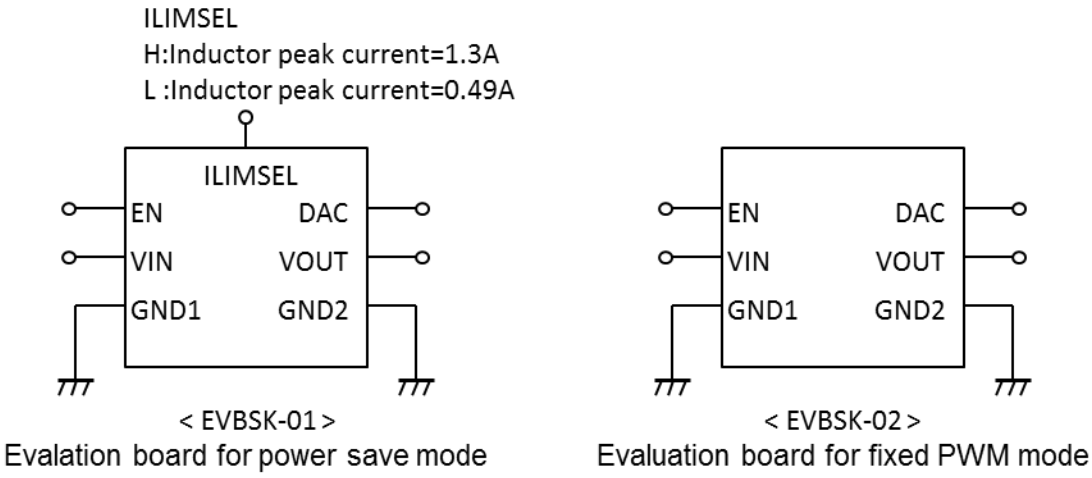

2. Evaluation Board Specification

Table 2-1. Evaluation Board Specification

Item	Symbol	Condition	Min	Typ	Max	Unit
Input voltage	VIN	-	2.5	3.7	5.5	V
Output voltage	VOUT	R1=620kΩ, R2=110kΩ	3.185	3.318	3.451	V
Output current	IOUT(MAX1)	VIN=3.3V to 5.5V, EVBSK-02	-	-	1200	mA
	IOUT(MAX2)	VIN=2.5Vto 3.3V, EVBSK-02	-	-	800	mA
	IOUT(MAX3)	VIN=3.3V to 5.5V, EVBSK-01, ILIMSEL=H	-	-	600	mA
	IOUT(MAX4)	VIN=2.5V to 3.3V, EVBSK-01, ILIMSEL=H	-	-	500	mA
Switching frequency	FREQUENCY	-	5.2	5.8	6.4	MHz
Maximum efficiency	EFFICIENCY	-	-	93	-	%
Signal input threshold voltage	VIL	EN, ILIMSEL	0.0	-	0.25	V
	VIH		1.5	-	VIN	V

3. Block Diagram

Figure 3-1. Block Diagram for EVBSK-01

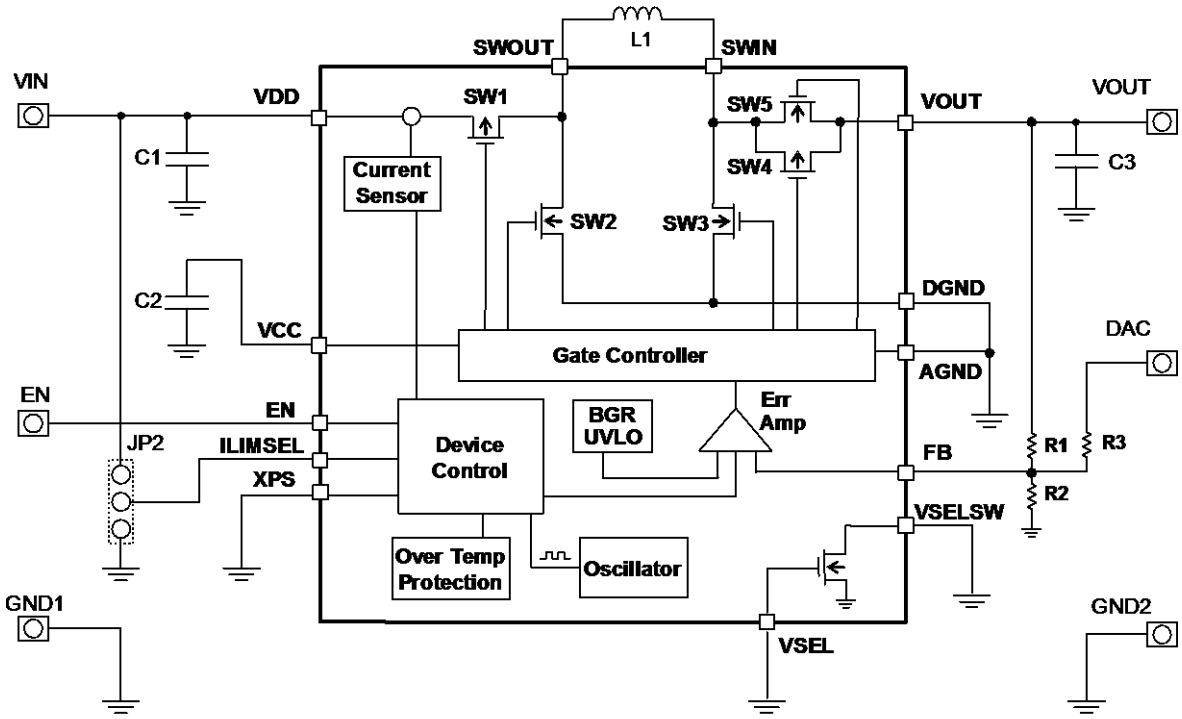

<EVBSK-01>

Figure 3-2. Block Diagram for EVBSK-02

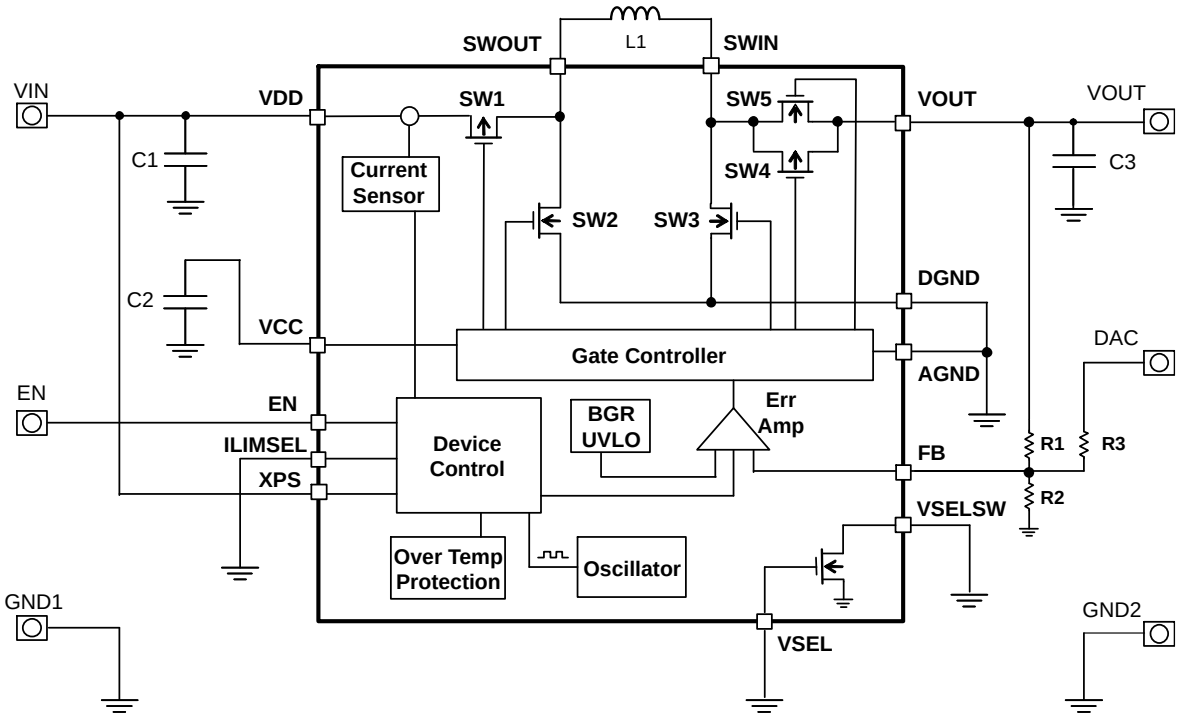

< EVBSK-02 >

4. PIN Descriptions

4.1 Input/Output Pin Descriptions

Table 4-1. Input/Output Pin Descriptions

Terminal	I/O	Description
VIN	I	Power supply terminal
VOUT	O	Output terminal
EN	I	IC enable terminal EN=H : Enable EN=L : Shutdown
DAC	I	Output voltage setting terminal (DAC signal input)(*1)
ILIMSEL	I	Inductor peak current select terminal (EVBSK-01)(*2) ILIMSEL=H : Inductorpeak current value(I_{PK})= 1.3A ILIMSEL=L : Inductor peak current value(I_{PK})= 0.49A
GND1	-	Input GND terminal
GND2	-	Output GND terminal

*1: Please refer the MB39C326 datasheet for setting output voltage by DAC.

*2: EVBSK-01: MB39C326 XPS pin is set to L, ILIMSEL pin is set to H and output current limit value(I_{PK})= 1.3A at ILIMSEL=H and 0.49A at ILIMSEL=L.
EVBSK-02: MB39C326 XPS pin is set to H, ILIMSEL pin is set to L and inductor peak current value(I_{PK})= 3.2A.

4.2 Jumper Descriptions

Table 4-2. Jumper Descriptions

Jumper	Description	Initial
JP2	H: MB39C326 ILIMSEL pin is short to VIN. (L) : MB39C326 ILIMSEL pin is shorted to GND.	Short to VIN

4.3 Setup and Verification

1. Connect the power supply between VIN and GND1. EN is connected to VIN.
2. 3.3V is output to VOUT terminal after power is supplied.

Low impedance power supply is recommended to use. The power supply line can be stable at evaluation when some capacitor is connected to the line.

Figure 4-1. Image of Connection

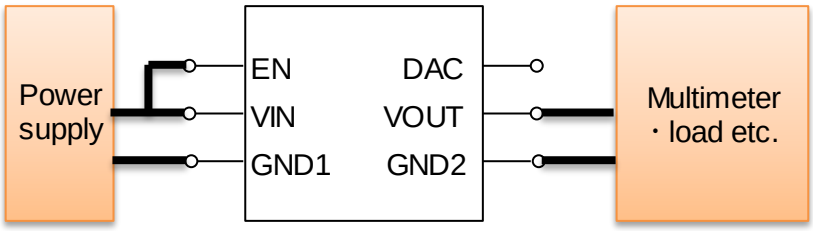

5. Component and Wiring Layout

5.1 Component Layout

Figure 5-1. Component Layout (Layer 1)

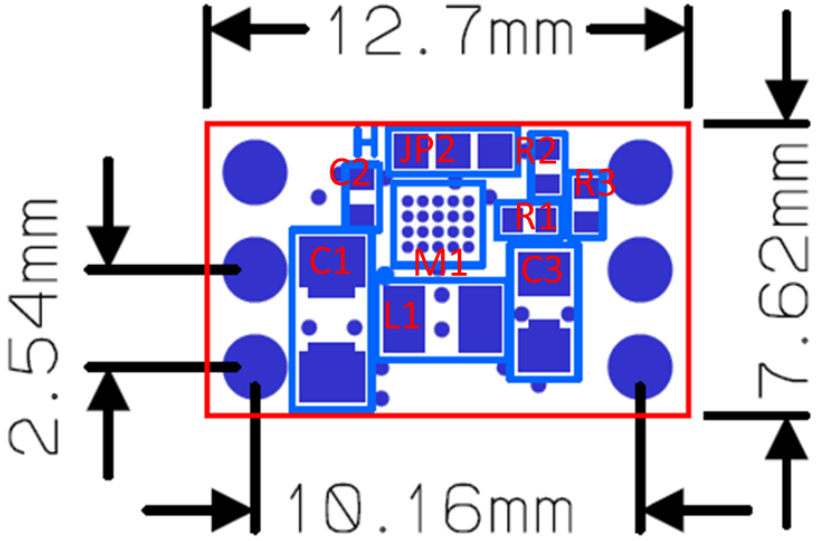

<EVBSK-01>

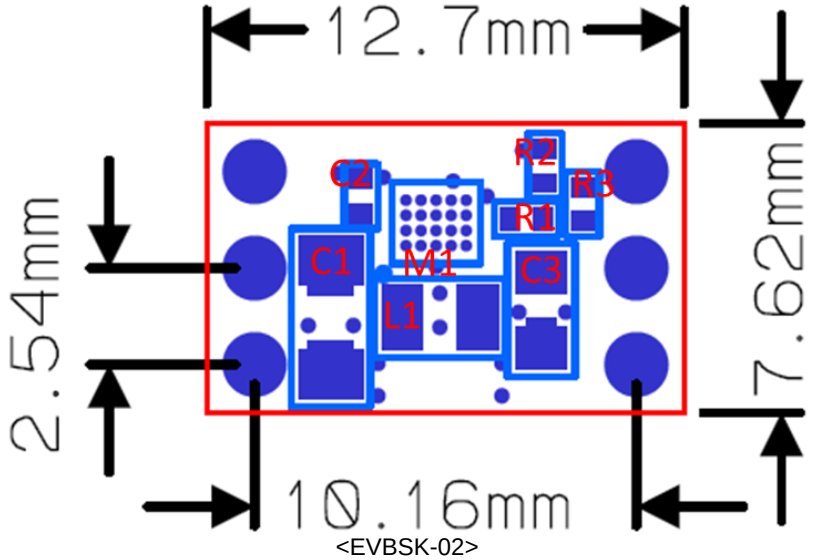

<EVBSK-02>

Figure 5-2. Component Layout (Layer 2, Top View)



<EVBSK-01>

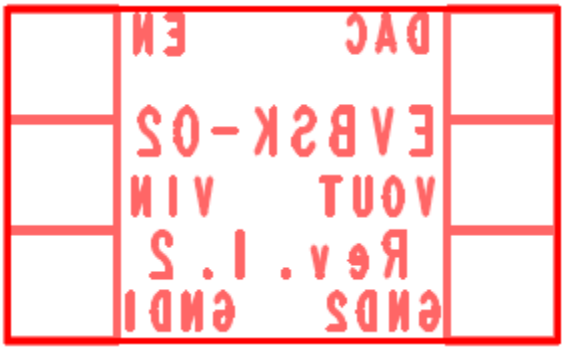

<EVBSK-02>

5.2 Wiring Layout

Figure 5-3. Wiring Layout (Layer 1)

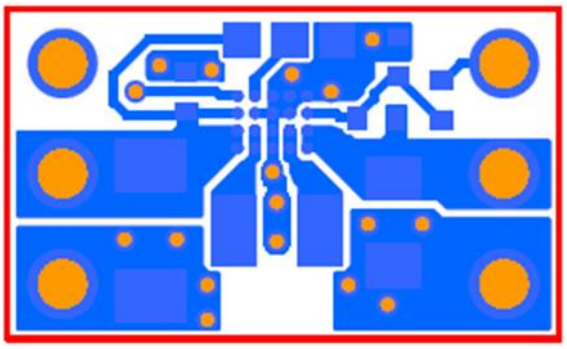

<EVBSK-01>

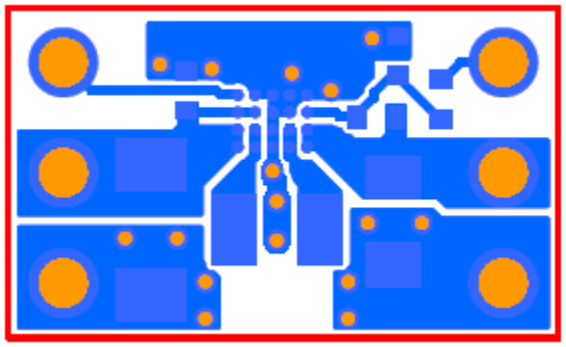

<EVBSK-02>

Figure 5-4. Wiring Layout (Layer 2, Top View)

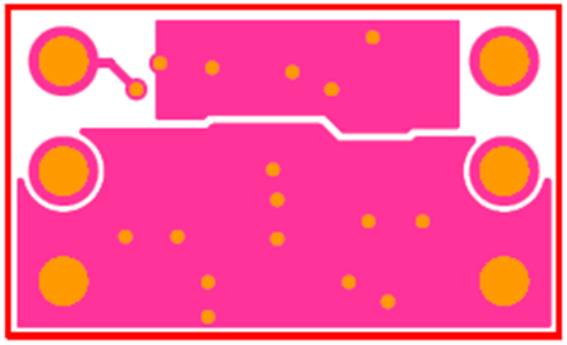

<EVBSK-01/02>

6. Schematic Circuit

Figure 6-1. Schematic Circuit for Power Save Mode

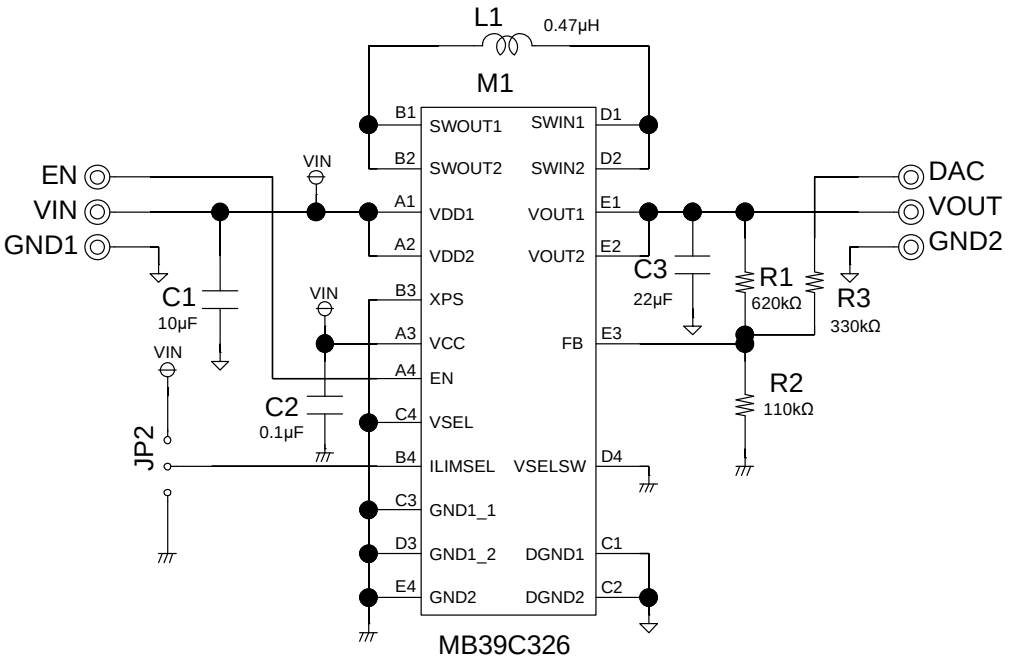

Figure 6-2. Schematic Circuit for Fixed PWM Mode

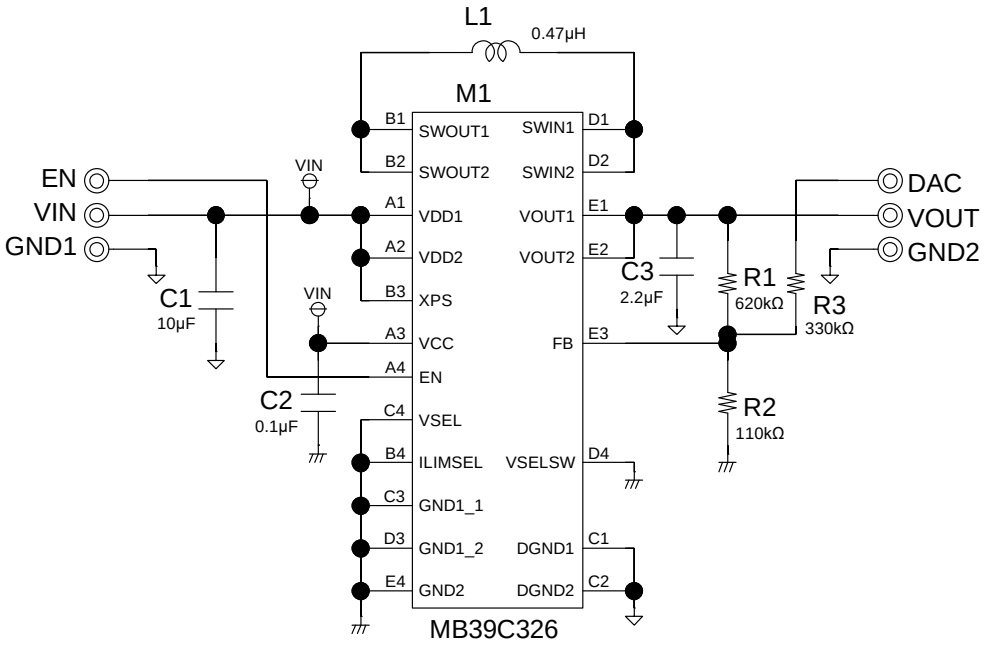

7. Component List

Table 7-1. Component List

No.	Component	Item	Parts Number	Vendor	Value	Remarks
1	M1	PMIC	MB39C326	Cypress	-	
2	L1	Inductor	GLCHKR4701A	ALPS	0.47µH	35mΩ, 3.7A
3	C1	Ceramic Capacitor	EMK107BBJ106MA-T	TAIYO YUDEN	10µF	16V, X5R, 1608
4	C2	Ceramic Capacitor	UMK105BJ104KV-F	TAIYO YUDEN	0.1µF	50V, X5R, 1005
5	C3	Ceramic Capacitor	EMK105ABJ225MV-F	TAIYO YUDEN	2.2µF	16V, X5R, 1005, EVBSK-02
		Ceramic Capacitor	JMK107BBJ226MA-T	TAIYO YUDEN	22µF(*1)	6.3V, X5R, 1608, EVBSK-01
6	R1	Chip Resistor	RK73H1ETTP6203F	KOA	620kΩ	±1.0%
7	R2	Chip Resistor	RK73H1ETTP1103F	KOA	110kΩ	±1.0%
8	R3	Chip Resistor	RK73H1ETTP3303F	KOA	330kΩ	±1.0%
9	JP2	Solder jumper	JPPAD	-	-	H (Short to VIN)

ALPS :Alps Green Devices Co., Ltd
TAIYO YUDEN :Taiyo Yuden Co., LTD
KOA :KOA Corporation

These components are compliant with RoHS.Please ask each vendor for details if necessary.

*1: EVBSK-01 operates by PFM mode at light load. Large output capacitor (around 22µF) is recommended to reduce the output ripple voltage.

8. Evaluation Board Picture

Figure 8-1. Picture of MB39C326-EVBSK-01

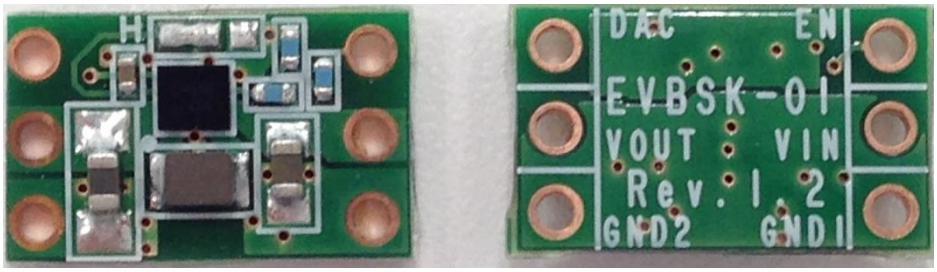

<TOP> <BOTTOM>

Figure 8-2. Picture of MB39C326-EVBSK-02

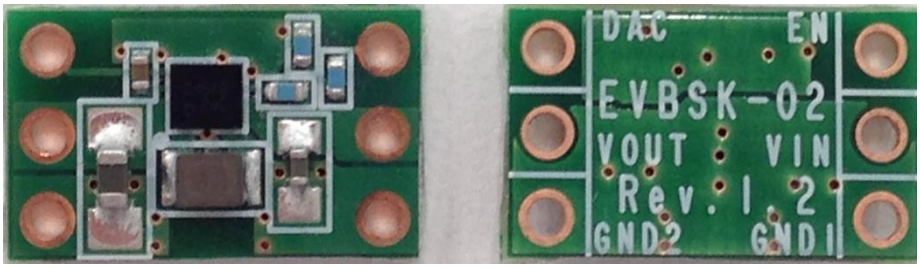

<TOP> <BOTTOM>

9. Ordering Information

Table 9-1. Ordering Information

Part Number	EVB Revision	Note
MB39C326-EVBSK-01	Rev 1.2	---
MB39C326-EVBSK-02	Rev 1.2	---

Revision History

Document Revision History

Document Title: MB39C326-EVBSK-01/02 6MHz Buck-boost DC/DC Converter Evaluation Board Operation Guide Document Number: 002-08675			
Revision	**Issue Date**	**Origin of Change**	**Description of Change**
**	06/19/2015	ATTS	**Revision 01:** Initial release
			Revision 02: Section 7 ” Component List” Revised the Component of Component list GLC series → GLCHKR4701A
			Section 8 “Evaluation Board Picture” Inserted board pictures
*A	02/05/2016	ATTS	Migrated Spansion Guide from MB39C326-EVBSK-01/02_SS901-00022-2v0-E to Cypress format
*B	06/11/2018	ATTS	Updated Cypress Logo and Copyright year. Completing Sunset review.