Please note that Cypress is an Infineon Technologies Company.
The document following this cover page is marked as “Cypress” document as this is the company that originally developed the product. Please note that Infineon will continue to offer the product to new and existing customers as part of the Infineon product portfolio.

Continuity of document content
The fact that Infineon offers the following product as part of the Infineon product portfolio does not lead to any changes to this document. Future revisions will occur when appropriate, and any changes will be set out on the document history page.

Continuity of ordering part numbers
Infineon continues to support existing part numbers. Please continue to use the ordering part numbers listed in the datasheet for ordering.

MB2100-01A-E

Single Port Embedded Emulator Debugger SPEED-BOX Operation Guide

Doc. # 002-05542 Rev. *A

Cypress Semiconductor
198 Champion Court
San Jose, CA 95134-1709

Phone (USA): 800.858.1810
Phone (Intnl): +1.408.943.2600
www.cypress.com

Copyrights

© Cypress Semiconductor Corporation, 2008-2016. This document is the property of Cypress Semiconductor Corporation and its subsidiaries, including Spansion LLC (“Cypress”). This document, including any software or firmware included or referenced in this document (“Software”), is owned by Cypress under the intellectual property laws and treaties of the United States and other countries worldwide. Cypress reserves all rights under such laws and treaties and does not, except as specifically stated in this paragraph, grant any license under its patents, copyrights, trademarks, or other intellectual property rights. If the Software is not accompanied by a license agreement and you do not otherwise have a written agreement with Cypress governing the use of the Software, then Cypress hereby grants you a personal, non-exclusive, nontransferable license (without the right to sublicense) (1) under its copyright rights in the Software (a) for Software provided in source code form, to modify and reproduce the Software solely for use with Cypress hardware products, only internally within your organization, and (b) to distribute the Software in binary code form externally to end users (either directly or indirectly through resellers and distributors), solely for use on Cypress hardware product units, and (2) under those claims of Cypress's patents that are infringed by the Software (as provided by Cypress, unmodified) to make, use, distribute, and import the Software solely for use with Cypress hardware products. Any other use, reproduction, modification, translation, or compilation of the Software is prohibited.

TO THE EXTENT PERMITTED BY APPLICABLE LAW, CYPRESS MAKES NO WARRANTY OF ANY KIND, EXPRESS OR IMPLIED, WITH REGARD TO THIS DOCUMENT OR ANY SOFTWARE OR ACCOMPANYING HARDWARE, INCLUDING, BUT NOT LIMITED TO, THE IMPLIED WARRANTIES OF MERCHANTABILITY AND FITNESS FOR A PARTICULAR PURPOSE. To the extent permitted by applicable law, Cypress reserves the right to make changes to this document without further notice. Cypress does not assume any liability arising out of the application or use of any product or circuit described in this document. Any information provided in this document, including any sample design information or programming code, is provided only for reference purposes. It is the responsibility of the user of this document to properly design, program, and test the functionality and safety of any application made of this information and any resulting product. Cypress products are not designed, intended, or authorized for use as critical components in systems designed or intended for the operation of weapons, weapons systems, nuclear installations, life-support devices or systems, other medical devices or systems (including resuscitation equipment and surgical implants), pollution control or hazardous substances management, or other uses where the failure of the device or system could cause personal injury, death, or property damage (“Unintended Uses”). A critical component is any component of a device or system whose failure to perform can be reasonably expected to cause the failure of the device or system, or to affect its safety or effectiveness. Cypress is not liable, in whole or in part, and you shall and hereby do release Cypress from any claim, damage, or other liability arising from or related to all Unintended Uses of Cypress products. You shall indemnify and hold Cypress harmless from and against all claims, costs, damages, and other liabilities, including claims for personal injury or death, arising from or related to any Unintended Uses of Cypress products.

Cypress, the Cypress logo, Spansion, the Spansion logo, and combinations thereof, PSoC, CapSense, EZ-USB, F-RAM, and Traveo are trademarks or registered trademarks of Cypress in the United States and other countries. For a more complete list of Cypress trademarks, visit cypress.com. Other names and brands may be claimed as property of their respective owners.

Preface

SPEED-BOX *1 (MB2100-01A-E) is a development support tool for development and evaluation of application products that use a microcontroller that supports JPwire *2.

JPwire is a standard of the single wire debugger designed by General Incorporated Association JASPAR. SPEED-BOX complies with JPwire requirements.

This document describes the product handling and connection of this product for engineers who are developing application products for the Cypress microcontrollers*3 using SPEED-BOX.

SPEED-BOX is a trademark of Cypress Semiconductor Corp.

JPwire is a registered trademark of General Incorporated Association JASPAR.

Referred to as the “MCU”

- Using the product safely

This manual contains important information for using this product safely. Be sure to read this manual before using the product, and to follow the directions given in this manual in order to use the product correctly.

In particular, thoroughly read the “Caution of the product described in this manual” at the start of this document, and perform a thorough safety check before using the product.

Store this manual in a safe location where it can easily be accessed at any time while you are using the product.

- Warranty and Liability Disclaimers

The specifications of the product are subject to change without notice.

Cypress assumes no liability for any loss or damage whatsoever directly or indirectly arising out of the use of the product.

- Related manuals

You should refer to the following manuals as well:

Hardware manual of the MCU

“Softune Workbench Operation Manual”

- European RoHS compliance

Products with a -E suffix on the part number are European RoHS compliant products.

- Notice on this document

All information included in this document is current as of the date it is issued. Such information is subject to change without any prior notice.

Please confirm the latest relevant information with the sales representatives.

- RealTime OS

This product uses the mT-Kernel source code under the mT-License of the T-Engine forum (www.t-engine.org).

- Caution of the product described in this manual

The following precautions apply to the product described in this manual.

WARNING	Indicates a potentially hazardous situation which could result in death or serious injury and/or a fault in the user's system if the product is not used correctly.

Electric shock, Damage	Before performing any operation described in this manual, turn off all the power supplies to the system. Performing such an operation with the power on may cause an electric shock or device fault.
Electric shock, Damage	Once the product has been turned on, do not touch any metal part of it. Doing so may cause an electric shock or device fault.

CAUTION	Indicates the presence of a hazard that may cause a minor or moderate injury, damages to this product or devices connected to it, or may cause to loose software resources and other properties such as data, if the device is not used appropriately.

Cuts, Damage	Before moving the product, be sure to turn off all the power supplies and unplug the cables. Watch your step when carrying the product. Do not use the product in an unstable location such as a place exposed to strong vibration or a sloping surface. Doing so may cause the product to fall, resulting in an injury or fault.
Damage	Do not place anything on the product or expose the product to physical shocks. Do not carry the product after the power has been turned on. Doing so may cause a malfunction due to overloading or shock.
Damage	Since the product contains many electronic components, keep it away from direct sunlight, high temperature, and high humidity to prevent condensation. Do not use or store the product where it is exposed to much dust or a strong magnetic or electric field for an extended period of time. Inappropriate operating or storage environments may cause a fault.
Damage	Use the product within the ranges given in the specifications. Operation over the specified ranges may cause a fault.
Damage	To prevent electrostatic breakdown, do not let your finger or other object come into contact with the metal parts of any of the connectors. Before handling the product, touch a metal object (such as a door knob) to discharge any static electricity from your body.
Damage	Always turn the power off before connecting or disconnecting any cables from the product. When unplugging a cable, unplug the cable by holding the connector part without pulling on the cable itself. Pulling the cable itself or bending it may expose or disconnect the cable core, resulting in a fault.
Damage	It is recommended that it be stored in the original packaging. Transporting the product may cause a damage or fault. Therefore, keep the packaging materials and use them when re-shipping the product.

Contents

1. Product Description 7

1.1 Checking the delivered product 7
1.2 Appearance and part names 8
1.3 Optional parts 9
1.4 Debug interface cable 10
1.4.1 Debug interface cable 10
1.4.2 Coupling connectors 11
1.4.3 Small form connectors 12
1.5 Specifications 13
1.5.1 General specifications 13
1.5.2 USB circuit specifications 14
1.5.3 Power supply isolation specifications 15

2. Connecting the SPEED-BOX 16

2.1 System configuration 16
2.2 Connecting the SPEED-BOX to the user system 17
2.3 Connecting the SPEED-BOX to the host computer 18

3. Operating Procedures 19

3.1 Power on and power off procedures 19

4. User System Board Design Guidelines 21

4.1 Circuit board design rules 21
4.2 Handling the coaxial cable when using a general purpose connector 23

5. Cautions 24

6. Major Changes 25

Revision History 26

1. Product Description

1.1 Checking the delivered product

Before using the product, confirm that the following components are included in the box:

- SPEED-BOX unit : 1
- USB cable (KM66L-4030-0960: Asahi-Tsushin Co., Ltd.) : 1
  with a piece of Clump filter.
- Debug interface cable (2m) (MB2100-201-E) : 1
  with a piece of Clump filter.
- Coaxial connector
  (HRM-300-126B (40): HIROSE ELECTRIC CO., LTD.) : 1
- Operation manual (English version, this manual) : 1
- Operation manual (Japanese version) : 1

Note:

This product is available upon request. To request the product, please contact Cypress Sales for more information.

For additional information, please visit our website:

www.cypress.com/contact-us.

1.2 Appearance and part names

The external appearance and component names of the SPEED-BOX are shown in Figure 1-1.

Figure 1-1. External appearance of the SPEED-BOX unit

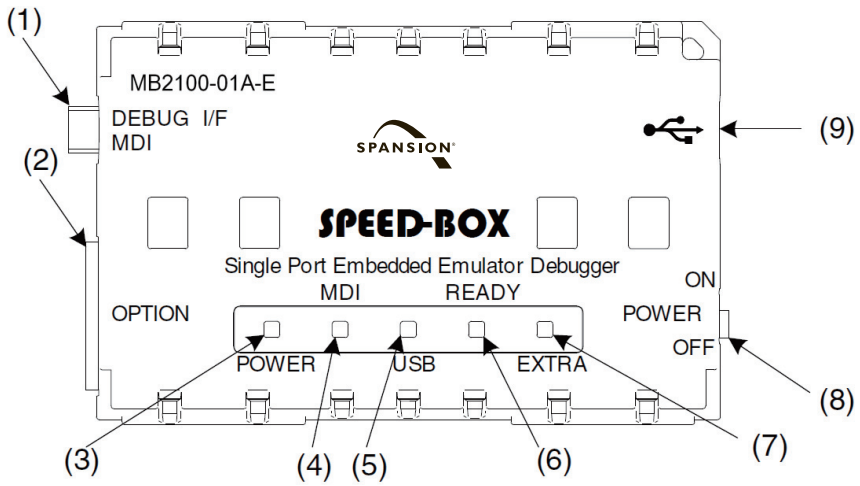

No.	Name	Description
(1)	MDI connector	Connects to the user system using the debug interface cable. The designation of the MCU connector which is connected with this connector is DEBUG I/F or MDI.
(2)	Option connector	Connector for connecting to optional components. This connector also doubles as the product maintenance port. Take care to avoid touching metal parts of this connector with your hand or other objects when the connector is not connected.
(3)	POWER LED	This light is on when the power is on and off when the power is off. The light is off when the USB suspended.
(4)	MDI LED	Do not use.
(5)	USB LED	Indicates the communication status of the USB bus. The light turns on during communication.
(6)	READY LED	This light turns on when the SPEED-BOX and the host computer are able to communicate.
(7)	EXTRA LED	Do not use.
(8)	POWER switch	Turns the power to the SPEED-BOX on and off.
(9)	USB connector	Connects to the host computer using a USB cable.

1.3 Optional parts

The optional parts for this product are shown in Table 1-1.

Table 1-1. Optional parts

Name	Part Number
Debug interface cable (2m)*1	MB2100-201-E *3
Debug interface cable (5m)*2	MB2100-202-E *3

*1: The cable length is 2m. The maximum supported communication speeds are as follows.
SPEED-BOX → MCU 25Mbps
MCU → SPEED-BOX 50Mbps

*2: The cable length is 5m. The maximum supported communication speeds are as follows.
SPEED-BOX→ MCU 12.5Mbps
MCU → SPEED-BOX 50Mbps

*3: A piece of Clump filter is not included

Notes:

- If separate USB cable or coaxial connector for the user system are needed, purchase commercially available products.
- If debug interface cable of a different length or having different specifications are needed, purchase this from a cable maker or purchase a commercial product. See Section “1.4: Debug interface cable” for details on the specifications of the debug interface cable.

1.4 Debug interface cable

1.4.1 Debug interface cable

The debug interface cable is a cable with SMA coaxial connectors that uses a 1.5D-2V (characteristic impedance 50Ω) wire core. Under the specifications of the MDI bus, cables having specifications other than those attached may be used as long as the cable is a coaxial cable with a characteristic impedance of 50Ω. Furthermore, because SMA coaxial connectors are standard connectors, there is a wide range of coupling connectors and adapters for converting to other cable specifications available commercially, allowing you to use the components that best suit the needs of the user
system.

The connector part number and cable specifications used in the debug interface cable with the standard specifications for this product (the included product is the 2m cable) are shown below.

Table 1-2. Connector part number and cable specifications

Item	Description	Manufacturer
Connector part number	HRM-200-2S-C(40)	HIROSE ELECTRIC CO., LTD.
Cable code number (UL)	1.5D-2V	Hitachi Metals, Ltd. and so on.

The maximum permissible communication speed of the MDI bus in this product for communication from the SPEED-BOX to the MCU varies depending on the cable length. The relationship between the cable length and the maximum permissible communication speed is shown below. The maximum permissible communication speed from the MCU to the SPEED-BOX is 50Mbps regardless of the cable length.

Table 1-3. Cable length and maximum permissible communication speed

Cable length	Maximum permissible communication speed (When using NRZ encoding)
2m or less	25Mbps
5m or less	12.5Mbps
10m or less	6.25Mbps

The relationship between the cable length and the maximum permissible communication speed anticipates a small margin of error, and it is not a problem if the actual total cable length is longer than the rated values by approximately 10cm.

The actual communication speed is configured by entering the parameters on the settings screen of the debugging software. The communication speeds that can be configured are limited by the MCU clock frequency. See the hardware manual of the MCU for details on the parameters.

1.4.2 Coupling connectors

Cables that use a HRM-200-2S-C can be connected to an extension cable by using a cable coupler. The relationship between the maximum permissible communication speed and the total cable length when 2 or more cables are connected together is given by Table 1-3. Table 1-4 shows the part number and manufacturer name of a coupler that has been verified by Cypress. Figure 1-2 shows the method for connecting a coupler.

Table 1-4. Cable coupler

Item	Description	Manufacturer
Cable coupler	HRM-501(09)	HIROSE ELECTRIC CO., LTD.

Figure 1-2. Cable coupler

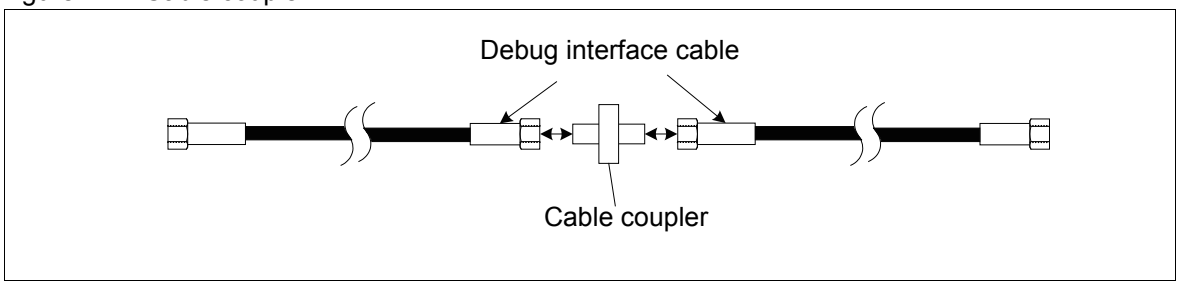

1.4.3 Small form connectors

When using a connector on the user system with an even smaller form than the SMA coaxial connector provided with the product, it is recommended to use the following connector and matching cables. The operation of this connector has been verified by Cypress. Take care because the relationship between the cable length and maximum permissible communication speed applies regardless of the cable specifications.

Table 1-5. Small form connectors and corresponding cables

Item	Description	Manufacturer	Remarks
Connector	H.FL-R-SMT(01)	HIROSE ELECTRIC CO., LTD.	
Coversion adapter	HRMP-H.FLJ(40)	HIROSE ELECTRIC CO., LTD.	
Cable	H.FL-2LP-FHSB-A-(3000)	HIROSE ELECTRIC CO., LTD.	Cable length: 3m
Cable	H.FL-2LP-FHSB-A-(1500)	HIROSE ELECTRIC CO., LTD.	Cable length: 1.5m
Cable	H.FL-2LP-FHSB-A-(100)	HIROSE ELECTRIC CO., LTD.	Cable length: 10cm

Figure 1-3 shows an example of the connection configuration when using the connector described above.

Figure 1-3. Using a small-form connector

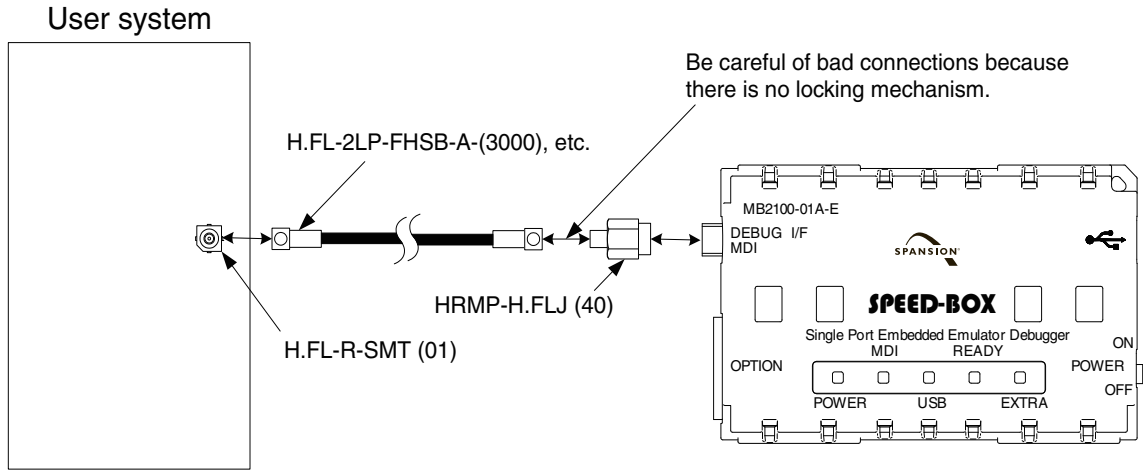

1. Mount the H.FL-R-SMT(01) on the user system.
2. Connect the HRMP-H.FLJ(40) to the SPEED-BOX.
3. Connect a H.FL-2LP-FHSB-A-(3000) or equivalent between the H.FL-R-SMT(01) on the user system and the HRMP-H.FLJ(40) that is connected to the SPEED-BOX.

In addition to the method described above, it is also possible to use a coupler and conversion adapter to join the mini-connector cable to the standard included cable.

1.5 Specifications

1.5.1 General specifications

Table 1-6 shows the general specifications for the SPEED-BOX.

Table 1-6. SPEED-BOX general specifications

Item	Specification
Name	SPEED-BOX
Part number	MB2100-01A-E
Power supply	5V / 500mA (USB bus powered)
MDI bus communication scheme	Single wire UART (NRZ or phase-modulated encoding). The encoding scheme used is determined by the MCU.
MDI bus maximum communication speed (from MCU to SPEED-BOX)	50Mbps Does not depend on cable length.
MDI bus maximum communication speed (from SPEED-BOX to MCU)	Cable length 2m or less: 25Mbps Cable length 5m or less: 12.5Mbps Cable length 10m or less: 6.25Mbps
Host computer communication scheme	USB 2.0 compliant
USB communication speed (theoretical value)	480Mbps (Hi-Speed),12Mbps (Full-Speed)
Power supply insulation withstand voltage*	AC250V / DC250V (may be applied constantly)
Operating temperature	+5°C to +40°C
Operating humidity	20% to 80% (no condensation)
Storage temperature	0°C to +70°C
Storage humidity	20% to 80% (no condensation)
External dimensions	84.8 (D) × 53.6 (W) × 21.3 (H) mm (not including connectors, switches, or other protruding parts.)
Weight	70g

*: This device isolates the power supply system of the host computer from the user system. See the Section "Power supply isolation specifications" below for details on the power supply isolation.

1.5.2 USB circuit specifications

The USB circuit specifications are shown in Table 1-7.

Table 1-7. USB circuit specifications

Item	Description
Standards compliance	USB 2.0 (certification acquired)
Communication scheme	Hi Speed / Full speed Bulk Transfer
USB communication speed (theoretical value)	480Mbps (Hi-Speed) 12Mbps (Full-Speed)
Connector type	Mini B (5pin)
Power supply	Bus Powered

Note: For this product, a bus powered hub is not available.

1.5.3 Power supply isolation specifications

The SPEED-BOX is equipped with an isolator that isolates the power supply systems of the host computer and user system. The SPEED-BOX can therefore be directly connected to user systems where there is an electromotive force between the signal ground (SG) and frame ground (FG; also called earth).

In general, the SG and FG of a PC are shorted together. (The PC chassis is the FG.) Furthermore, the PC FG is typically connected to the earth of the environment in which the device is installed via the earth line of a 3-wire AC cable. In this case, if there is an electromotive force between the SG and FG of the user system and the FG of the user system is connected to this same earth, then if the SG line of the host computer was connected to the SG line of the user system, a large current would flow through the SG line and damage the equipment. This product is built with the power supply system of the host computer side (USB side) separated from the MDI bus side using isolation technology such that the SG of the host computer is isolated from the SG of the user system within the SPEED-BOX.

The withstand voltage of the insulation (the tolerable potential difference between the host computer SG and the user system SG) is AC250V / DC250V for constantly applied voltages.

Figure 1-4 shows the relationship between the SG/FG and the isolation.

Figure 1-4. Relationship between SG/FG and isolation

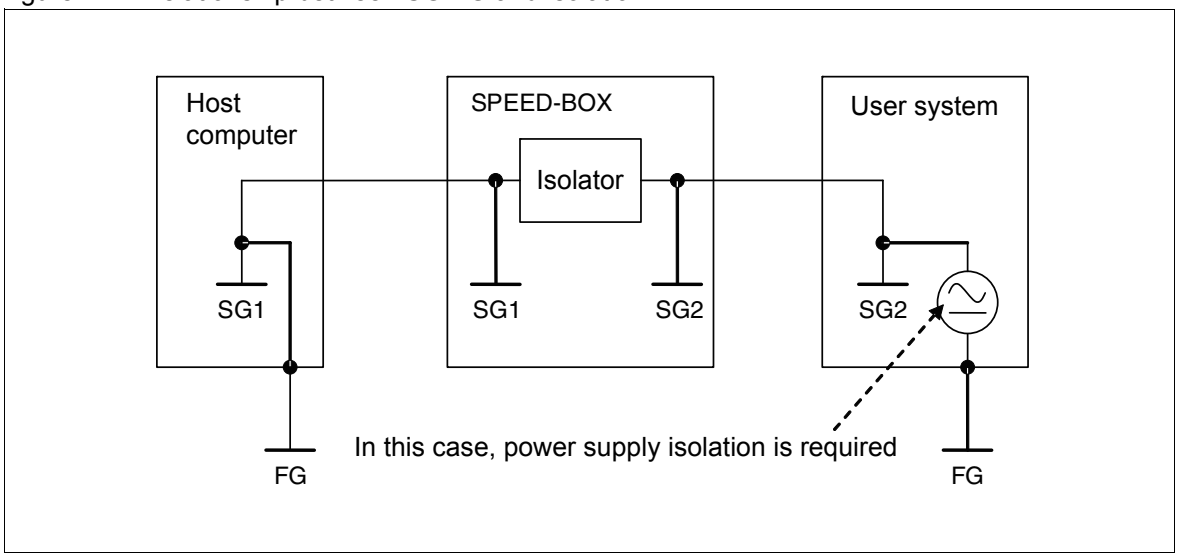

2. Connecting the SPEED-BOX

2.1 System configuration

The SPEED-BOX is connected to a host computer and is controlled by the host computer. The host computer controls the SPEED-BOX using Emulator debugging software. See the “SOFTUNE Workbench Operation Manual” for details on operating the software. Figure 2-1 shows the system configuration of the SPEED-BOX.

Figure 2-1. System configuration

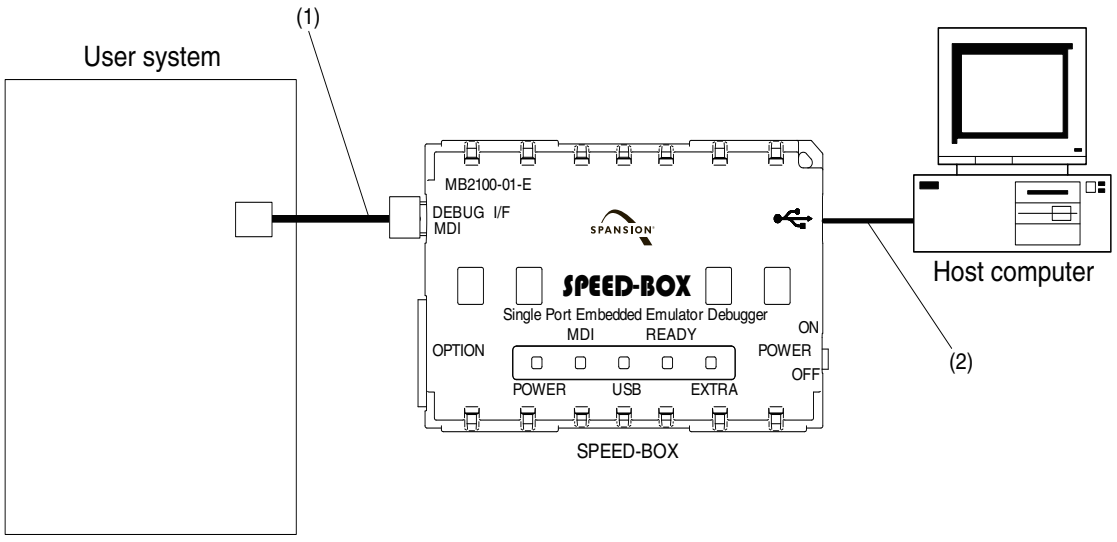

(1)Debug interface cable (2m)
The optional debug interface cable (5m) or other cables can also be used.
(2)Mini USB cable
Commercially available mini USB cables can also be used.
When using a commercial product, use a cable that has been certified for USB 2.0.

2.2 Connecting the SPEED-BOX to the user system

The SPEED-BOX connects to the user system using a debug interface cable. Mount a connector on the user system that matches the cable to be used. Figure 2-2 shows the connection method.

Figure 2-2. Debug interface cable connection

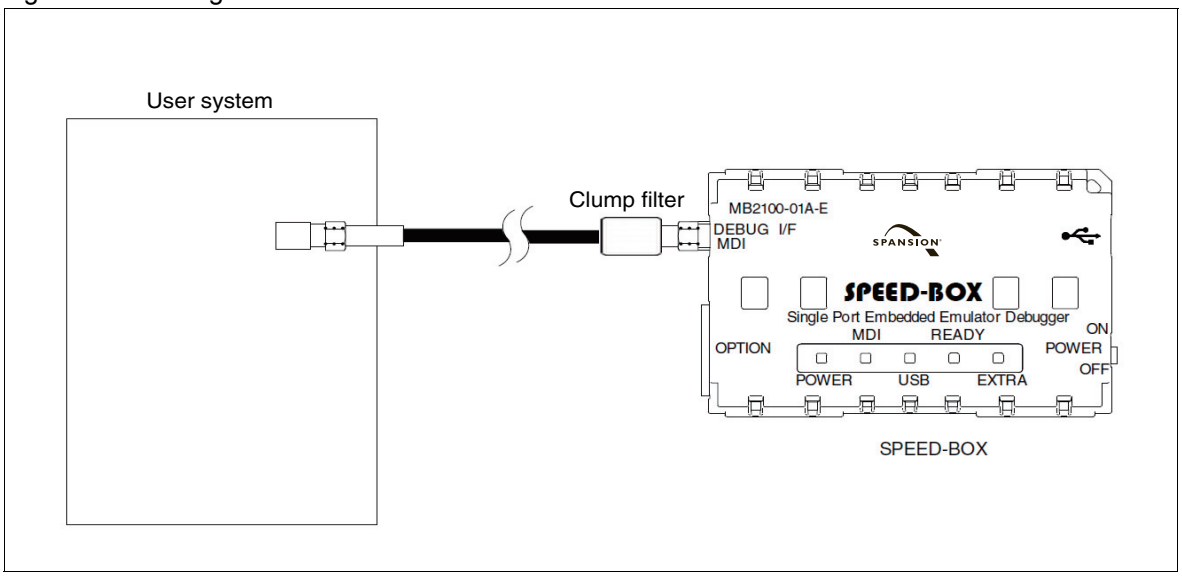

- Hot plugging

This product supports hot plugging. Hot plugging refers to connecting and disconnecting the debug interface cable while the power supply of one or both of the user system or SPEED-BOX is on. However, if a procedure is specified for connecting the debugger using the debugging software, follow this procedure.

When the SPEED-BOX power is on and the MDI bus is active, a bias voltage of 2.5V is applied to the MDI pin ia an in-series resistance of approximately 100Ω. If the MCU MDI pin on the user system has a pull-up resistance, then current may flow into the pull-up power source when the user system power supply is disconnected, causing a voltage of 2.5V or less in the pull-up power source circuit. If it is possible for this voltage to cause the user system to malfunction, then always activate the MDI bus by following the debugging software directions. The specifications of the MDI bus are that it is only active while the debugger is connected.

Note: If there is an electromotive force between the SG and FG on the user system, hot plug operations are forbidden because of the risk of electrical shock.

2.3 Connecting the SPEED-BOX to the host computer

The SPEED-BOX is connected to the host computer using the mini USB cable provided with this product. It is possible to use a mini USB cable other than the provided cable as long the cable is certified for USB 2.0.

Figure 2-3 shows the connection method.

Figure 2-3. Connection between the SPEED-BOX and host computer

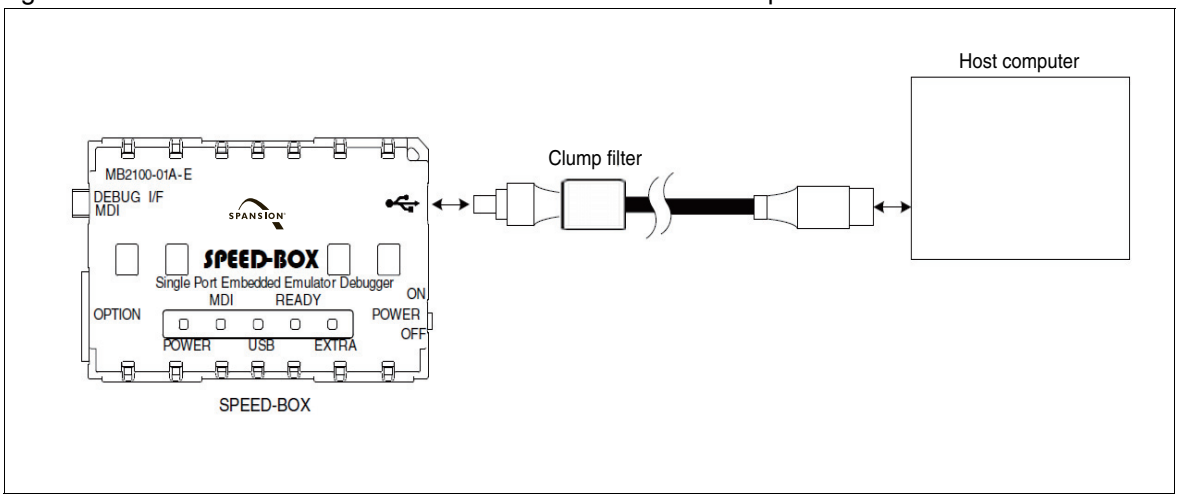

- SPEED-BOX power supply switch

As a general rule, it is recommended that the SPEED-BOX power switch be turned on after connecting the USB cable. However, the equipment will not be damaged if the USB cable is disconnected or connected while the power switch is on.

3. Operating Procedures

3.1 Power on and power off procedures

This product supports hot plugging of both the debug interface cable and the USB connector. Although there is no strict power on or power off procedures, the following procedures are recommended.

- Power-on procedure (standard operation)

1. Connect the SPEED-BOX with the power switch off to the host computer using the mini USB cable.
2. Connect the user system with the power disconnected to the SPEED-BOX using the debug interface cable.
3. Turn on the SPEED-BOX power switch.
4. Start SOFTUNE Workbench and select [Debug] -> [Start Debugging] to start the process of connecting the debugger.
5. When one of the dialogs shown in Figure 3-1 on the SOFTUNE Workbench is displayed, turn on the user system. The dialog may vary depending on versions of the SOFTUNE Workbench. If a different dialog appears, refer to each documentation for SOFTUNE Workbench.

Figure 3-1. Dialog box display

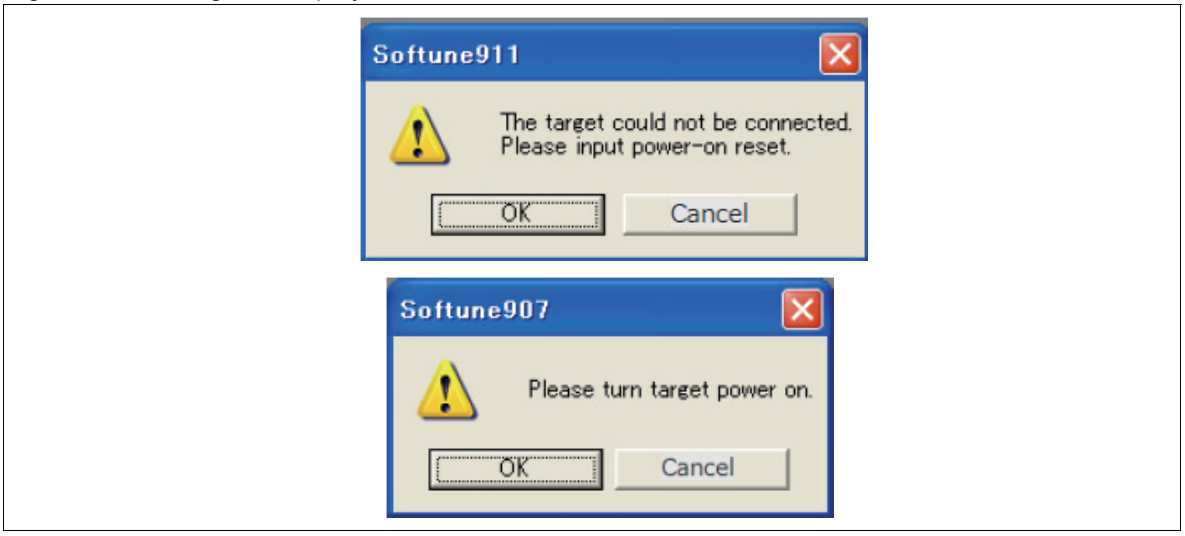

6. Press the [OK] button on the dialog shown above after the power-on reset of the user system has been released.

- Power-off procedure

1. Select [Debug] -> [End Debugging] in SOFTUNE Workbench to end the debugger connection (the MDI bus is deactivated).
2. Disconnect the power supply of the target board.
3. Disconnect the power supply of the SPEED-BOX.

4. User System Board Design Guidelines

The MDI bus of this product employs specifications that guarantee signal integrity by impedance matching in order to achieve high-speed signal transmission over distances of 10m. There are therefore rules on the method of wiring in the vicinity of the MCU MDI pin on the user system in order to maintain signal quality. Design the user system board in accordance with the following rules.

4.1 Circuit board design rules

Figure 4-1 shows a schematic of the circuit near the MCU MDI pin. Specifications of the R0 value depend on those of MCU. Also, there may be some MCU sharing MDI pin with other features. In this case, to use this pin for MDI, it is necessary to prevent the circuit elements which is different from one shown in this circuit from being added to the MDI bus. For details, refer to the Hardware Manual for MCU you are using.

Figure 4-1. Schematic diagram of the circuit near the MCU MDI pin

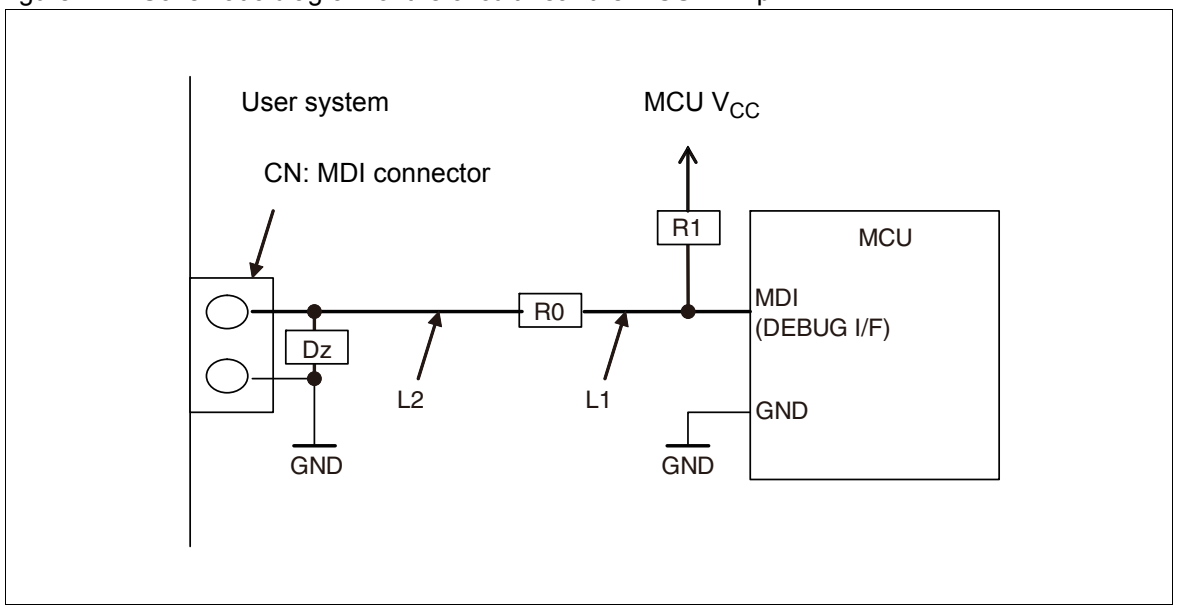

Table 4-1 shows all of the rules.

If a scheme other than as recommended is used for the connection specifications, the signal quality will degrade slightly. Care is needed because this also has an effect on noise immunity.

Table 4-1. User system circuit board design rules

Item	Applies to	Description	Importance
1	CN selection 1	Cypress recommended coaxial connector	Recommended
2	CN selection 2	■ Connector for signal applications as suitable for a 50MHz logic signal interface, current capacity of 25mA or more ■ When using a multi-pin composite connector, arrange the MDI (or DEBUG I/F) pin and GND pin next to each other, and locate the MDI (or DEBUG I/F) pin as far away from other high-speed or high current signal pins as possible.	Mandatory
3	R0 selection	■ The resistance value specified in the MCU ratings (the output impedance becomes 50Ω when the MCU is outputting L). ■ Pw (permissible power dissipation) = 0.1W or more. Typically, R0 = 43Ω ± 5%	Mandatory
4	R1 selection	10kΩ ± 5%, Pw = 0.1W or more	Mandatory
5	Dz selection and placement	■ ESD protection Zener diode for high-speed signal lines with capacitance of 5pF or less and Zener voltage of 0.1V + MDI bus maximum voltage or more. ■ Locate next to the CN.	Recommended
6	R0, Dz wiring	Keep as short as possible.	Mandatory
7	GND wiring	■ Keep the impedance between the MCU and CN as small as possible. ■ Connect directly to the GND layer on multi-layer PCBs that have a GND layer.	Mandatory
8	L1 wiring length	Make as short as possible, and keep less than 5cm.	Mandatory
9	L2 wiring length	■ When item 1 is applicable, less than 15cm ■ When item 1 is not applicable, the total combined distance from R0 to the coaxial cable impedance change point is 15cm or less	Mandatory
10	L2 characteristic impedance	50Ω	Recommended
11	L1 and L2 via holes	Two locations or less in each wiring path (excluding ends)	Mandatory
12	L1 and L2 noise protection 1	Surround both ends of the signal line with GND pattern.	Recommended
13	L1 and L2 noise protection 2	Avoid running parallel with other signal lines as much as possible. In areas that run parallel, create as large a gap as possible to fully reduce cross-talk from the parallel signal.	Mandatory

4.2 Handling the coaxial cable when using a general purpose connector

When using a general purpose connector instead of a coaxial cable-specific part for the user system connector, create the coaxial cable and connector assembly by adhering to the following points as shown in Figure 4-2.

- All of La and Lb are included in the total wiring length limit on L2 from the previous section.
- For the electrical characteristics, it is recommended that the coaxial cable is directly connected to the target board using a general-purpose connector without using the second connector (including parallel signal wires).

Figure 4-2. Handling the coaxial cable

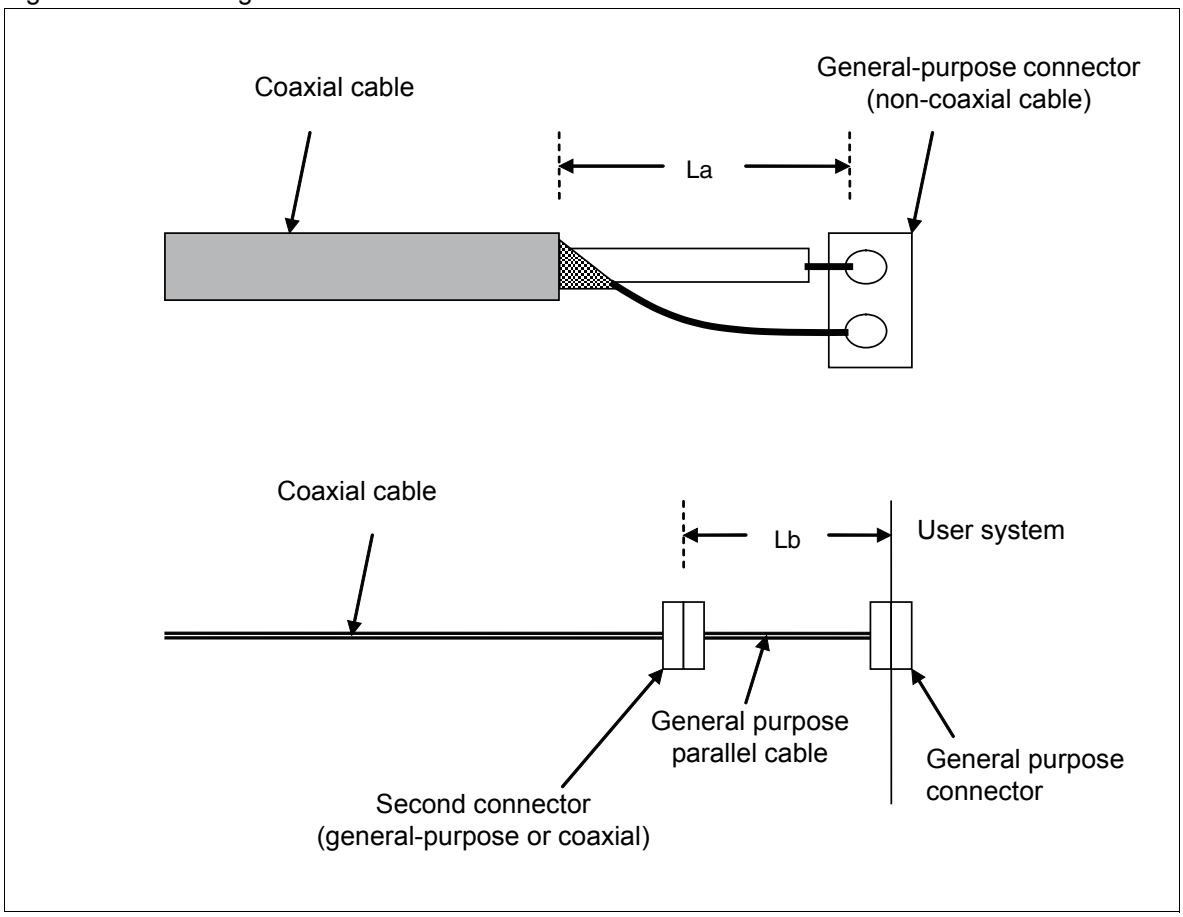

5. Cautions

The cautions on this product are summarized below.

- In order to prevent damage by static electricity, take care not to touch the pins of the option connector on this product with your fingers or other objects.
- When using the power supply isolation function, be careful of the insulation withstand voltage.
- When connecting to user system that requires power supply isolation, hot plugging of the MDI bus is forbidden because of the risk of electrical shock.
- When hot-plugging the MDI bus, the connector needs to physically support hot plugging. That is, the connector needs to have a physical shape such that SG makes contact first when connecting, and loses contact last when disconnecting. When using a connector other than the Cypress recommended part for the user system connector, check that the connector to be used supports hot plugging before performing hot plugging. Although all of the Cypress recommended parts support hot plugging, check the condition of the connector, such as whether there are assembly problems, before carrying out hot plugging.

6. Major Changes

Page	Section	Change Results
Revision 1.0		
-	-	Initial release
Revision 2.0		
i	PREFACE	Added discription of registered trademark
Cover, i, 1 to 11, 16, 17	All	Added "SPEED-BOX" and the logo Revised "SPEED-BOX" from "emulator"
1	-	Changed part number of USB cable
2, 4, 5 to 13, 15, 16	All	Added "MDI"
11	3.Operating Procedures	Revised section five description of "Power-on procedure" and figure 8
13	4.User System Board Design Guidelines	Revised description of "Circuit board design rules" and figure 9
16	6.Previous product name and design	Added the desctiption
Revision 3.0		
-	6.Previous product name and design	Deleted the desctiption
7, 9	All	Added the Clump filter description
1, 3, 13, 25	All	Updated part number : 01A
-	All	Company name and layout design change Page number update
Revision 4.0		
-	-	Revised the campany name and logo
8	Figure 1-(4)	Changed the desctiption
8	Figure 1-(7)	Changed the description
12	Table 6	Deleted a part of the description of Item "MDI bus maximum communication speed"

Note: Please see “Revision History” about later revised information.

Revision History

Document Revision

Document Title: MB2100-01A-E Single Port Embedded Emulator Debugger SPEED-BOX Operation Guide Document Number: 002-05542				
Revision	**ECN#**	**Issue Date**	**Origin of Change**	**Description of Change**
**	–	08/10/2015	GSHI	Initial release
*A	5272741	08/08/2016	GSHI	Migrated Spansion Guide from MB2100-01A-E_SS01-00026-4E to Cypress format.