



In-Circuit Emulator Guide

Document # 001-44612 Rev. *B

Cypress Semiconductor
198 Champion Court
San Jose, CA 95134-1709
Phone (USA): 800.858.1810
Phone (Intnl): 408.943.2600
http://www.cypress.com

© Cypress Semiconductor Corporation, 2005-2012. The information contained herein is subject to change without notice. Cypress Semiconductor Corporation assumes no responsibility for the use of any circuitry other than circuitry embodied in a Cypress product. Nor does it convey or imply any license under patent or other rights. Cypress products are not warranted nor intended to be used for medical, life support, life saving, critical control or safety applications, unless pursuant to an express written agreement with Cypress. Furthermore, Cypress does not authorize its products for use as critical components in life-support systems where a malfunction or failure may reasonably be expected to result in significant injury to the user. The inclusion of Cypress products in life-support systems application implies that the manufacturer assumes all risk of such use and in doing so indemnifies Cypress against all charges.

PSoC Designer™, Programmable System-on-Chip™, are trademarks and PSoC® is a registered trademark of Cypress Semiconductor Corp. All other trademarks or registered trademarks referenced herein are property of the respective corporations.

Any Source Code (software and/or firmware) is owned by Cypress Semiconductor Corporation (Cypress) and is protected by and subject to worldwide patent protection (United States and foreign), United States copyright laws and international treaty provisions. Cypress hereby grants to licensee a personal, non-exclusive, non-transferable license to copy, use, modify, create derivative works of, and compile the Cypress Source Code and derivative works for the sole purpose of creating custom software and or firmware in support of licensee product to be used only in conjunction with a Cypress integrated circuit as specified in the applicable agreement. Any reproduction, modification, translation, compilation, or representation of this Source Code except as specified above is prohibited without the express written permission of Cypress.

Disclaimer: CYPRESS MAKES NO WARRANTY OF ANY KIND, EXPRESS OR IMPLIED, WITH REGARD TO THIS MATERIAL, INCLUDING, BUT NOT LIMITED TO, THE IMPLIED WARRANTIES OF MERCHANTABILITY AND FITNESS FOR A PARTICULAR PURPOSE. Cypress reserves the right to make changes without further notice to the materials described herein. Cypress does not assume any liability arising out of the application or use of any product or circuit described herein. Cypress does not authorize its products for use as critical components in life-support systems where a malfunction or failure may reasonably be expected to result in significant injury to the user. The inclusion of Cypress' product in a life-support systems application implies that the manufacturer assumes all risk of such use and in doing so indemnifies Cypress against all charges.

Use may be limited by and subject to the applicable Cypress software license agreement.

Contents

1. Introduction **5**

1.1 Support 5
1.2 Conventions 5
1.3 Acronyms 6

2. Connecting to the ICE **7**

2.1 Software Requirements 7
2.2 Connecting the ICE Cube 7
2.3 Configuring the Software 8

3. Troubleshooting **9**

3.1 Windows Errors 9
3.1.1 Cannot Install This Hardware 9
3.2 ICE Error Messages 9
3.2.1 Could Not Configure ICE 9
3.2.2 This Project is Incompatible with the Pod/Chip 10
3.2.3 Invalid Memory Reference 10
3.2.4 The Selected ICE Port Cannot be Found 10
3.2.5 Could Not Configure ICE 10
3.2.6 An ICE Port is Enumerating Please Try Again 10
3.2.7 USB Hub Power Exceeded 10
3.3 Specific ICE Usage Cases 11

4. Accessing the Computer BIOS **13**

4.1 Changing Parallel Port Mode 13

5. Alternate Parallel Port Cards **15**

5.1 Selecting an Alternate Parallel Port 15
A.1 Critical Components 17
A.2 Device Family Information 19

Section A: Revision History **21**

1. Introduction

Use the PSoC Designer™ In-Circuit Emulator (ICE) guide to install and troubleshoot connection problems with the ICE Cube. The ICE Cube provides significant debugging functionality that requires full two-way communication between the ICE and your computer to operate. There are several steps in the connection process, including setting up the hardware and making the communications connection in the software. The ICE Cube is supported by PSoC Designer version 4.2 and later.

1.1 Support

Free technical support for PSoC Designer is available online at www.cypress.com. Resources include training seminars, discussion forums, application notes, PSoC consultants, TightLink technical support email and knowledge base, and application support technicians.

You can also contact technical support by phone at 1-800-541-4736.

Before using Cypress support services, know the version of PSoC Designer installed on your system. To determine the version, build, or service pack, click Help > About PSoC Designer.

Cypress provides scheduled upgrades and version enhancements for PSoC® software free of charge. You can order upgrades from your distributor on a CD-ROM or download them directly from www.cypress.com under Software Downloads > Software and Drivers. Critical updates to system documentation are also available on the Cypress website.

1.2 Conventions

The following table lists the document conventions used throughout this user guide.

Table 1-1. Documentation Conventions

Convention	Usage
`Courier New`	Displays file locations, user entered text, and source code: `C:\ ...cd\icc\`
Italics	Displays file names and reference documentation: Read about the *sourcefile.hex* file in the *PSoC Designer User Guide*.
[**Bracketed, Bold**]	Displays keyboard commands in procedures: [**Enter**] or [**Ctrl**] [**C**]
File > Open	Represents menu paths: File > Open > New Project
Bold	Displays commands, menu paths, and icon names in procedures: Click the **File** icon and then click **Open**.
Text in gray boxes	Presents cautions or unique functionality of the product.

1.3 Acronyms

The following acronyms are used throughout this user guide.

Table 1-2. Acronyms

Acronym	Description
BIOS	basic input output system.
CAT5	category 5 cable
ECP	extended capabilities port
EPP	enhanced parallel port
HAL	hardware abstraction layer
ICE	in-circuit emulator
IDE	integrated development environment
LPT	line printer terminal (parallel port)
OHCI	open host connection interface
UHCI	universal host connection interface
USB	universal serial bus

2. Connecting to the ICE

Physically connecting the ICE Cube to a Windows® compatible computer requires a few procedures and software configuration.

2.1 Software Requirements

You need PSoC Designer 4.2 or later, or PSoC Programmer 1.22 or later, to use the ICE Cube development hardware. The most current version of either program is available for download on the Cypress website at www.cypress.com or on a CD-ROM from your distributor.

Install the software prior to physically connecting the hardware to your computer. Refer to the installed software to determine system requirements.

2.2 Connecting the ICE Cube

PSoC Designer v. 4.2 and later supports the ICE Cube. This in-circuit emulator replaced the ICE-4000 and the USB Adapter for seamless USB connection, debugging, and programming.

Figure 2-1. The ICE Cube



The ICE Cube connects to any computer using a standard USB 2.0 cable, included in Cypress development kits. Complete the following steps to connect the ICE Cube to your computer:

1. Install PSoC Designer v. 4.2 or later, and PSoC Programmer v. 1.22 or later on your computer.
2. Plug the USB cable into your computer and then attach the other end to the ICE Cube.

The ICE Cube is a plug and play device and should be recognized automatically by any computer with PSoC Designer or PSoC Programmer installed. If USB connection problems occur, refer to Microsoft® Windows Help for troubleshooting Windows connectivity issues.

2.3 Configuring the Software

After the physical connection is made, you can configure the internal connection from the computer to the ICE. The ICE enables communication and debugging between PSoC Designer and the pod. To connect to the ICE from inside PSoC Designer, perform the following steps:

1. Confirm that the Flex-Pod is attached to the ICE Cube.
2. Confirm that the USB connection is secure from the ICE to the PC.
3. Confirm that the ICE is powered from the power adapter.
4. Open a project. (Example projects are available.)
5. Click **Project > Settings > Debugger**.
6. Select the correct port from the drop-down window.
7. Click **Connect**.

Upon successful connection, the Output window will report that the ICE is connected and the PSoC Designer status bar will show the connection status as well.

3. Troubleshooting

Troubleshooting the ICE Cube is provided for Windows and ICE error messages. For additional support, refer to "Support" on page 5.

3.1 Windows Errors

A common Microsoft Windows error message that may occur when installing an ICE Cube is described in the following section. For more information on solving specific Windows problems, consult Microsoft.

3.1.1 Cannot Install This Hardware

In Windows Me/2000/XP, if you plug in the USB Adapter before you install PSoC Designer you will be prompted by the Found New Hardware Wizard to install an unknown USB device.

Exit the wizard, unplug the USB Adapter and then install PSoC Designer. After installing PSoC Designer, you may need to manually install the PSoC adapter drivers. You can do this via the Device Manager.

3.2 ICE Error Messages

Use the table listed below each error message to determine how to solve the error.

3.2.1 Could Not Configure ICE

Problem	Solution
The system needs to reboot.	System reboot may be required after installation.
There are conflicts with other software or hardware.	Verify that no printers or other devices are assigned to the parallel port used by the ICE. If a conflict is found, reassign the printer or device to a different port or to print to a file.
A hardware failure has occurred.	Although all hardware is tested by Cypress before being shipped, it is possible to have a faulty parallel cable, CAT5 cable, or pod. Try swapping parallel cables or pods if possible. Swapping the CAT5 cable is not advised. The ICE requires CAT5 cables 1 foot or less in length with all 8 wires connected. Some patch cables may contain only 4 wires.

3.2.2 This Project is Incompatible with the Pod/Chip

Problem	Solution
An obsolete pod is connected to the ICE.	Upgrade to a current revision pod.
The wrong project is selected for the pod.	Verify that the project matches the pod type.

3.2.3 Invalid Memory Reference

Problem	Solution
The internal states of the ICE-base station and pod are corrupted.	Read Application Note AN2021 "What is an Invalid Memory Reference" on www.cypress.com for a complete analysis of these problems and their solutions.

3.2.4 The Selected ICE Port Cannot be Found

Problem	Solution
The USB cable is detached from either the USB Adapter or the computer.	Plug the cable in and wait a few seconds, then press the Connect ICE icon in the Debugger subsystem.

3.2.5 Could Not Configure ICE

Problem	Solution
The port settings are incorrect.	Configure the port settings in software to the correct port.
The power is disconnected.	Check the power cord connections.
The USB cable is disconnected.	Check the USB cable connections.

3.2.6 An ICE Port is Enumerating Please Try Again

Problem	Solution
The port is busy.	Wait a few seconds and try the connection again.

3.2.7 USB Hub Power Exceeded

Problem	Solution
There is not enough power available for the device.	Attach the device to a direct power supply. Attach the device closer to the primary USB port.

3.3 Specific ICE Usage Cases

Follow the steps when you debug firmware using ICE Cube.

1. When the CPU is stopped at the breakpoint, the Internal Main and Low Speed Oscillators continue to run. The analog and digital blocks, which do not need CPU intervention will continue running. This means that components such as ADCs, Counters, and UARTs will also continue to run.
2. In the debug mode the supervisory system call instructions (SSC) are executed in a special way. PSoC executes different SSC commands over different intervals –from the tens of microseconds (for reading) to the tens of milliseconds (for writing). In the debug mode these commands are executed much longer - all commands are executed for up to 1.5 seconds.

   Whenever any SSC operation is called, the USB SIE is disabled. Therefore the USB Bootloader user modules have the "ICE_Debug_Flash_Disable" property. In the debug mode this property must be set to "Flash Write DISABLE". When the flash write is disabled, then any application can be completely tested, but no code is actually written to flash.

4. Accessing the Computer BIOS

Methods for accessing computer BIOS setup utilities vary depending on the BIOS and computer manufacturer. Table 4-1 lists most common BIOS providers and the typical hotkey commands used to access their BIOS utilities. Contact the computer manufacturer for information on accessing the BIOS of a specific computer.

Table 4-1. BIOS Hotkey Commands

BIOS Manufacturer	Key Command(s)
ALR Advanced Logic Research, Inc. ® PC / PCI	[F2]
ALR PC non / PCI	[Ctrl+Alt+Esc]
AMD (Advanced Micro Devices) BIOS	[F1]
AMI (American Megatrends, Inc.) BIOS	[Delete]
Award BIOS	[Delete]
DTK (Datatech Enterprises Co.) BIOS	[Esc]
Phoenix BIOS	[Ctrl+Alt+Esc]
Phoenix BIOS	[Ctrl+Alt+S]
Phoenix BIOS	[Ctrl+Alt+Insert]

4.1 Changing Parallel Port Mode

To change parallel port mode, complete the following steps:

1. Locate the parallel port mode setting in your computer BIOS or system configuration setup. The parallel port mode settings may be located in the Advanced Settings section, Peripherals, Communication, or Input/Output sections.
2. Parallel port modes set to Normal or Uni-directional will not work. Change the setting to a different mode.
3. Exit the BIOS making sure you save the changes.

Compaq computers with Compaq BIOS do not allow you to change the parallel port settings. You must disable the DMA channel, which causes the parallel port to change to EPP mode. To do this, turn off the DMA channel assigned to the port and use the same hardware configuration that the current port is assigned. This will change the mode from ECP to EPP. For example; Change 0378-037F, IRQ 7 DMA2 to 0378-037F, IRQ7. On some older Compaq computers it may not be possible to assign the parallel port settings without a DMA setting. If this is the case, contact Compaq for a possible BIOS upgrade.

Track all changes made to the BIOS. Incorrect BIOS settings will prevent a PC from working.

5. Alternate Parallel Port Cards

If you cannot get your existing parallel port to work with the Cypress PSoC ICE-4000, you should add a parallel port card that is known to be compatible with the ICE-4000. Cypress has tested the parallel port cards in Table 5-1 with systems that have not connected using their existing parallel port. One of these solutions is compatible with PCI bus-based PCs and the second uses the PCMCIA port available on many portable computers.

Table 5-1. Alternate Parallel Port Cards

PC Type	Port	Parallel Port Option
Desktop	PCI	SIIG, Inc.® Cyberparallel PCI Model IO1839, Part# JJ-P00112 www.siig.com
Notebook	PCMCIA	Quatech SPP-100 EPP Parallel PCMCIA Card. www.quatech.com/catalog/parallel_pcmcia.php

Follow the manufacturer instructions to install and configure these parallel ports. These cards include drivers that support Windows 98, 98SE, Me, NT, 2000, and XP.

5.1 Selecting an Alternate Parallel Port

If the new parallel port card is installed as LPT2, PSoC Designer must be configured to use LPT2. To select an alternate parallel port:

1. Click **Project > Settings**.
2. Inside the dialog box, select **Debugger**.
3. Click the drop-down menu box, select **LPT2**, and then click **OK**.
4. Verify the connection by clicking the **Connect** icon.

If the ICE-4000 still does not connect, make sure it is connected to the correct parallel port. Also, verify that the parallel port is installed correctly according to the manufacturer's instructions. The PC may need to be restarted after installing the new parallel port. If the PC is restarted, verify that the correct parallel port is still selected when re-entering PSoC Designer.

Appendix A Build an Emulator

Most of us agree that being able to emulate the circuit before going to volume production will greatly improve engineering efficiency and avoid budget overrun. However, due to mechanical limitations (packages with small footprint such as TSSOP or MLF/QFN) or electrical limitations (inductance generated from long cable), standard emulations are sometimes inadequate. Often the best solution is to add emulation capability with ICE connection onto your own board. AN2323 outlines how to include emulation circuitry on your board and get you emulating your design in no time.

A.1 Critical Components

To build your own on-board emulation circuitry, you need the following components:

Table 6-1. Build of Materials List for PSoC Emulator Circuit

Quantity	Description	Notes
1	RJ45 connector	AMP/Tyco Electronics 5557785-1 DigiKey Part Number A31457-ND
1	PSoC OCD part	
4	56-ohm resistor	1/16W 5%
4	1 kΩ resistor	1/16W 1%
1	330 pF capacitor	5.0 V Ceramic NPO
3	0.1 µF capacitor	5.0 V Ceramic Y5V

All series resistors are used as termination, for impedance matching on the signal lines. Bypass capacitors are included to filter out AC noise from the circuit.

Figure A-1 details the mechanical drawing information for the AMP/Tyco CAT5 connector that connects with the CY3215-DK ICE-Cube debugger. For more information on the CY3215-DK, visit www.cypress.com/go/CY3215-DK.

Figure A-2 details the schematic layout for the emulation circuit. Table 6-1 details information regarding the components needed to complete the PSoC Emulation Circuit.

For board layout, restrict your trace length to less than 4 inches and match length on OCDHC, OCDCC, OCDDO, and OCDDE (48 MHz, square wave).

AMP5557785-1 has two configurations. AN2323 uses CAT5 jack configuration, others might use traditional jack configuration.

Figure A-1. Mechanical Drawing for AMP/Tyco 5557785-1(CAT5)

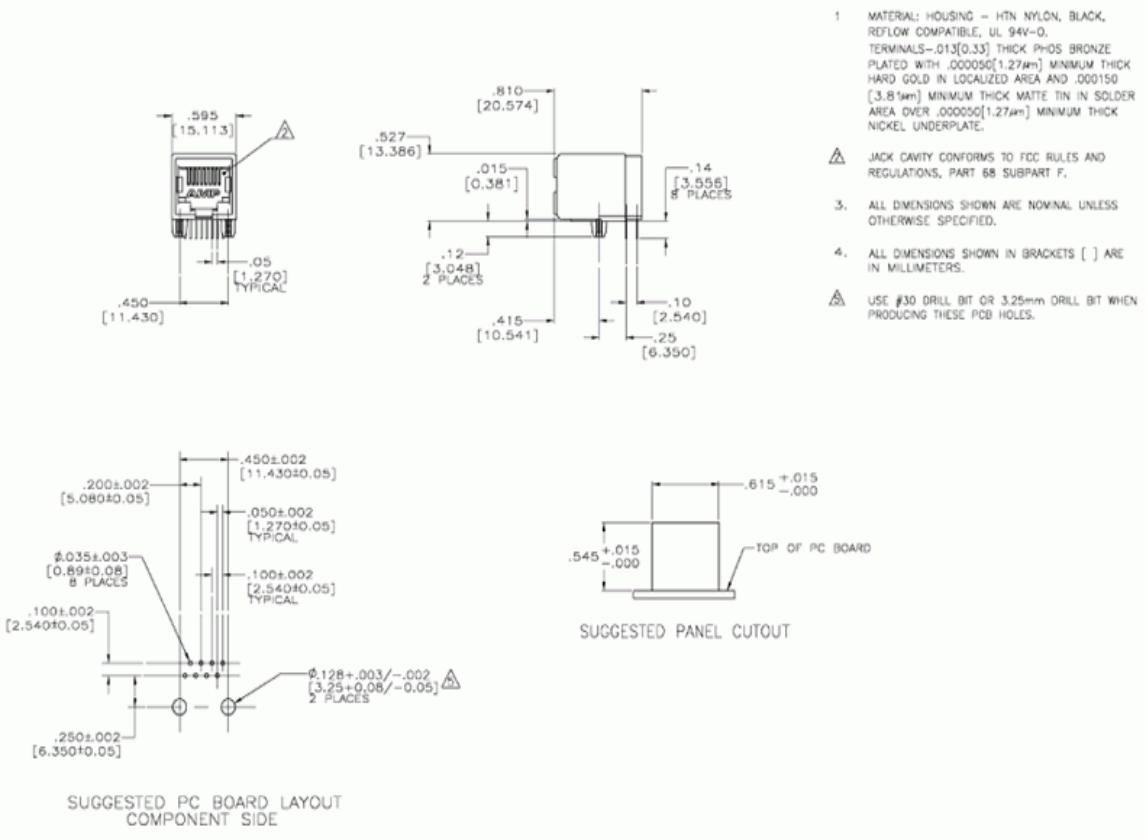

Figure A-2. Emulation Circuitry Schematic

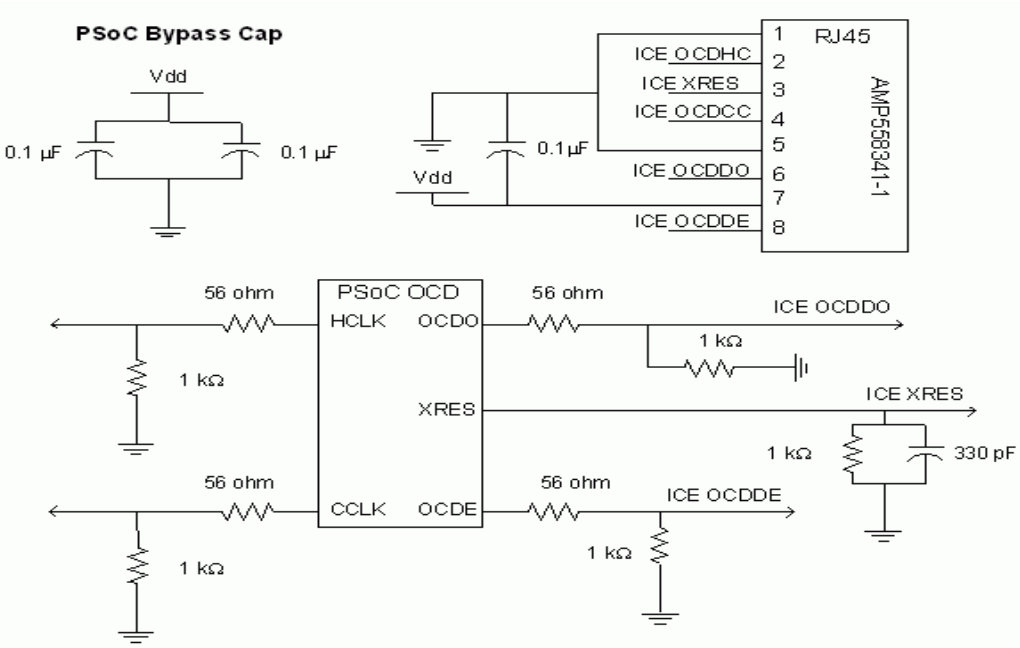

A.2 Device Family Information

For every PSoC device family, there is only one on-chip debugger (OCD) package. Note that the OCD package may or may not be available for production volumes.

Cypress does not recommend shipping product with OCD devices on board.

The following table lists the available PSoC 1 device families, the OCD part number, Package Information and a link to the Datasheet or Technical Reference Manual (TRM). The Datasheet or TRM provides detailed information on OCD pin out and package information. This information is critical for PCB layout and system development. Do refer to Datasheet and TRM for latest device information.

If the table lists 'N/A' then the device family does not offer OCD devices that can be ordered.

Table 6-2. Device OCD Part Summary

PSoC Device	OCD Part Number	OCD Package	Datasheet/TRM Web Link
CY8C20x34	CY8C20000	48 QFN	CY8C20x34
CY8C20xx6A	CY8C20066	48 QFN	CY8C20xx6A
CY8C21x23	CY8C21001	56 SSOP	CY8C21x23
CY8C21x34	CY8C21001	56 SSOP	CY8C21x34
CY8C22x45	CY8C22045	56 SSOP	CY8C22x45
CY8C21x45	CY8C22045	56 SSOP	CY8C21x45
CY8C23x33A	N/A	N/A	N/A
CY8C24x23A	CY8C24000A	56 SSOP	CY8C24x23A
CY8C24x33A	CY8C24033A	56 SSOP	CY8C24x33A
CY8C24x94	CY8C24094	100 TQFP	CY8C24x94
CY8C27x43	CY8C27002	56 SSOP	CY8C27x43
CY8C28xxx	CY8C28000	56 SSOP	CY8C28xxx
CY8C29xxx	CY8C29000	100 TQFP	CY8C29xxx
CY8CLED02	N/A	N/A	N/A
CY8CLED04	N/A	N/A	N/A
CY8CLED0x0x	CY8CLED0x0OCD1	56 QFN	CY8CLED0x0x
CY8CLED08		N/A	N/A
CY8CLED16	N/A	N/A	N/A
CY8CLED16P0x	CY8CLED16P01	56 QFN	CY8CLED16P0x

Revision History

Document Revision History

Document Title: PSoC Designer™ In-Circuit Emulator Guide Document #: 001-44612				
Revision	**ECN #**	**Issue Date**	**Origin of Change**	**Description of Change**
**	2503614	05/18/2008	WBZ	New document to be released with PSoC Designer 5
*A	3271510	06/03/2011	WBZ	Section 3.3 added - specific ICE usage cases..
*B	3728804	08/30/2012	WBZ	Updates and new screenshots. Updates for PSoC Designer 4.2, including name change. Updates for PSoC Designer 4.2, including name change. This guide encompasses the old PSoC ICE Connection and Troubleshooting Guide and the old PSoC ICE USB Adapter guide Added a chapter Appendix A - content from AN2323.