PSoC

Thermal Management Expansion Board Kit CY8CKIT-036

User's Guide



terasIC
www.terasic.com

CYPRESS
PERFORM

Copyright © 2003-2012 Terasic Technologies Inc. All Rights Reserved

CONTENTS

Chapter 1 *INTRODUCTION TO THE TME EBK* **3**

1.1 Features 4

1.2 About the KIT 5

1.3 PSoC Creator 6

1.4 Getting Help 6

Chapter 2 *TME EBK ARCHITECTURE* **7**

2.1 Layout and Components 7

2.2 Thermal Management Solution on the TME 8

Chapter 3 *TME EBK HARDWARE OVERVIEW* **10**

3.1 2x20 pin Interface Header 10

3.2 TME EBK Headers and Jumpers 11

3.3 PWM Output Digital Temperature Sensors 12

3.4 I2C Digital Temperature Sensor 13

3.5 1-Wire Digital Temperature Sensor 14

3.6 Diode Analog Temperature Sensors 15

3.7 4-Wire Fan Connectors 15

3.8 Development Kit (DVK) Compatibility 16

Chapter 4 *EXAMPLE PROJECTS FOR THE TME* **17**

4.1 Introduction 17

4.2 Software Installation 17

4.3 Hardware Setup 18

4.4 Example Projects 21

Chapter 5 *TME SCHEMATICS* **39**

5.1 Power Supply 39

5.2 4-Wire Fan Sockets 39

5.3 I2C/SMBus/PMBus Port 40

5.4 2x20 Pin DVK Connector and Test Points 40

5.5 1-Wire Temperature Sensor 40

5.6 Temperature Diodes 41

5.7 I2C Temperature Sensor 41

5.8 PWM Temperature Sensors 41
5.9 Layout 42
5.10 Top layer 42
5.11 Bottom layer 43
5.12 Top Silkscreen 43
5.13 Bill of Materials 44
Chapter 6 *APPENDIX* **46**
6.1 Revision History 46
6.2 Copyright Statement 46

Chapter 1

Introduction to the TME EBK

In general terms, thermal management is a combination of temperature sensing, fan control and the algorithms or transfer functions that map temperature to fan speed. Thermal management is a critical, system-level function that needs to ensure that all components in the system operate within safe temperature limits, while at the same time minimizing power consumption and acoustic noise.

Typical solutions for thermal management include multiple devices such as CPLDs, mixed-signal ASICs and/or limited-functionality and inflexible discrete devices. Thermal management solutions need to be flexible enough to interface with many kinds of both digital and analog temperature sensors. To maximize efficiency, they must also be able to drive a multitude of fans independently. Finally, thermal management solutions must have enough intelligence built in to reliably control the cooling systems autonomously, independent of a master control processor in the event that communications are lost or the master control processors fail or go offline.

The PSoC® 3 architecture enables a flexible and unique method of thermal management in a single chip, combining analog sensing capabilities for any kind of analog temperature sensor such as remote diodes, thermistors, resistance temperature detectors (RTDs), etc. PSoC 3's versatile digital resource pool enables the integration of multiple I2C bus interfaces, capture timers and even full-custom logic to support interfaces to a wide variety of digital temperature sensors such as I2C based, pulse-width-modulated (PWM) based and other proprietary serial interface digital temperature sensors. PSoC 3's unique CPLD-like hardware blocks are also used to implement a full hardware closed loop fan control system for high reliability systems that require zero intervention from firmware running on the built-in MCU or running on an external master control processor. This frees up MCU processing power to run and manage algorithms or transfer functions of very high complexity to optimize fan speeds to achieve system cooling requirements.

The PSoC Thermal Management Expansion Board Kit (TME EBK) is a part of the PSoC development kit ecosystem and is designed to work with the CY8CKIT-001 PSoC Development Kit (DVK) and CY8CKIT-030 PSoC 3 Development Kit (DVK). It enables you to evaluate a system's thermal management functions and capabilities of PSoC 3 devices. You can evaluate the example projects described in this guide or design and customize your own thermal management solution using components in Cypress's PSoC Creator™ software (included in this kit) or by altering example projects provided with this kit.

The PSoC Thermal Management Expansion Board Kit (TME EBK) is used with the PSoC family of devices and is specifically designed and packaged for use with the PSoC 3 device family. PSoC 3 is a programmable system-on-chip platform that combines precision analog and digital logic with a high performance, single-cycle, 67MHz 8051 processor. With the flexibility of the PSoC architecture, you can easily create your own custom thermal management solution on chip with the exact functionality you need, in the way you want it—no more, no less.

1.1 Features

The TME EBK is intended to provide a demonstration and development platform for developing system thermal management co-processor solutions with compelling example projects that demonstrate a variety of modes:
Temperature monitoring
Open-loop and closed-loop fan control
Thermal zone management: the relationship between temperatures and cooling functions
Algorithms to detect thermal and cooling failures or warnings

Figure 1-1 shows a simplified block diagram of the components on the TME EBK and how they interact to aid in understanding of the hardware.

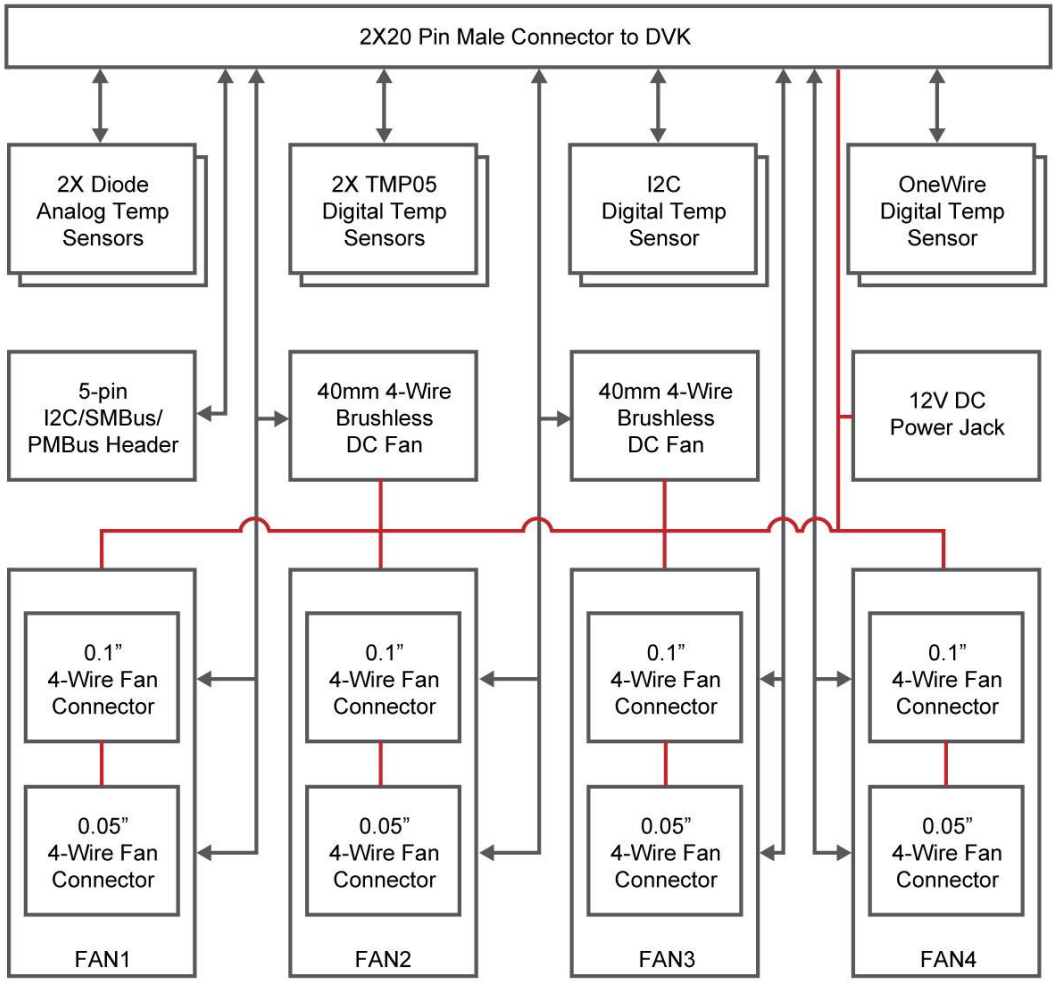

Figure 1-1: TME EBK Block Diagram

1.2 About the KIT

The PSoC Thermal Management Expansion board kit (TME) consists of:

Cypress TME EBK
Quick Start Guide
Power DC Adaptor 12V/2A
System CD containing:

- User's Guide (this document)
- PSoC Creator and pre-requisite software
- PSoC Programmer and pre-requisite software
- TME Example Firmware for the CY8CKIT-001 DVK
- Firmware based (open loop) Fan Control
- Hardware based (closed loop) Fan Control
- Thermal Management System
- TME Example Firmware for the CY8CKIT-030 DVK
- Firmware based (open loop) Fan Control
- Hardware based (closed loop) Fan Control
- Thermal Management System
- Application Note (AN66627) "PSoC® 3 and PSoC 5 Intelligent Fan Controller"
- Application Note (AN60590) "Temperature Measurement Using Diode"
- Datasheets for key TME EBK components

Figure 1-2 shows the photograph of the TME EBK contents.



Figure 1-2: TME EBK Package Contents

1.3 PSoC Creator

Cypress's PSoC Creator software is a state-of-the-art, easy-to-use integrated development environment (IDE) that introduces a game changing, hardware and software design environment based on classic schematic entry and revolutionary embedded design methodology.

With PSoC Creator, you can:

Draw a schematic of the hardware circuit you would like to build inside PSoC and the tool will automatically place and route the components for you

Eliminate external CPLDs or standard logic ICs by integrating state machines and simple glue logic in your design

Trade-off architecture decisions between hardware and software, allowing you to focus on what matters and getting you to market faster

PSoC Creator also enables you to tap into an entire tools ecosystem with integrated compiler tool chains, RTOS solutions, and production programmers to support PSoC 3.

1.4 Getting Help

Certified as a Cypress Authorized Design Partner, Terasic offers design expertise in rapidly developing PSoC Solutions to get your products into production quickly and reducing your development and BOM costs. Terasic provides customized board designs for academia and industry.

For additional information visit:

www.cypress.com/go/CY8CKIT-036
or
http://tme.terasic.com

For support please contact:

Online: www.cypress.com/go/support
Telephone (24x7): +1-800-541-4736 ext. 8 (USA)
+1-408-943-2600 ext. 8 (International)

Chapter 2

TME EBK Architecture

This chapter provides information about the architecture and block diagram of the TME EBK.

2.1 Layout and Components

The picture of the TME EBK is shown in Figure 2-1 and Figure 2-2. They depict the layout of the board and indicate the locations of the connectors and key components.

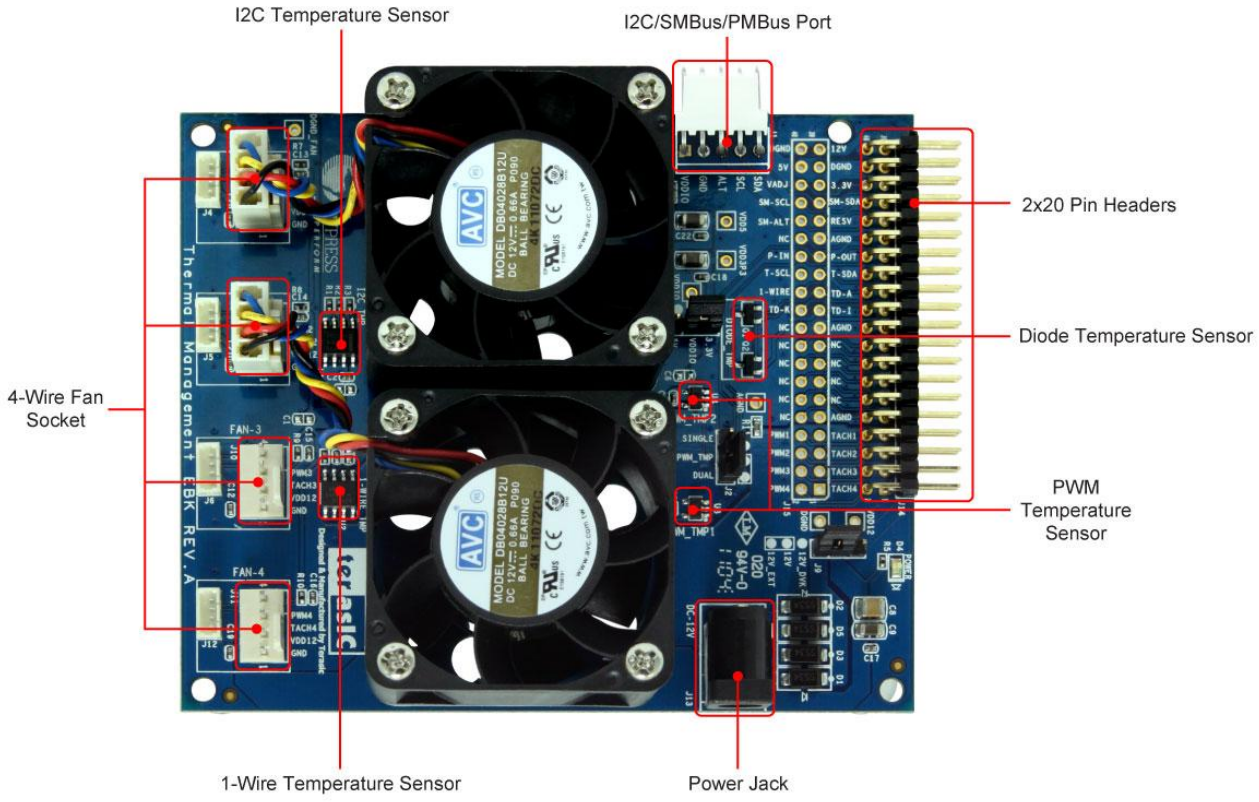

Figure 2-1: TME PCB (Top)

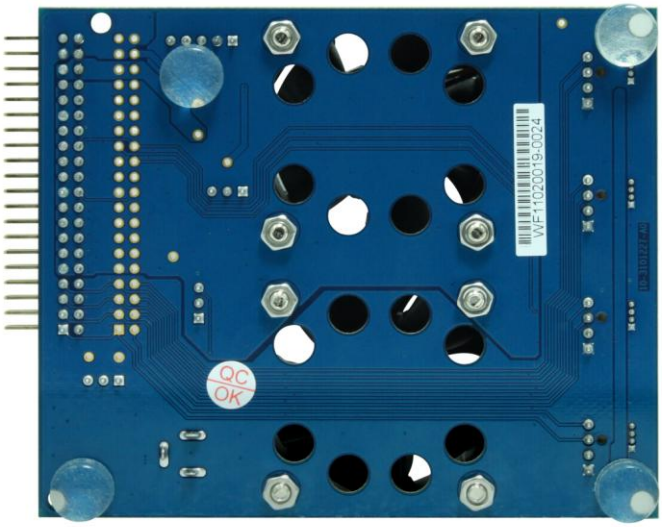

Figure 2-2: TME PCB (Bottom)

2.2 Thermal Management Solution on the TME

The TME EBK contains two 4-wire, 12V brushless DC fans with connectors to support an additional 2 fans for designers who need to prototype with their own specific fan models. 6 temperature sensors (4 different kinds) are also installed on the kit: 1) TMP175 I2C digital temperature sensor, 2) 2x TMP05 PWM output digital temperature sensors, 3) DS18S20 "One Wire" digital temperature sensor and 4) 2x MMBT3094 temperature diodes. This combination of hardware elements enables designers to rapidly prototype thermal management solutions in a variety of configurations.

TME EBK also provides an I2C/SMBus/PMBus compatible header to support systems that have a requirement for communication with a host controller. All of this functionality is implemented on a single PSoC 3. The TME routes all the input/output signals for thermal management to a PSoC 3 mounted on a development kit platform such as the CY8CKIT-001 PSoC Development Kit or CY8CKIT-030 PSoC 3 Development Kit. PSoC 3 is not mounted on the TME EBK itself.

Figure 2-3 shows a functional diagram of the PSoC Thermal Management solution. This solution enables control of up to 4x 4-wire fans using MCU based firmware control or hardware control. Fan drive signals are generated by independent hardware PWM blocks in PSoC to drive the 4 wire fans. Tachometer signals from the fans are interpreted by PSoC to determine fan rotational speeds. In hardware control mode, speed control is implemented entirely in hardware (no MCU intervention required). In firmware control mode, speed control can be achieved by the firmware running on PSoC with CPU intervention. In both cases, fan stall or rotor lock faults are detected by hardware.

To support digital sensor temperature sensing, standard PSoC interfaces are used where possible (such as I2C) and custom PSoC components have been developed for non-typical digital sensors such as the PWM output TMP05 sensor. This is explained in Section 4 of this User's Manual. For analog sensors, PSoC also provides on-board filtering, multiplexing and a 0.1% accurate internal voltage reference for high resolution and highly accurate temperature sensor measurement.

One of the example projects provided with the TME EBK shows an example of how to aggregate temperature sensor readings using a variety of methods and the resultant "zone" temperature used to set individual fan speeds – this is referred to as defining a "thermal zone". The example project shows how each fan can be configured independently to be dependent on any of the available temperature sensors in any combination. It also gives some examples of how the composite "zone temperature" can be used to determine the required fan speed to achieve system cooling needs.

Although not included in the example projects provided, PSoC 3 devices also include non-volatile EEPROM memory that can be used to store sensor calibration information or for event/fault logging purposes. Communication with a host controller or management processor can be achieved via I2C, SMBus, PMBus or a variety of other communications protocols implemented with easy-to-use PSoC Creator component blocks.

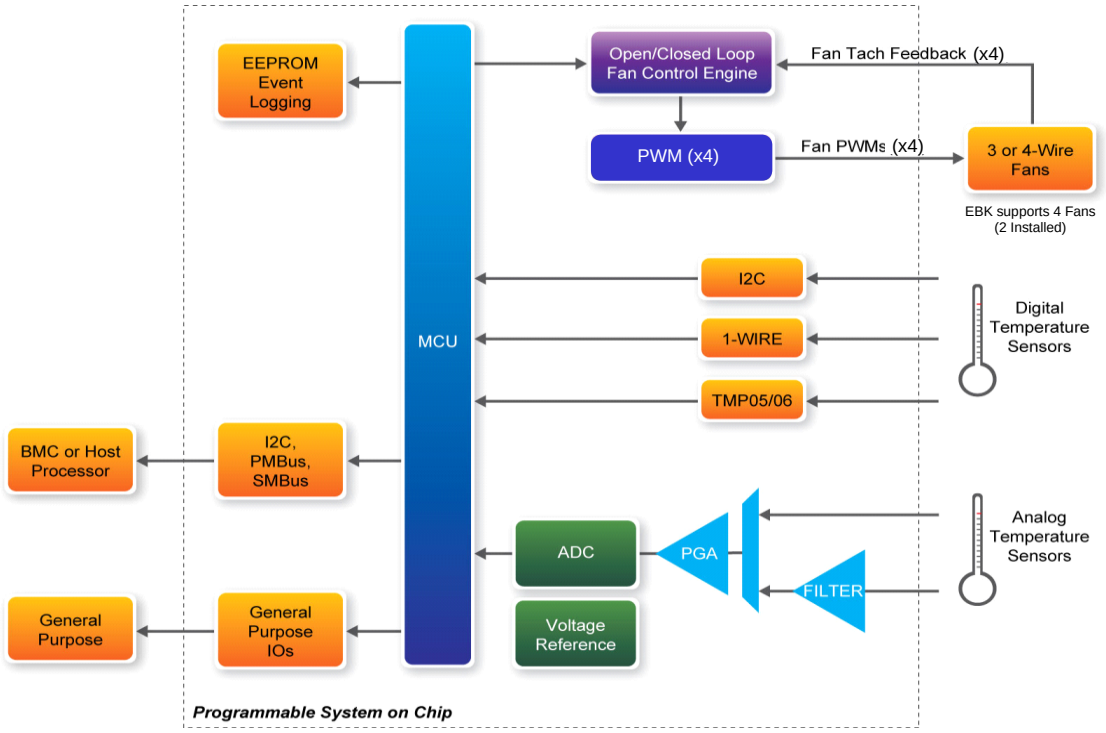

Figure 2-3: Thermal Management Functional Block Diagram

Note that TME EBK hardware limits support to a maximum of 4 fans. The PSoC 3 Thermal Management solution can be easily extended to support up to 16 fans or more in a single device. Contact Cypress for further information on the full PSoC Thermal Management solution.

Chapter 3

TME EBK Hardware Overview

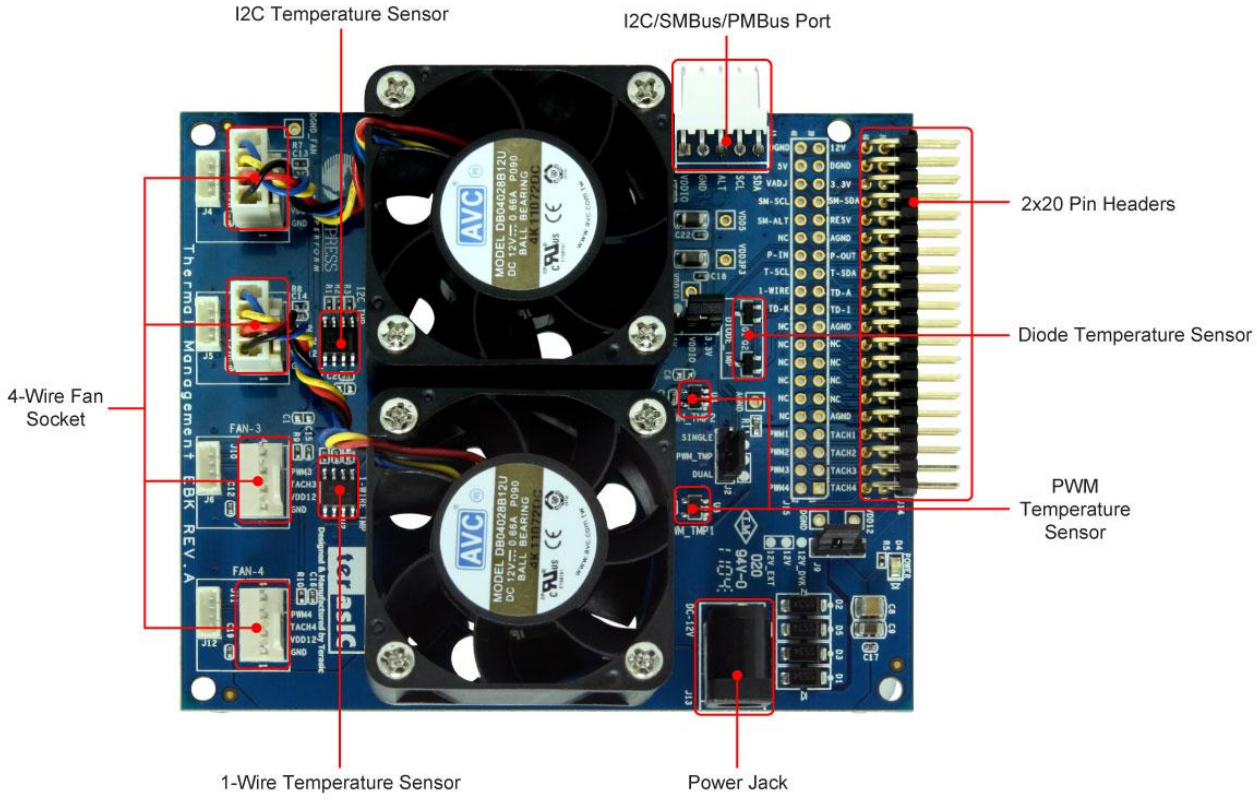

Figure 3-1: TME Hardware Components

This chapter describes the specifications of the components used on the TME EBK.

3.1 2x20 pin Interface Header

The 40-pin interface (2×20 pin header) provides a mechanism to connect the TME EBK to a Cypress development kit platform.

Table 3-1 lists the pin assignments of the 2x20 connector.

Table 3-1: 2x20 Header (J14) Pin Definition

Description	*Signal*	*Pin*	*Pin*	*Signal*	*Description*
Tachometer signal from Fan #4	TACH4	1	2	PWM4	PWM speed control for Fan #4
Tachometer signal from Fan #3	TACH3	3	4	PWM3	PWM speed control for Fan #3
Tachometer signal from Fan #2	TACH2	5	6	PWM2	PWM speed control for Fan #2
Tachometer signal from Fan #1	TACH1	7	8	PWM1	PWM speed control for Fan #1
Analog Ground	AGND	9	10	NC	-
-	NC	11	12	NC	-
-	NC	13	14	NC	-
-	NC	15	16	NC	-
-	NC	17	18	NC	-
Analog Ground	AGND	19	20	NC	-
Temperature diode current source	TD-I	21	22	TD-K	Temperature diode cathode
Temperature diode anode	TD-A	23	24	1-WIRE	One wire temperature sensor
I2C temperature sensor data	T-SDA	25	26	T-SCL	I2C temperature sensor clock
PWM temperature sensor output	P-OUT	27	28	P-IN	PWM temperature sensor input
Analog Ground	AGND	29	30	NC	-
Reserved	RESV	31	32	SM-ALT	Alert Signal (I2C/SMBus/PMBus)
Serial Data (I2C/SMBus/PMBus)	SM-SDA	33	34	SM-SCL	Serial Clock (I2C/SMBus/PMBus)
3.3V power from DVK	3.3V	35	36	VADJ	unused
Digital Ground	DGND	37	38	5V	5V power from DVK
Optional 12V power from DVK	12V	39	40	DGND	Digital Ground

3.2 TME EBK Headers and Jumpers

A number of jumpers are provided on the TME EBK.

Table 3-2 lists the default jumper settings for the board.

Table 3-2: TME Jumper Settings

Headers and Jumpers	*Description*	*Factory Default Configuration*
J1	5-pin header for connecting an external host or management processor via I2C/SMBus/PMBus	Connector fitted
J2	3-pin header to choose between single sensor or dual sensor (daisy chain) connection for the PWM temperature sensors. Place jumper in 1-2 position to enable dual sensor daisy-chain mode	1-2 position (dual sensor daisy chain)
J3	3-pin header to set logic signal levels for digital temperature sensors. Place in 1-2 for 5V interfacing. Place in 2-3 position to 3.3V interfacing	2-3 position (3.3V interfacing)
J4	4-pin header (1.25mm pitch) to connect Fan 1. Supplies 12V power, ground, PWM drive and tachometer	Not connected

	feedback. All signals replicated on J7	
J5	4-pin header (1.25mm pitch) to connect Fan 2. Supplies 12V power, ground, PWM drive and tachometer feedback. All signals replicated on J8	Not connected
J6	4-pin header (1.25mm pitch) to connect Fan 3. Supplies 12V power, ground, PWM drive and tachometer feedback. All signals replicated on J10	Not connected
J7	4-pin header (2.54mm pitch) to connect Fan 1. Supplies 12V power, ground, PWM drive and tachometer feedback. All signals replicated on J4	Connected to Fan 1
J8	4-pin header (2.54mm pitch) to connect Fan 2. Supplies 12V power, ground, PWM drive and tachometer feedback. All signals replicated on J5	Connected to Fan 2
J9	3-pin header for fan power supply. Place in 1-2 position to source external power from the power jack (J13). Place in 2-3 position to source 12V power from the DVK.	1-2 position (fan power from J13)
J10	4-pin header (2.54mm pitch) to connect Fan 3. Supplies 12V power, ground, PWM drive and tachometer feedback. All signals replicated on J6	Not connected
J11	4-pin header (2.54mm pitch) to connect Fan 4. Supplies 12V power, ground, PWM drive and tachometer feedback. All signals replicated on J12	Not connected
J12	4-pin header (1.25mm pitch) to connect Fan 4. Supplies 12V power, ground, PWM drive and tachometer feedback. All signals replicated on J11	Not connected
J13	Power Jack. 12V DC nominal	Connector fitted
J14	2×20 pin header for connecting to PSoC DVK	Connector fitted
J15	2×20 pin header that replicates signals on J14 for easy connection to a logic analyzer or oscilloscope	Open

3.3 PWM Output Digital Temperature Sensors

The TMP05 is a monolithic temperature sensor that generates a modulated serial digital output (PWM) signal. The duty cycle of this PWM signal is proportional to the ambient temperature measured by the device. The high period (TH) of the PWM remains generally static over all temperatures, while the low period (TL) varies. The ratio of TH/TL provides a method for determining the temperature as per this formula: Temperature (°C) = 421 – (751 × TH/TL).

The TMP05 sensors have a 2 pin interface: 1) CONV/IN input that when pulsed by PSoC initiates a new temperature measurement, 2) OUT output that provides a PWM signal that can be decoded using the formula above to determine ambient temperature. The TMP05 sensors support a daisy chain mode of operation where the OUT signal of the first sensor can be directly connected to the CONV/IN input of the subsequent sensor. The OUT of the 2nd sensor carries the PWM signals from both sensors. Many sensors can be daisy chained in this fashion, with the final OUT signal carrying the PWM temperature encodings from all sensors in the daisy chain.

This sensor is generally operated in one of two modes: (1) one-shot mode and (2) continuous mode. For more detailed information, please refer to the TMP05 device datasheet which is available on the device manufacturer's website or under the datasheet folder of the kit CD.

Figure 3-2 shows the ***TMP05 Digital Temperature Sensor Interface*** custom component instantiated in a PSoC Creator Schematic configured to support the 2 TMP05 sensors on the TME in daisy chain mode. A single ***TMP05 Digital Temperature Sensor Interface*** component supports up to 4x TMP05 sensors in a single daisy chain. P_IN and P_OUT are the TMP05 sensor signals available on the 2x20 pin header on TME EBK.

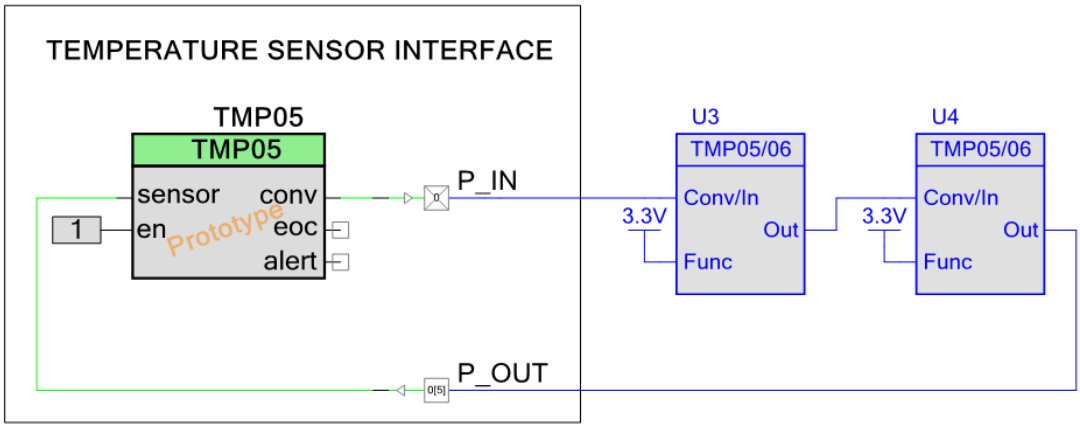

Figure 3-2: TMP05 Temperature Sensor Connectivity

More information regarding the ***TMP05 Digital Temperature Sensor Interface Component*** is available in AN65977 – "PSoC® 3 and PSoC 5 - Creating an Interface to a TMP05/TMP06 Digital Temperature Sensor".

3.4 I2C Digital Temperature Sensor

The PSoC TME EBK demonstrates I2C temperature sensing capability using a two-wire I2C compatible digital temperature sensor, the TMP175. I2C digital temperature sensors are very common sensors for thermal management and are used in a variety of communication, computer, consumer, environmental, industrial and instrumentation applications due to the popularity of the I2C bus. For more detailed information, please refer to its datasheet which is available on manufacturer's website or under the datasheet folder of the kit CD.

Figure 3-3 shows the standard PSoC Creator *I2C Master* component instantiated in a PSoC Creator Schematic connected to the TMP175 sensor on the TME EBK. T_SDA and T_SCL represent serial data and serial clock respectively which are available on the 2x20 pin header on TME EBK.

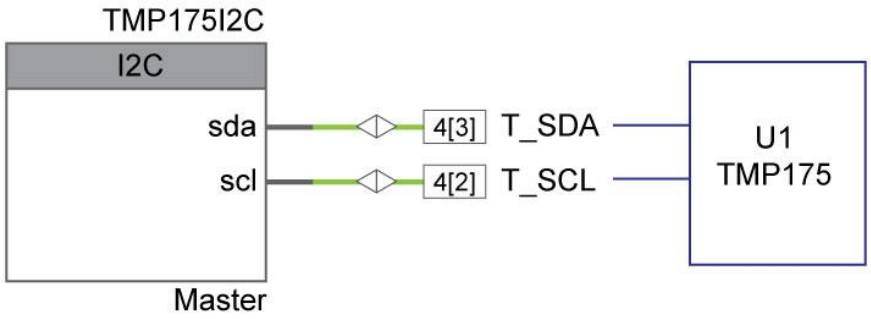

Figure 3-3: I2C Temperature Sensor Connectivity

The ***I2C Master*** component can be configured to run the I2C interface at 50, 100 or 400 kbps. Like any I2C bus application, multiple I2C temperature sensors such as the LM75 or TMP175 can be connected to the same I2C bus I/O pins on PSoC. Refer to the ***I2C Master*** component datasheet inside PSoC Creator for more details on this block.

3.5 1-Wire Digital Temperature Sensor

The TME EBK has a Maxim DS18S20 1-wire high precision digital temperature sensor installed. The DS18S20 digital thermometer provides 9-bit resolution Celsius temperature measurements and has an alarm function with nonvolatile user-programmable upper and lower trigger points. The DS18S20 communicates over a proprietary 1-wire bus that by definition requires only one data line (and ground) for communication with a host microprocessor. It has an operating temperature range of –55°C to +125°C. For more detailed information, please refer to its datasheet which is available on the manufacturer's website or under the datasheet folder of the kit CD.

A one wire protocol interface PSoC Creator component is currently planned for future development, but is not yet available and is therefore not provided in this release of the TME EBK. Check the TME EBK link: www.cypress.com/go/CY8CKIT-036 for upgrades to the TME that might include this interface component in the future.

Figure 3-4 shows the connections for DS18S20 1-wire temperature sensor

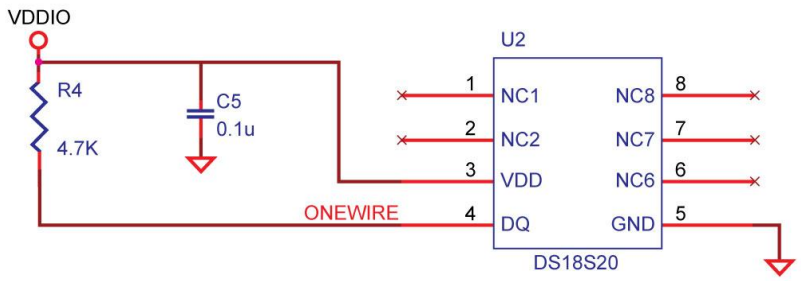

Figure 3-4: 1-Wire Temperature Sensor Connectivity

3.6 Diode Analog Temperature Sensors

MMBT3904 is a bipolar junction transistor (BJT) designed as a general purpose amplifier and switch. The useful dynamic range extends to 100 mA as a switch and to 100 MHz as an amplifier. The delta Vbe method described in Cypress Application Note AN60590 – "Temperature Measurement Using Diode" can be used with the TME EBK. Refer to that application note for the theory of operation and relevant mathematical equations. The implementation described in that application note is primarily driven by firmware due to the complexities associated with varying the source current fed to the BJT, filtering the ADC measurements and calibrating the analog sub-system all of which are required to achieve sufficiently high accuracy with these low cost temperature sensors.

Figure 3-5 shows the connections between PSoC and MMBT3904

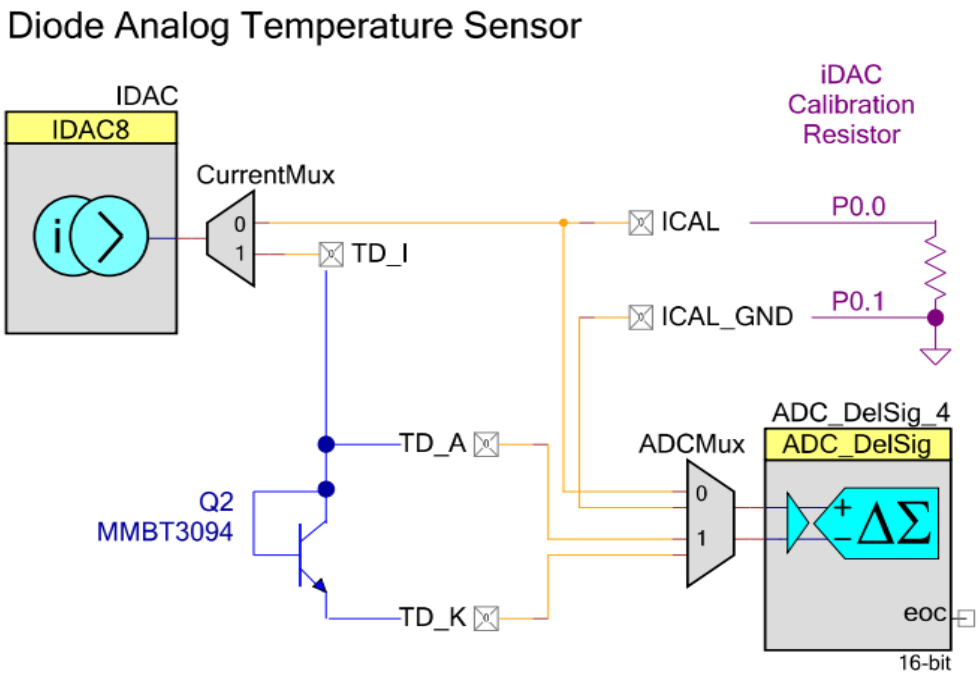

Figure 3-5: Diode Analog Temperature Sensor Connectivity

3.7 4-Wire Fan Connectors

The TME EBK provides 8 (4 pairs) industry standard 4-wire fan interface connectors, and two AVC 12V brushless DC fans. The fan speeds are controllable up to 13,000 RPM via PWM control, with tachometer output to calculate actual fan speeds. For more detailed information please refer to its datasheet which is available on the manufacturer's website or under the datasheet folder of the kit CD.

Table 3-3: Fan Connector Pinouts

Pin Number	Name	Colors	Description
1	GND	Black	GND
2	POWER	Red	12V DC power
3	TACH	Yellow	Frequency Generator Signal
4	PWM	Blue	PWM Control Signal

Figure 3-6 shows the connections between PSoC and the 2 fans installed on the TME EBK.

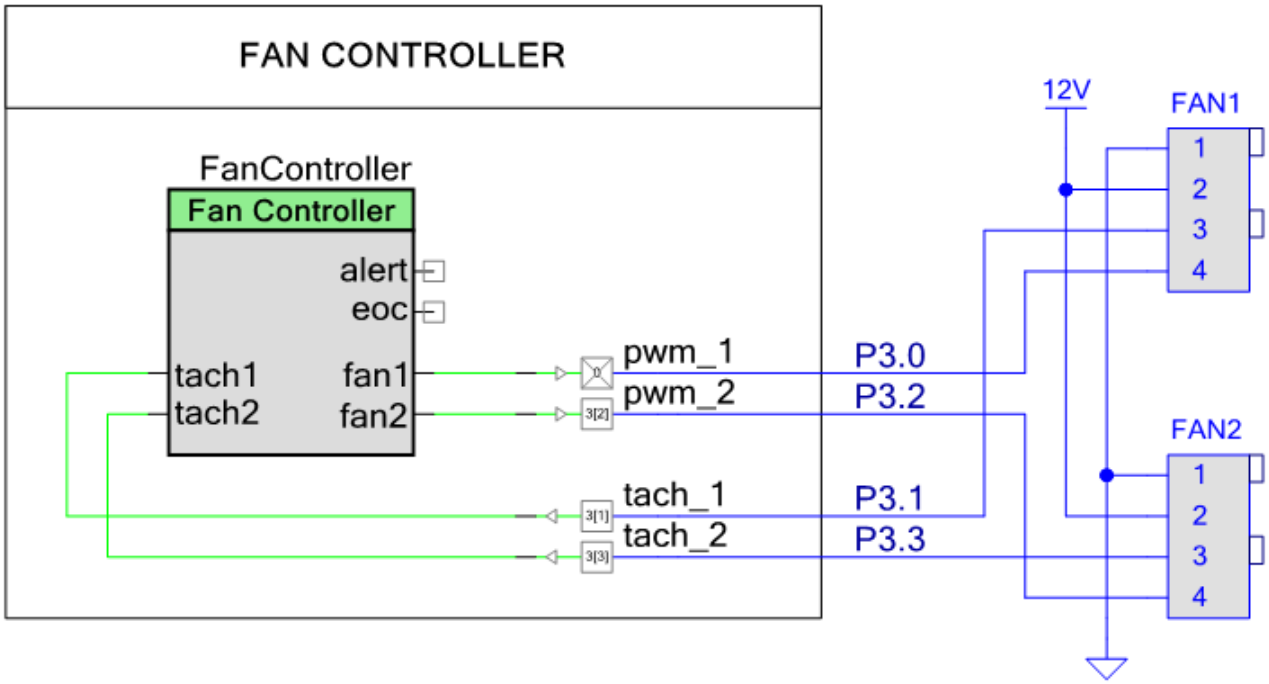

Figure 3-6: Fan Connectivity to PSoC

3.8 Development Kit (DVK) Compatibility

This kit contains an expansion board only and requires a Cypress development kit platform in order to use it. This kit is compatible with both the CY8CKIT-001 PSoC DVK and the CY8CKIT-030 PSoC 3 DVK.

NOTE: Early revisions of the CY8CKIT-001 PSoC Development Kit contained an early engineering sample release (ES2) of the PSoC 3 CY8C38xxx Device Family Processor Module which is not compatible with the example projects that accompany this kit. If you have an early revision of the kit you can upgrade free of charge at *www.cypress.com/go/psockitupgrade*

Chapter 4

Example Projects for the TME

4.1 Introduction

This section provides details on how to operate the hardware and run the example projects provided.

4.2 Software Installation

Perform the following steps to install the PSoC TME EBK software: Insert the kit CD into the CD drive of your PC. The CD is designed to auto-run and the kit menu should appear. (See **Figure 4-1**)

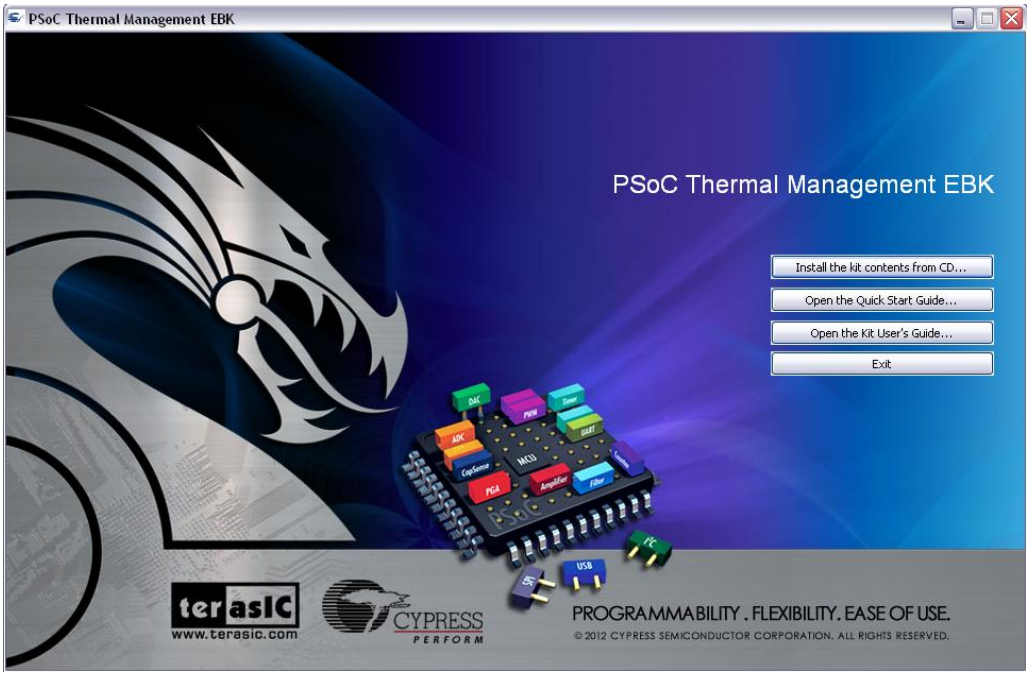

Figure 4-1: CD Autorun Kit Menu

NOTE: If auto-run does not execute, double-click **AutoRun** on the root directory of the CD.
After the installation is complete, the kit contents are available at the following location:
C:\Program Files\Terasic\PSoC Thermal Management EBK\1.0
On 64-bit Windows 7 installations, replace "*C:\Program Files"* with "*C:\Program Files (x86)*"

When installing the PSoC Thermal Management EBK software, the installer checks if your system has the required software. This includes PSoC Creator, PSoC Programmer, Windows Installer, .NET

framework, Adobe Acrobat Reader, and KEIL Compiler. If these applications are not installed, then the installer prompts you to install all pre-requisite software, which is also available on the kit CD. The software can be uninstalled using one of the following methods:

Go to **Start > Control Panel > Add or Remove Programs**; select appropriate software package; select the **Remove** button.

Go to Start > All Programs > Cypress > Cypress Update Manager > Cypress Update Manager; select the Uninstall button for the appropriate software package.

Insert the kit CD and click **Install the kit contents from CD** button. In the **CyInstaller for PSoC Thermal Management EBK 1.0 window**, select **Remove** from the Installation Type drop-down menu. Follow the instructions to uninstall. (**NOTE:** *this method will only un install the kit software and not all the other material/software that may have been installed along with the kit software*)

4.3 Hardware Setup

The kit includes example projects for both the CY8CKIT-001 PSoC DVK and the CY8CKIT-030 PSoC 3 DVK hardware platforms. The main difference between the projects for the two hardware platforms is the PSoC pin mapping. Other differences will be highlighted in the sections that describe details of the example projects. The following sections describe how to set up the hardware to run the example projects. For a given DVK base platform, the same hardware configuration applies to both example projects.

■ CY8CKIT-001 PSoC DVK

Using the pin header/prototyping breadboard area of the PSoC DVK base board, use jumper wires to make the following connections:

"VR" to P1_2
"SW1" to P1_4
"SW2" to P1_5

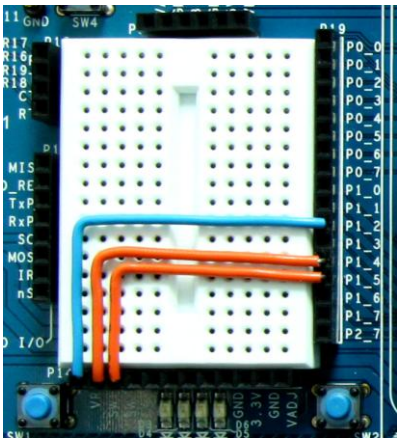

Figure 4-2: CY8CKIT-001 PSoC DVK Breadboard

Set the system to run at 3.3V using SW3 and set J6 “VDD DIG” and J7 “VDD ANLG” to VDD=3.3V using J6 and J7 as shown below:

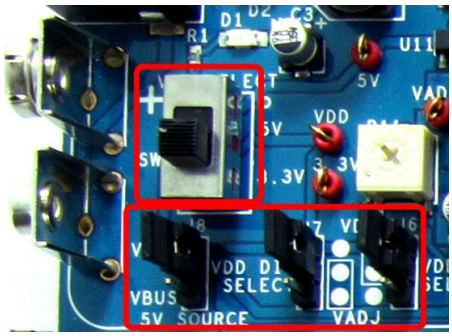

Figure 4-3: CY8CKIT-001 PSoC DVK Power Jumpers

Ensure that the LCD character display included with PSoC DVK is attached and that the LCD POWER jumper (J12) is in the ON position:



Figure 4-4: CY8CKIT-001 PSoC DVK LCD Power Jumper

Ensure that the VR_PWR jumper (J11) is installed:



Figure 4-5: CY8CKIT-001 PSoC DVK VR_POWER Jumper

CAUTION: Do not attach the TME EBK to the PSoC DVK until you have programmed the PSoC with one of the example projects. Some of the GPIOs routed to the TME EBK are tied to ground and this could cause hard shorts on PSoC I/O pins if firmware previously programmed into PSoC drives those pins. Instructions on how to program the example projects are covered in the example projects section.

■ CY8CKIT-030 PSoC 3 DVK

No jumper wires are required for the PSoC 3 DVK examples since the buttons and potentiometer are hardwired to GPIOs. Ensure that the LCD character display included with the PSoC 3 DVK is attached.

Set VDDD and VDDA to 3.3V using J10 and J11.

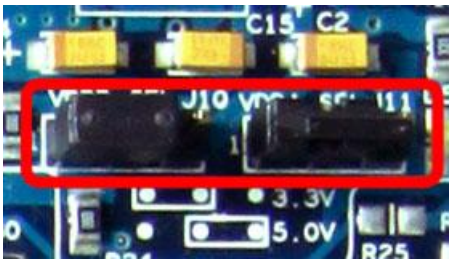

Figure 4-6: CY8CKIT-030 PSoC 3 DVK Power Jumpers

Ensure that POT_PWR is enabled by installing a jumper on J30.



Figure 4-7: CY8CKIT-030 PSoC 3 DVK Potentiometer Power

CAUTION: Do not attach the TME EBK to the PSoC DVK until you have programmed the PSoC with one of the example projects. Some of the GPIOs routed to the TME EBK are tied to ground and this could cause hard shorts on PSoC I/O pins if firmware previously programmed into PSoC drives those pins. Instructions on how to program the example projects are covered in the example projects section.

4.4 Example Projects

The TME EBK includes three example projects:

Firmware Based Fan Control
Closed-Loop Hardware Based Fan Control
Thermal Management System

The kit includes project workspaces for both the CY8CKIT-001 PSoC DVK and the CY8CKIT-030 PSoC 3 DVK.

To begin, go to the ***Start Page*** in PSoC Creator and under the ***Examples and Tutorials*** section, expand The ***Kits and Solutions*** entry as shown below. Expand the ***TME EBK*** entry and double click on the workspace file that matches your development kit (***CY8CKIT-001_Examples.cywrk*** or ***CY8CKIT-030_Examples.cywrk)***. The example projects will be copied to any location you specify on your hard drive and then opened automatically.

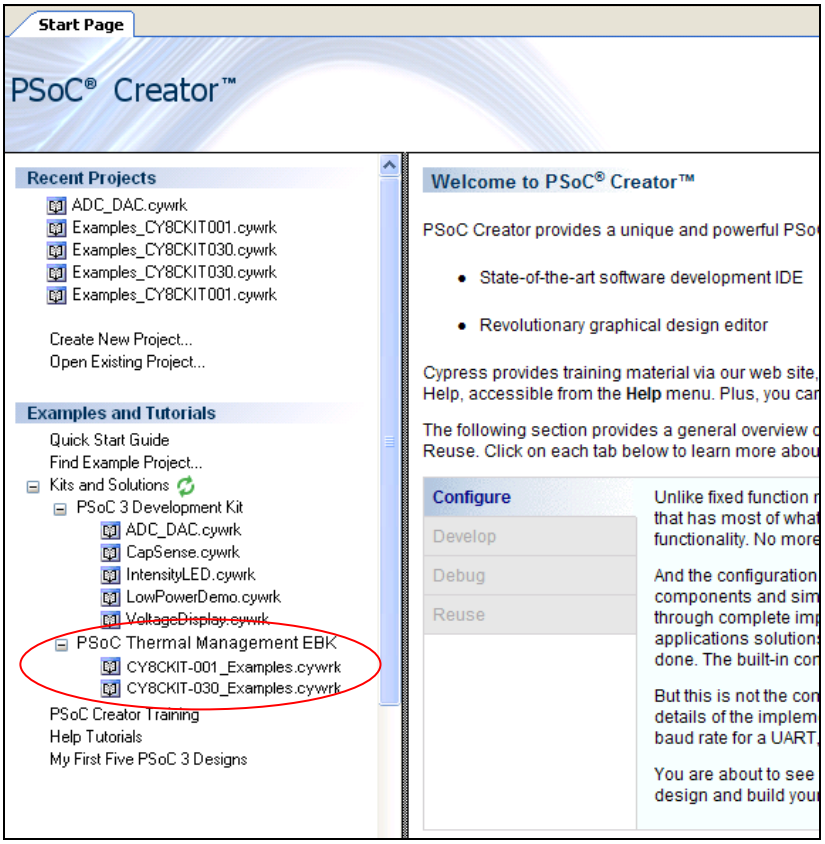

Figure 4-8: PSoC Creator Start Page

The example projects will be displayed in the ***Workspace Explorer*** window as shown in the example below for the CY8CKIT-001 PSoC DVK:

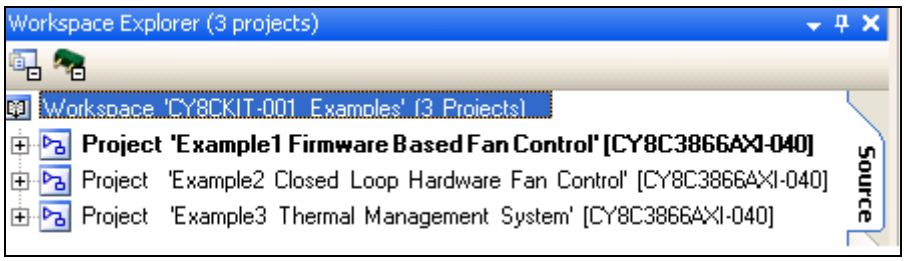

Figure 4-9: Workspace Explorer View

■ Running the Example Firmware: CY8CKIT-001 PSoC DVK

Make sure the hardware has been configured according to the Hardware Setup section.

1. If this is the first time that the example project firmware is being programmed into PSoC, make sure the TME EBK is not connected to the PSoC DVK
2. Apply 12 VDC power to the PSoC DVK
3. Attach the MiniProg3 first to a USB port on the PC and then to the PROG port on the CY8CKIT-009 PSoC 3 Processor Module
4. In PSoC Creator, set the appropriate example project as active by right clicking on it in the ***Workspace Explorer*** and selecting ***Set As Active Project***
5. In PSoC Creator, select ***Debug*** > ***Program*** to program PSoC
6. Remove power from the PSoC DVK and attach the TME EBK to Port A of the PSoC DVK
7. The PSoC DVK and the TME EBK boards should be powered separately. Power the PSoC DVK first
8. The TME EBK includes a 12V DC high-current power supply that is capable of supplying the inrush current needed by the fans installed on that kit. Use that power supply connected to the power connector (J13) and set the power jumper (J9) on the TME EBK board to “12V_EXT” (the default setting)
9. If the TME EBK cannot be detected by PSoC, status debug messages will be displayed on the LCD to assist with rectifying the problem

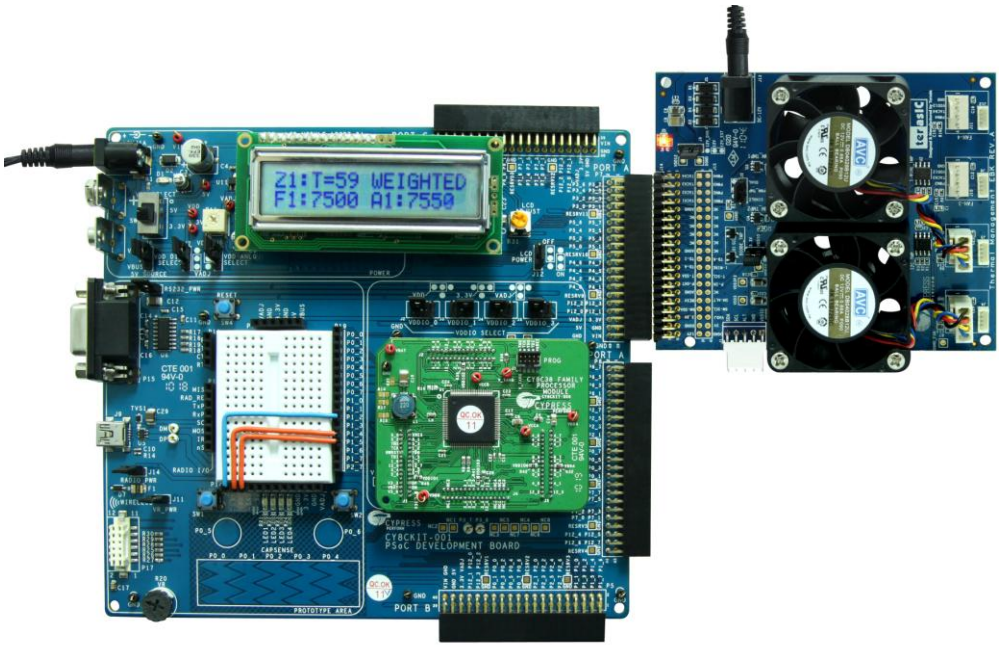

Figure 4-10: CY8CKIT-001 PSoC DVK with TME EBK Connected to Port A

(Running Example 3)

■ Running the Example Firmware: CY8CKIT-030 PSoC 3 DVK

Make sure the hardware has been configured according to the Hardware Setup section.

1. If this is the first time that the example project firmware is being programmed into PSoC, make sure the TME EBK is not connected to the PSoC 3 DVK
2. Attach a USB cable from the PC to the PSoC 3 DVK Program/Debug USB port (use J1 - the USB connector closest to the corner of the board)
3. In PSoC Creator, set the appropriate example project as active by right clicking on it in the ***Workspace Explorer*** and selecting ***Set As Active Project***
4. In PSoC Creator, select ***Debug*** > ***Program*** to program PSoC
5. Remove the USB cable from the PSoC 3 DVK and attach the TME EBK to Port E of the PSoC 3 DVK
6. Re-attach a USB cable from the PC to the PSoC 3 DVK Program/Debug USB port (use J1 - the USB connector closest to the corner of the board)
7. The TME EBK includes a 12 VDC high-current power supply that is capable of supplying the inrush current needed by the fans installed on that kit. Use that power supply connected to the power connector (J13) and set power jumper (J9) on the TME EBK board to “12V_EXT” (the default setting)
8. If the TME EBK cannot be detected by PSoC, status debug messages will be displayed on the LCD to assist with rectifying the problem
9. Going forward, every time PSoC is re-programmed, press the Reset (SW1) button on the PSoC 3 DVK to run the newly programmed firmware image

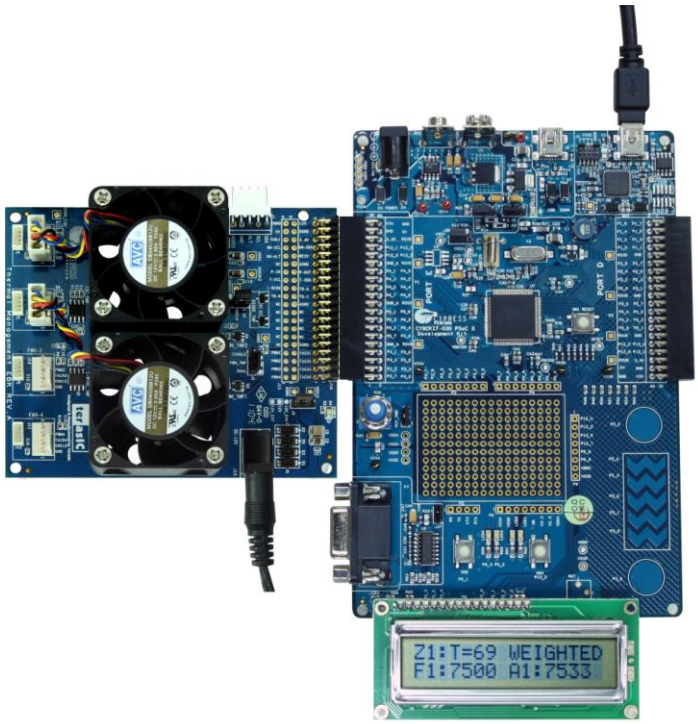

Figure 4-11: CY8CKIT-030 PSoC 3 DVK with TME EBK Connected to Port E

(Running Example 3)

■ Example1: Firmware Based Fan Control

■ Overview

The purpose of this example is to demonstrate the Fan Controller Component controlling the two fans on the TME EBK in ***Firmware (CPU)*** control mode. It is called Open Loop to describe the fact the hardware components used in this implementation are not regulating the fan speeds by themselves. Instead, PSoC firmware is entirely responsible for managing fan speeds.

If the project is running correctly, the text displayed on the debug LCD should display something like **Figure 4-12:**

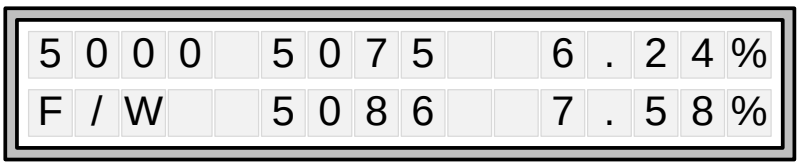

Figure 4-12: Example1 LCD Display

The fans spin up to an initial speed target, or desired speed, of 5000 revolutions per minute (RPM) set by a **#define** in **main.c**. The desired speed is shown in the top left corner of the LCD display.

The user can adjust the desired speed up or down in steps of 500 RPM by pressing buttons on the DVK as follows:

CY8CKIT-001 PSoC DVK: SW1=Decrease Speed, SW2=Increase Speed
CY8CKIT-030 PSoC 3 DVK: SW2=Decrease Speed, SW3=Increase Speed

A firmware algorithm responds to changes in desired speed by adjusting the duty cycle for both fans and continuously works at fine tuning the duty cycle until the actual fan speeds approach the desired speed. The center section of the LCD display shows the actual speed in RPMs of both fans.

The right side of the LCD display shows the duty cycles of each fan for reference. Note that the duty cycles may not be the same for both fans, even though the desired speed is the same. This is due to variations in the actual electromechanical performance of the 2 fans.

The "F/W" text displayed on the bottom left of the display highlights that this project is using firmware speed control. This is done because the LCD display in example project 2 (when hardware closed loop control is introduced) is virtually identical, so this text helps to identify which example project is currently running on PSoC.

■ Technical Details

The fan control portion of the Example 1 Top Level Schematic is shown in **Figure 4-13**

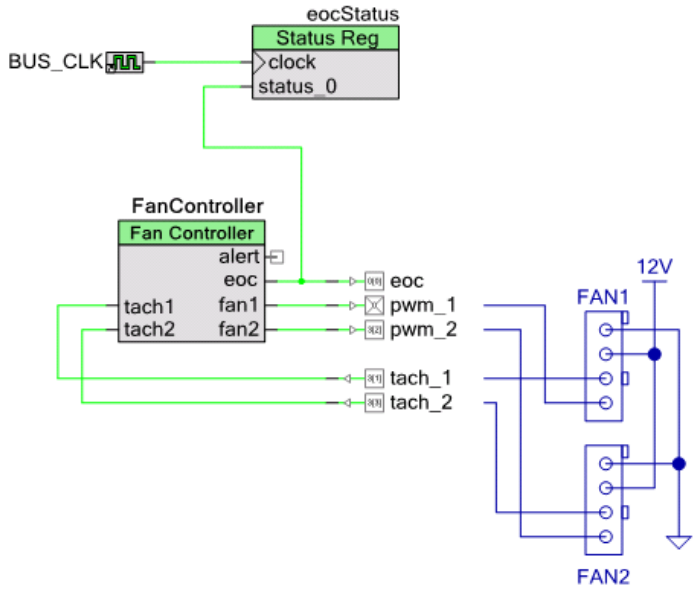

Figure 4-13: Example1 Project Schematic

The ***Fan Controller*** Component can be configured by double-clicking on it in the Top Level schematic for Example 1. This will open the customizer ***Basic Tab***. For this example, ensure that the control mode is set to ***Firmware (CPU)***. Other options are not important for this example. (See **Figure 4-14**)

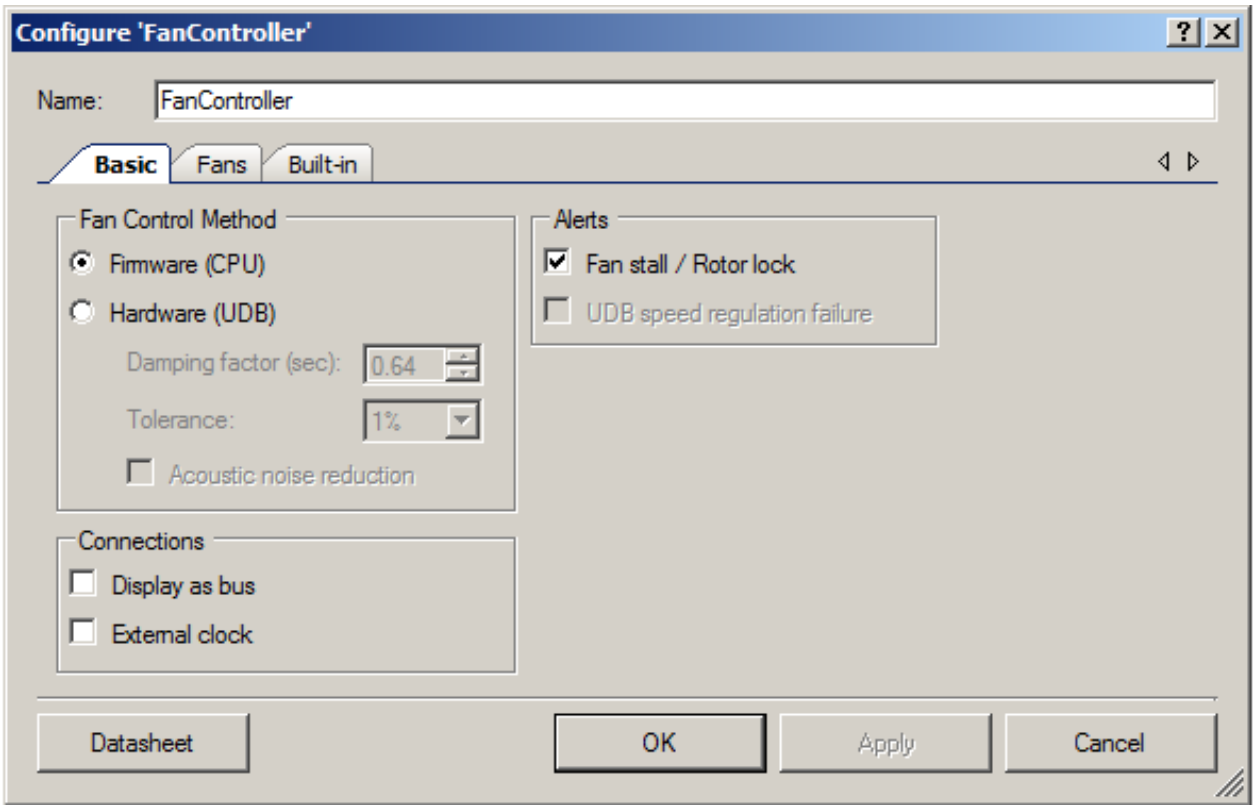

Figure 4-14: Example1 Fan Controller Customizer – Basic Tab

Click on the ***Fans Tab*** to setup the electromechanical properties of the fans installed on the TME EBK. The RPM A, Duty A (%) and the RPM B, Duty B (%) parameters represent two data points from the fan's PWM duty cycle to speed conversion chart. That information can be obtained from the fan manufacturer's datasheet. The parameters shown below match the fans installed on the TME EBK. (See **Figure 4-15**)

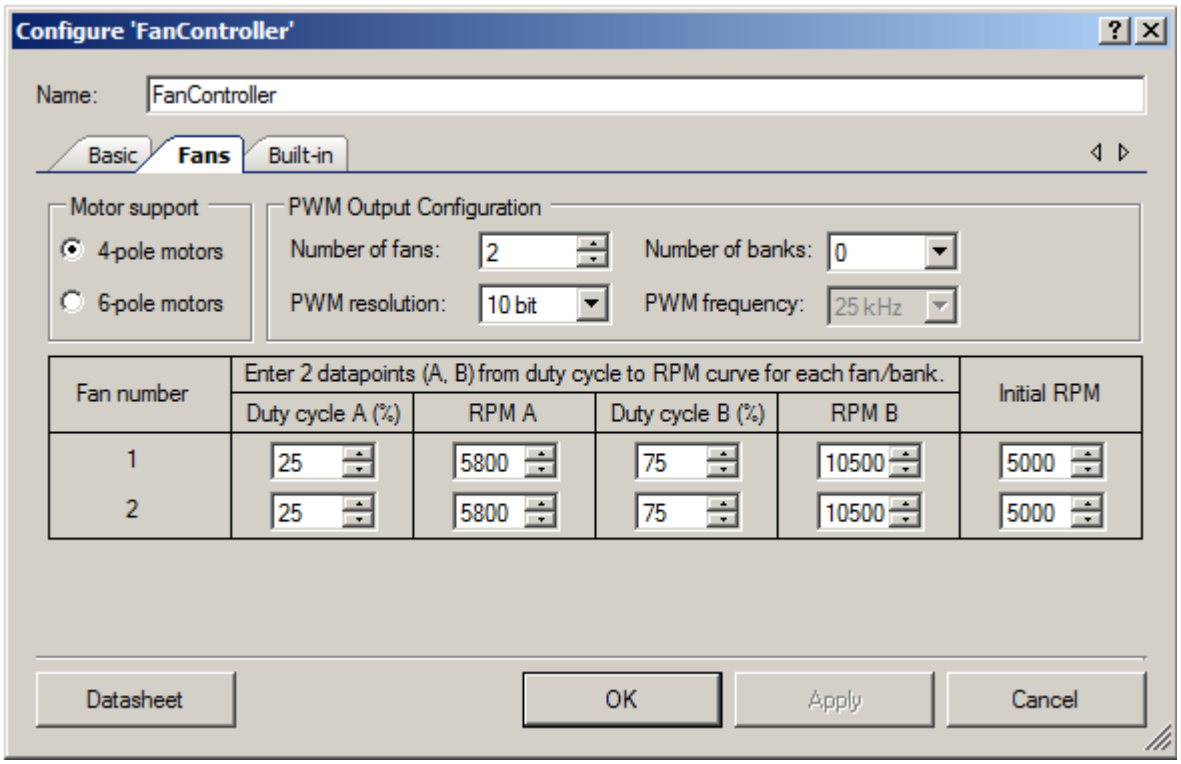

Figure 4-15: Example1 Fan Controller Customizer – Fans Tab

Firmware is able to control the fans using these provided Fan Controller Component APIs:

FanController_Start()
FanController_GetActualSpeed(fanNumber)
FanController_SetDutyCycle(fanNumber, dutyCycle)

The time taken to measure the actual speeds of each fan is relatively long, particularly for slow rotational speeds. For example, a fan running at 1000 RPM equates to a 60 ms rotation time. The MCU core inside PSoC is capable of running at clock speeds as high as 67MHz. Since the speed measurement hardware needs to run so much more slowly than the firmware can, some method of alerting the firmware that a new fan speed measurement is available is desirable. This enables the MCU to perform other tasks while waiting for new fan speed data to become available.

This synchronization mechanism is achieved using the ***eoc*** signal on the Fan Controller Component and the ***eocStatus*** Status Register (both are shown in the schematic in **Figure 4-13**). Every time the Fan Controller component completes a new speed measurement for both fans, it pulses the eoc signal high momentarily which is latched by the status register.

In Example1, the main code loop polls for a "1" in the ***eocStatus*** register and only then runs its basic speed adjustment algorithm. The speed adjustment algorithm detects if the current fan speed is too fast or too slow (within a user defined threshold). If the speed is outside the threshold, the algorithm adjusts the PWM duty-cycle (up or down) by either a large or small value depending on how far out of range the current speed is. Examine the main code loop in ***main.c*** for details.

Note: that the ***eoc*** signal in this project is also routed to a GPIO (P0.0) so that it can be observed on a scope or logic analyzer.

■ Firmware Flowchart

The firmware flowchart for the Example1 project is shown below (See **Figure 4-16**)

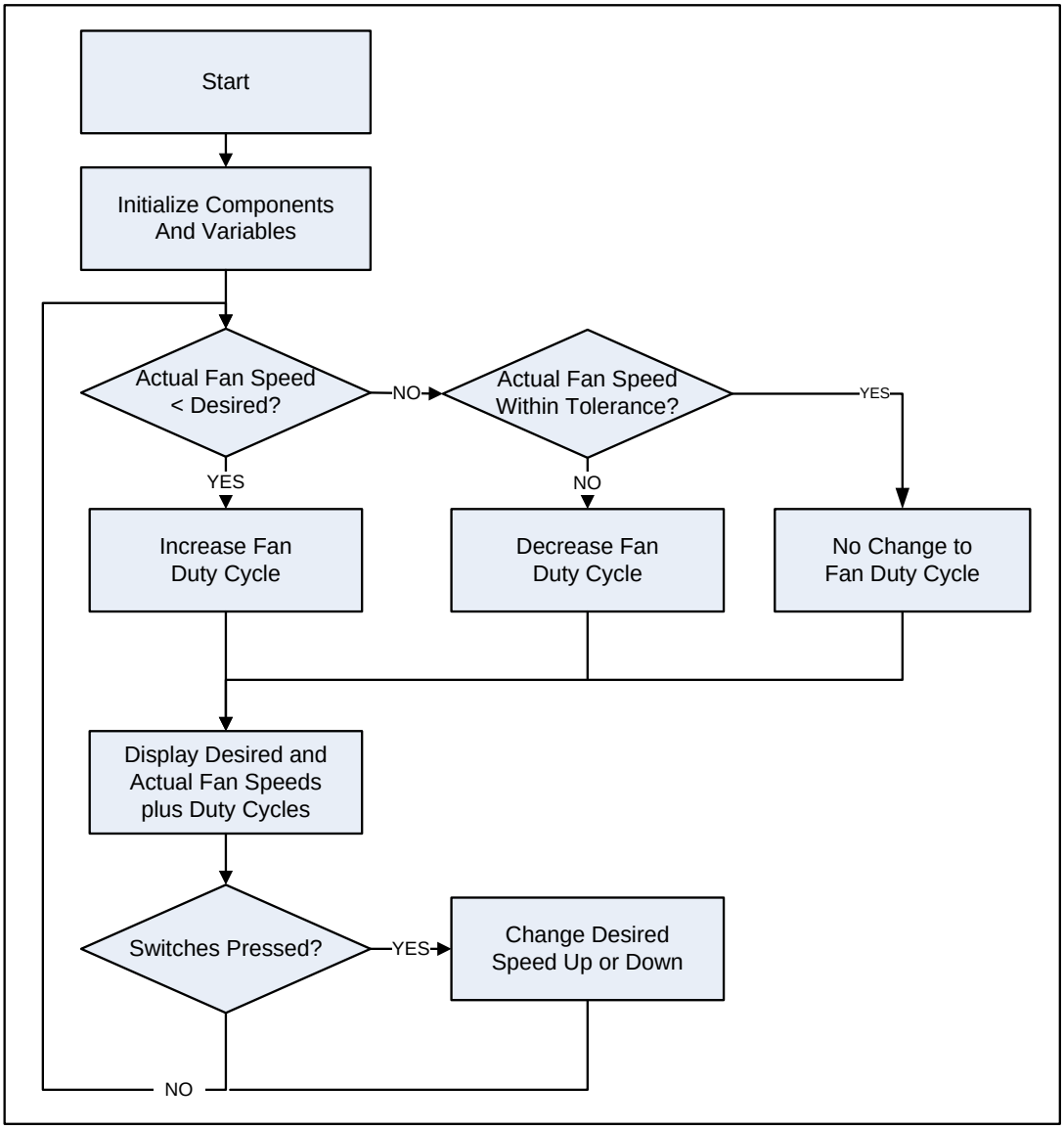

Figure 4-16: Example1 Firmware Flowchart

■ Example2: Closed-Loop Hardware Based Fan Control

■ Overview

The purpose of this example is to demonstrate the Fan Controller Component controlling the two fans on the TME EBK in ***Hardware (UDB)*** control mode. It is called Closed Loop to describe the fact the hardware components used in this implementation are working together to regulate the fan speeds by themselves. PSoC firmware *plays no part* in managing the fan speeds in this configuration.

If the project is running correctly, the text displayed on the debug LCD should display something like **Figure 4-17**

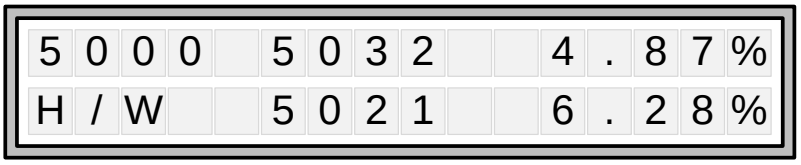

Figure 4-17: Example2 LCD Display

The user interface for this example is identical to Example1. Use the 2 switches on your DVK to adjust desired fan speeds up or down. In Example2, a hardware control algorithm responds to changes in desired speed by adjusting the duty cycle for both fans and continuously works at fine tuning the duty cycle until the actual fan speeds approach the desired speed. The "H/W" text displayed on the bottom left of the display highlights that this project is using hardware speed control. Note that when a change in desired speed is requested through the DVK switches, you may notice that the actual speed initially jumps to a higher value than the desired speed (in response to a an increase speed request) or a lower value than the desired speed (in response to a decrease speed request) and then gradually settles to the correct value. This is because the ***Fan Controller*** component estimates the duty cycle required to achieve the desired speed based on the electromechanical properties of the fans entered into the ***Fans Tab*** of the customizer. This is an approximation only, but is used as a duty cycle starting point for the closed-loop hardware algorithm, which then regulates the fans to the correct desired speed.

Additionally, this example demonstrates the fault detection and alert signaling capabilities of the ***Fan Controller*** component. Fault detection and alert signaling are handled in hardware. The ***Fan Controller*** is capable of signaling two types of alerts:

Fan Stall/Rotor Lock: Occurs when the component detects that a fan has stopped spinning
Speed Failure: Occurs when a fan is unable to reach the desired speed

All alerts are routed to a common alert pin on the ***Fan Controller*** Component. The provided component application programmer interfaces (APIs) allow firmware to determine the exact source of the fault. In this example, the ***Alert*** pin is tied to an interrupt which clears the fault source and displays the fault state on the LCD screen. Fan stall faults can be simulated by unplugging a fan which disconnects the tachometer connection back to PSoC. Speed failures can be simulated by

setting the desired speed to a value that the fan is incapable of reaching. For example, setting the desired speed to 2000 RPM for the fans installed on TME EBK will generate a speed failure since those fans can run no slower than around 2000 RPM. In the event of an alert, the words “STALL” or “SPEED” will replace the current actual speed reading on the LCD display for that fan.

■ Technical Details

The fan control portion of the Example 2 Top Level Schematic is shown below in **Figure 4-18**

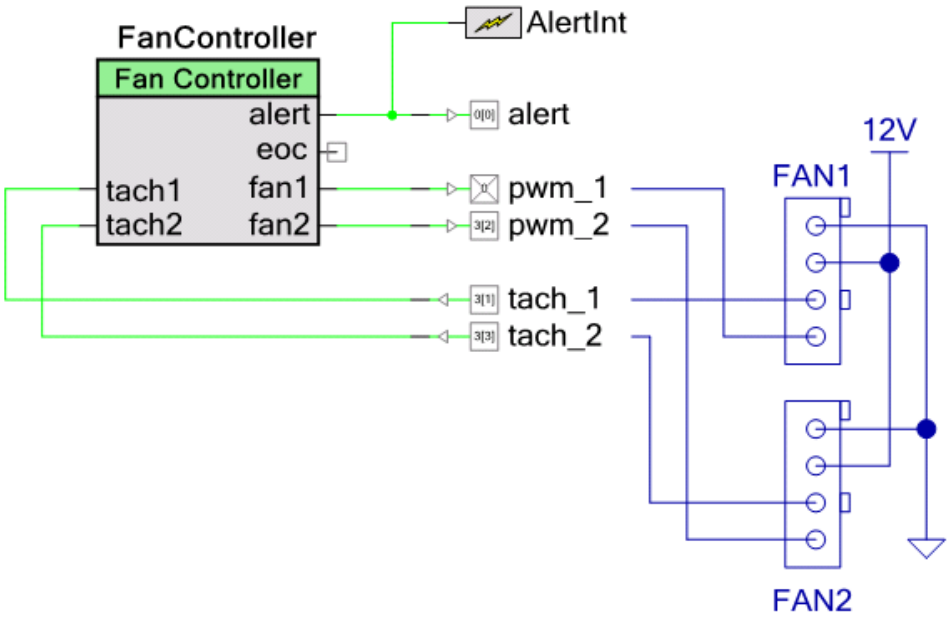

Figure 4-18: Example2 Schematic

Example2 implements a hardware controlled, closed-loop fan controller using the ***Fan Controller*** component in ***Hardware (UDB)*** control mode. Firmware does not control fan speeds but can still interact with the ***Fan Controller*** component using these provided APIs:

FanController_Start()
FanController_SetDesiredSpeed(fanNumber, rpm)
FanController_GetActualSpeed(fanNumber)

Unlike Example1, where the firmware must constantly monitor the actual fan speeds and make PWM duty cycle adjustments, here PSoC hardware blocks automatically adjust the PWM duty-cycles to maintain the desired speed. The FanController_GetActualSpeed() API is only used to report the current speed on the LCD display. Likewise, FanController_SetDesiredSpeed() is only used to modify the target desired speed when the user requests a speed adjustment via the pushbutton switches. Another feature of Example2 is the addition ***Fan Stall/Rotor Lock*** and ***UDB Speed Regulation Failure*** alerts.

This project uses the following Fan Controller APIs for alert signal handling:

FanController_GetAlertSource()
FanController_GetFanStallSpeedStatus()
FanController_GetFanStallStatus()

Alerts are enabled via checkboxes on the ***Fan Controller*** component customizer shown below. To configure the ***Fan Controller*** component double-click on the ***Fan Controller*** component in the Top Level schematic for Example2. (See **Figure 4-19**)

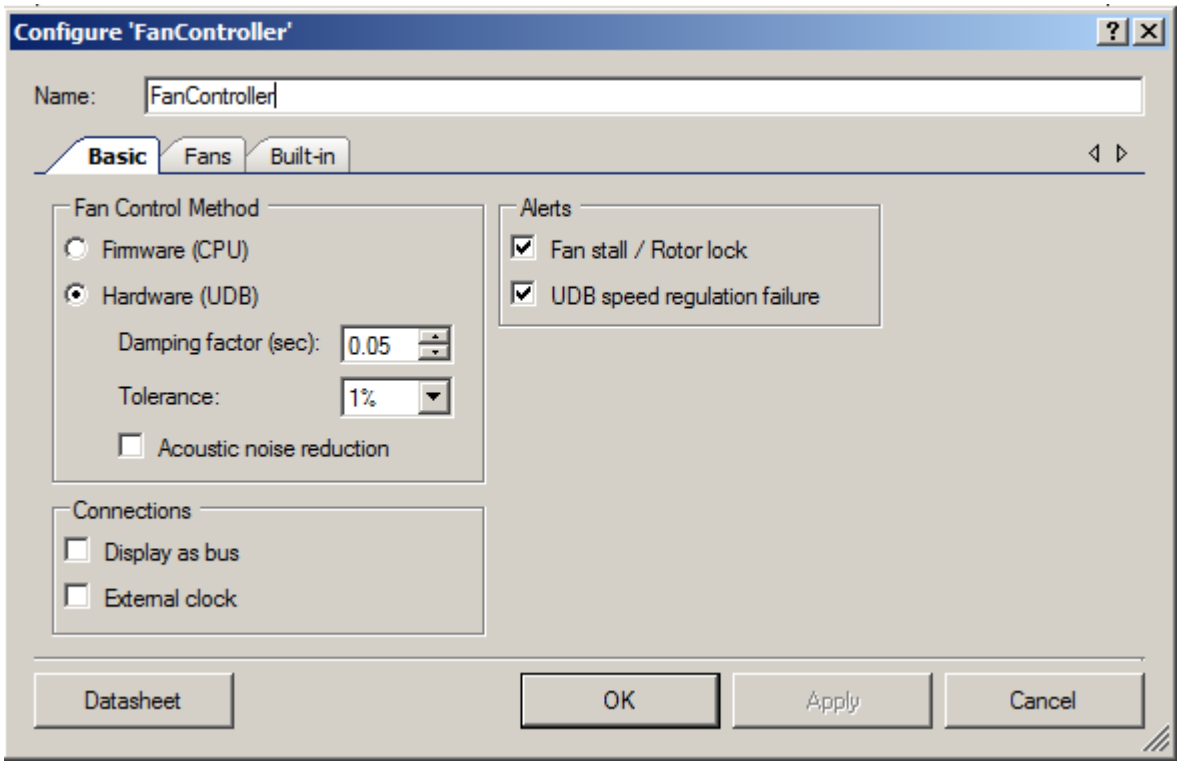

Figure 4-19: Example2 Fan Controller Customizer – Basic Tab

Once either of the Alerts has been enabled, the ***Fan Controller*** will assert the ***Alert*** pin (high) when the enabled condition occurs (and for as long as it persists) on any of the fans. In this example, the ***Alert*** pin has been tied to a standard PSoC Creator ***Interrupt*** component. The ***Interrupt*** component allows the user to insert custom code to handle the interrupt. The custom handler for the ***Alert*** interrupt can be found in the file ***AlertInt.c*** and is shown below:

```
CY_ISR(AlertInt_Interrupt)
{
   /* Place your Interrupt code here. */
   /*`#START AlertInt_Interrupt`      */

    uint8 alertStatus;

    /* Determine alert source: stall or speed regulation failure */
    /*(could be both) */
    alertStatus = FanController_GetAlertSource();
```

```
    /* If stall alert, determine which fan(s) */
    if (alertStatus & FanController_STALL_ALERT)
        stallStatus = FanController_GetFanStallStatus();

    /* If speed regulation failure alert, determine which fan(s) */
    if (alertStatus & FanController_SPEED_ALERT)
        speedStatus = FanController_GetFanSpeedStatus();

    /* `#END` */
}
```

The interrupt handler first calls FanController_GetAlertSource() to determine the alert/fault type (stall or speed failure). It then calls FanController_GetFanStallSpeedStatus() or FanController_GetFanStallStatus() to determine which fan(s) caused the alert. Note that FanController_GetFanStallSpeedStatus() and FanController_GetFanStallStatus() both clear the alert pin when called. The interrupt handler then sets bits in the stallStatus and speedStatus global variables. The main code loop polls these global variables to update the LCD display with the fan status. Note that the ***Alert*** signal in this project is also routed to a general purpose IO (GPIO) P0.0 so that it can be observed on a scope or logic analyzer.

■ Firmware Flowchart

The firmware flowchart for the Example2 project is shown below (see **Figure 4-20**). In this example project, the firmware only needs to maintain the user interface: handle switch presses and update the LCD. The ***Fan Controller*** component closed loop hardware control loop does the rest.

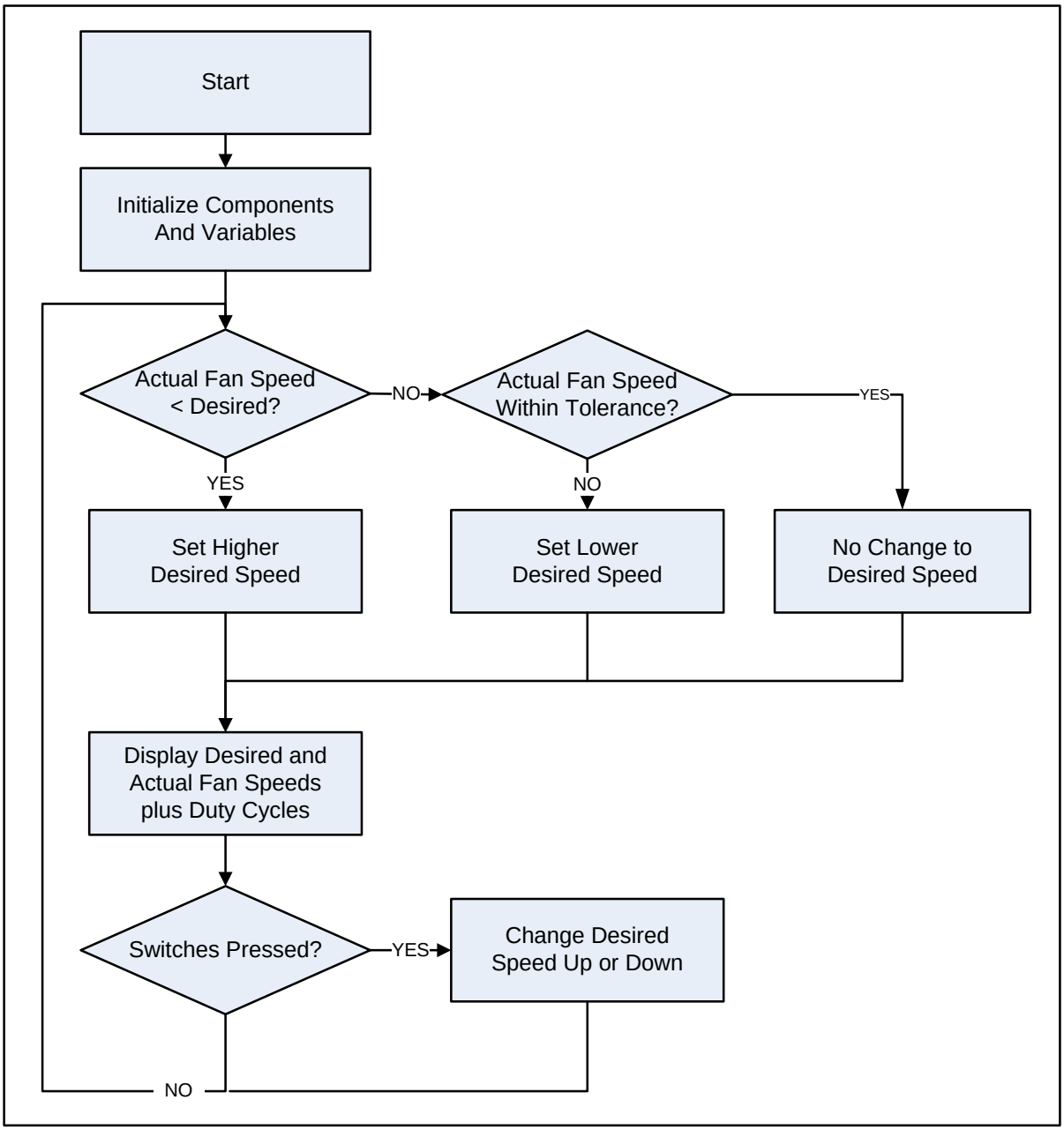

Figure 4-20: Example2 Firmware Flowchart

■ Example3: Thermal Management System

■ Overview

Example 3 demonstrates how the temperature sensors combined with the fans on the TME EBK can create a complete thermal management system. The example shows how to combine temperature readings from a number of temperature sensors in a variety of ways and use the composite temperature to set desired fan speeds according to a customizable transfer function.

The thermal management example project uses the concept of a "Thermal Zone". In this context, a thermal zone describes 2 things: 1) how to combine multiple temperature sensor readings together to form a composite "Zone Temperature" and 2) how to map the zone temperature to a fan speed. Therefore, by this definition, each fan will be controlled according to its own independent thermal zone. This example has two thermal zones since the TME EBK has only 2 fans installed. Algorithms currently implemented to combine multiple temperature sensors into a composite zone temperature include: 1) Straight average, 2) weighted average, 3) maximum.

In this example project, the weighted method is used on both fans. A zone temperature to fan speed transfer function is then definable for each zone. Transfer functions currently implemented include: 1) linear and 2) table driven. In this example project, the transfer function used is table driven on both fans. That is, a look-up table maps composite zone temperature to fan speed.

This example is a simulation of a thermal management system. The first zone, ***Zone 1***, combines temperature measurements from two temperature sensors (1 analog and 1 digital). The analog sensor is simulated using a variable potentiometer to allow easy demonstration of fan control over a wide simulated temperature range without the need of an environmental chamber to cycle through temperatures. In ***Zone 1***, the temperature sensors are combined using a weighted average where the potentiometer is given 90% weight and the digital I2C temp sensor (U1 on TME EBK) is given 10% weight. Adjust the potentiometer (R20 on the CY8CKIT-001 PSoC Development Kit and R56 on the CY8CKIT-030 PSoC 3 Development Kit) to vary the simulated temperature value in the approximate range of 15 to 100 degrees C. The ***Zone 1*** speed transfer function is table driven and follows the profile shown in **Figure 4-21**.

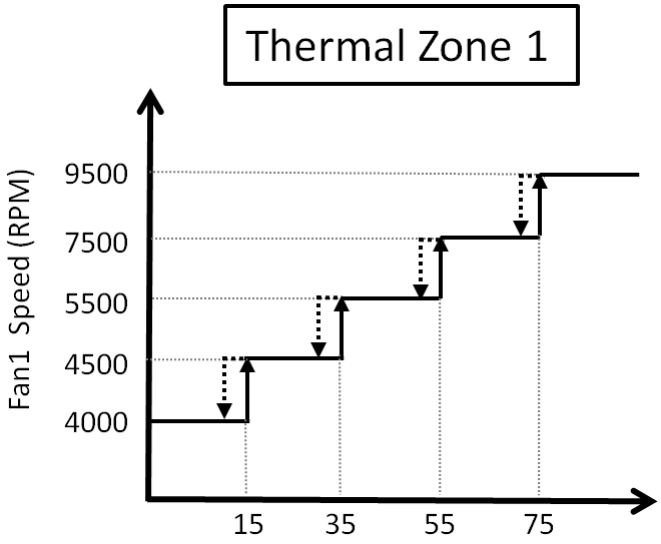

Figure 4-21: Example3 - Zone 1 Thermal Profile

Zone 2 consists of 2 temperature sensors and a single fan. The Zone 2 speed transfer function is table driven and is shown below in **Figure 4-22**. Note that the temperature range is very narrow and close to room temperature. This is to allow for simple testing at room by just touching a temperature sensor with a warm finger to cause a fan speed change. In Zone 2, the temperature sensors are combined using a weighted average where the digital I2C temperature sensor (U1 on TME EBK) is given approximately 99% of the weight. And the potentiometer is given 1% weight. In this example U1's temperature reading will dominate the overall zone temperature calculation.

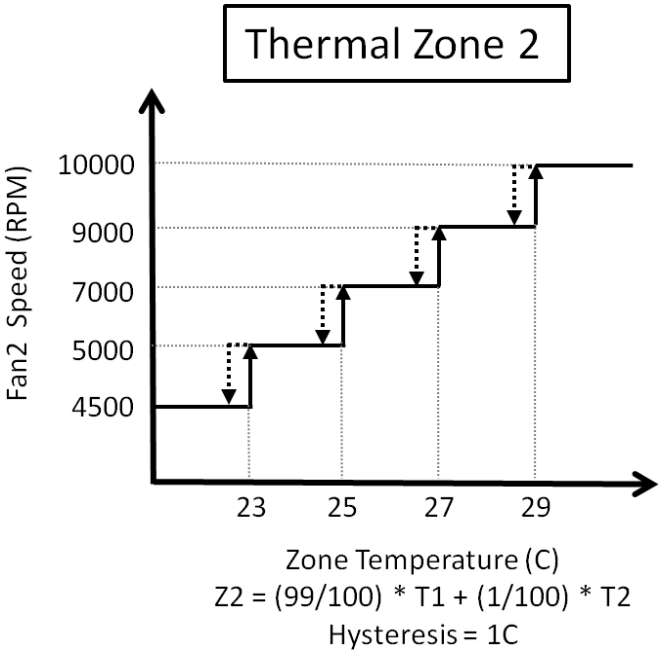

Figure 4-22: Example 3 - Zone 2 Thermal Profile

In this example, The LCD screen displays status information about thermal management system across three screens. The user can cycle through the status screens by pressing SW1 on the CY8CKIT-001 PSoC Development Kit or SW2 on the CY8CKIT-030 PSoC 3 Development Kit. The three screens are:

Screen 1 - Zone 1 Summary
This screen displays the current status of ***Zone 1***. Line 1 displays the zone number, the current composite zone temperature and the zone temperature calculation algorithm used. Line 2 displays the desired fan speed and the actual fan speed for ***Zone 1***.



Figure 4-23: Example3 – Zone 1 Summary

Screen 2 - Zone 2 Summary
This screen displays the current status of ***Zone 2***. Line 1 displays the zone number, the current composite zone temperature and the zone temperature calculation algorithm used. Line 2 displays the desired fan speed and the actual fan speed for ***Zone 2***.

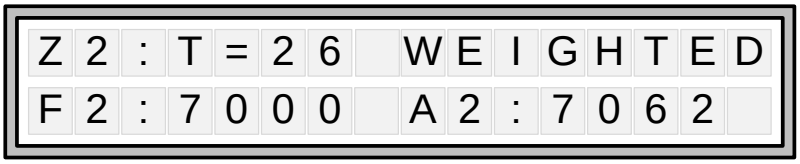

Figure 4-24: Example3 – Zone 2 Summary

Screen 3 - Temperature Sensors Summary
This screen displays the current temperature sensor readings for all sensors in the system.
Line 1 displays the ***Zone 1*** temperature sensor values. The left most temperature is the zone's composite temperature followed by the temperatures of each contributing sensor. Line 2 displays the same information for ***Zone 2***.

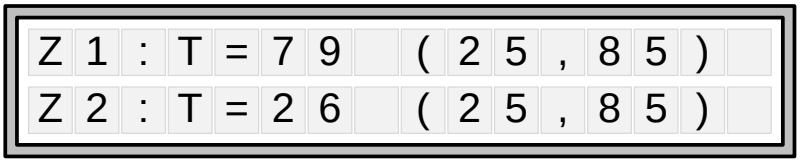

Figure 4-25: Example3 – Temperature Sensors Summary

■ Technical Details

The thermal management system example consists of two parts: 1) the main application and 2) the thermal manager. The main application is responsible for the user interface and for periodically calling the thermal manager. The application implementation can be found in ***main.c*** and on the ***Test Application*** tab of the project's schematic. The thermal manager implementation can be found in ***ThermalManager.c*** and on the ***Thermal Manager*** tab of the project's schematic.

The main application only needs to call ThermalManager_Start() to initialize the Thermal Manager and then it must periodically call ServiceThermalManager() to run temperature and speed updates. In this example, this is done every 500ms but can be changed by modifying ***#define THERMAL_UPDATE_MS_RATE*** in ***main.c***.

All the parameters that define the zone composite temperature sensor algorithm and the zone temperature to fan speed algorithm are defined at the top of ThermalManager.c. To modify these settings, refer to ThermalManager.h for the relevant keywords.

■ Firmware Flowchart

The following flowchart shows the basic function of the Thermal Manager along with the APIs in ThermalManager.c that implement the main service loop:

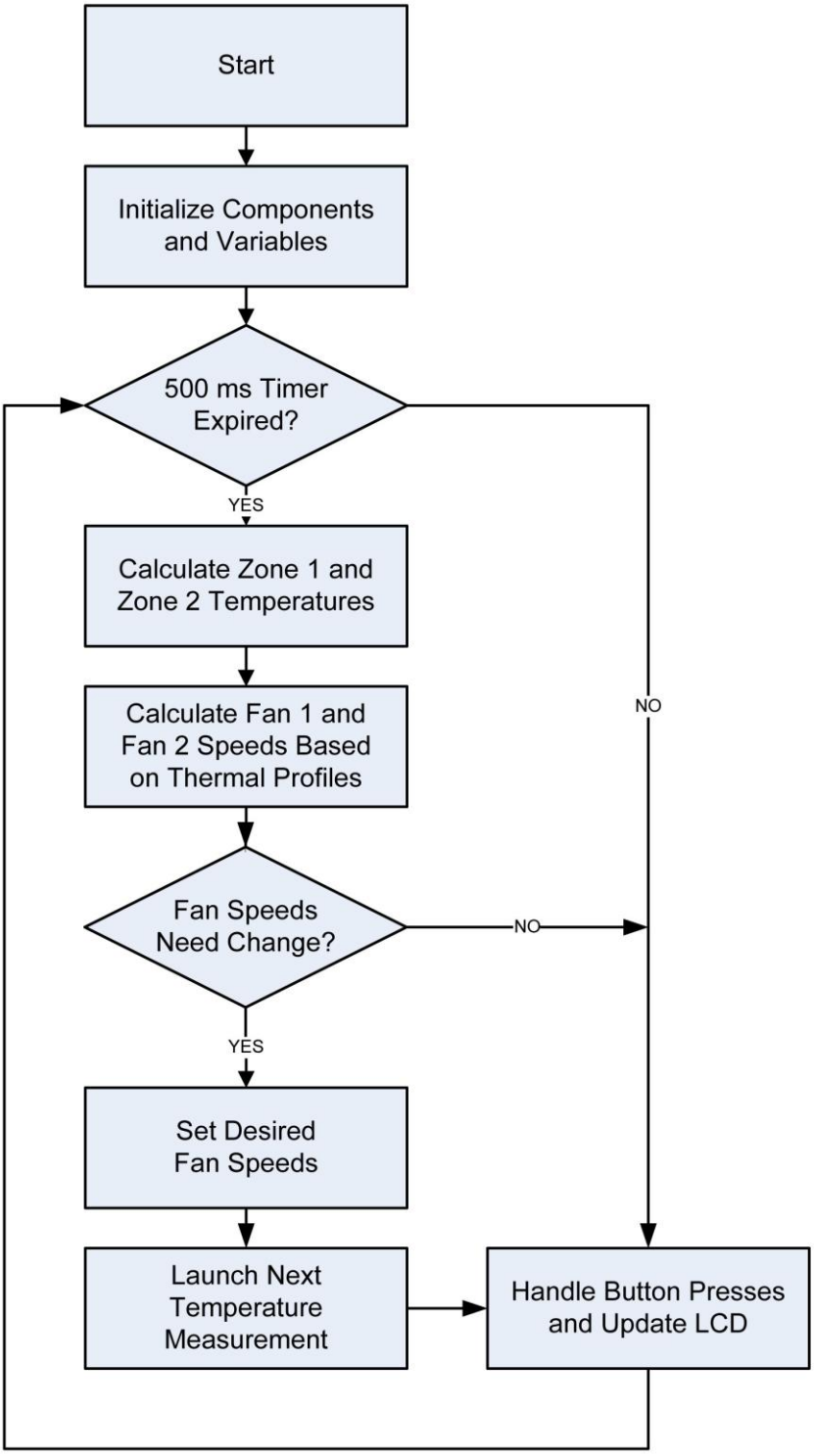

Figure 4-26: Thermal Manager Flowchart

Chapter 5

TME Schematics

5.1 Power Supply

Power

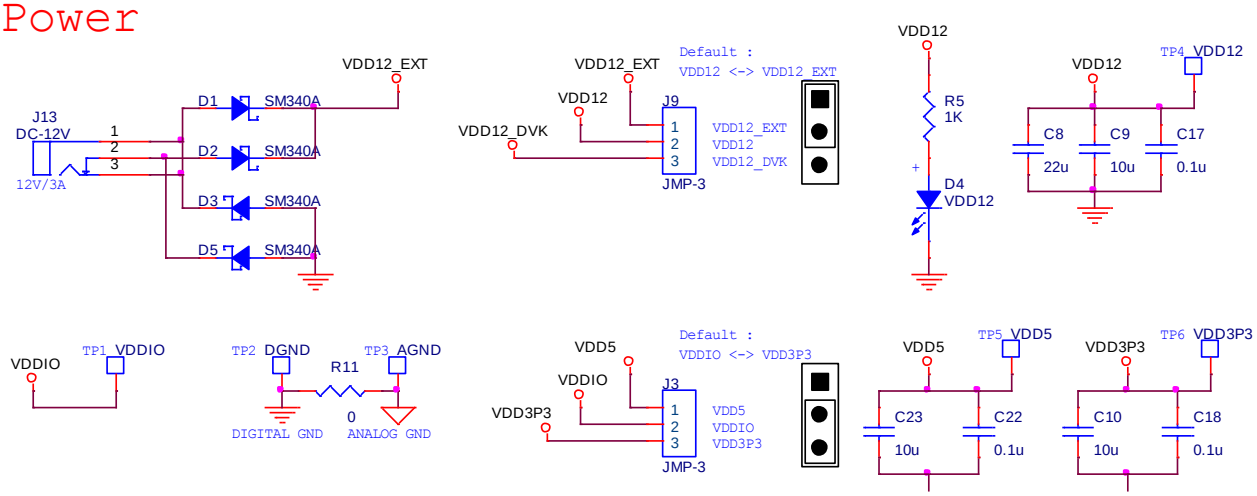

5.2 4-Wire Fan Sockets

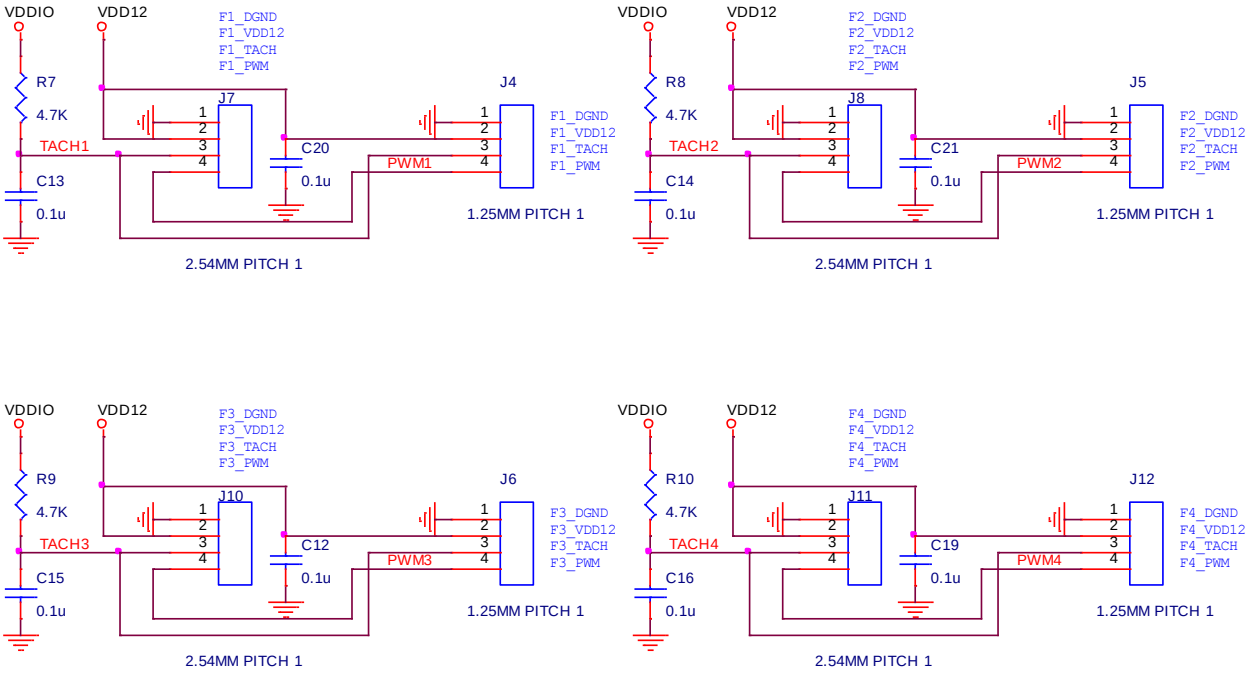

5.3 I2C/SMBus/PMBus Port

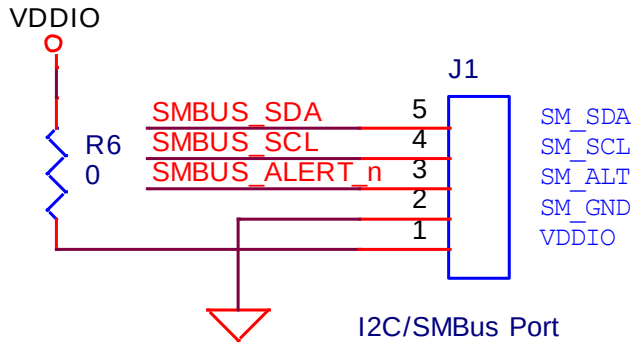

5.4 2x20 Pin DVK Connector and Test Points

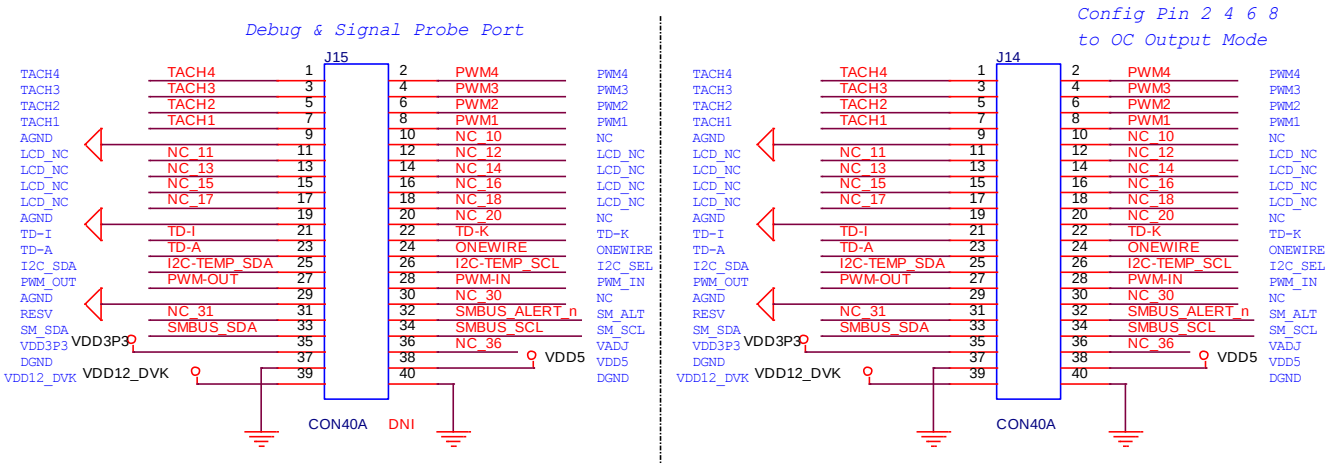

5.5 1-Wire Temperature Sensor

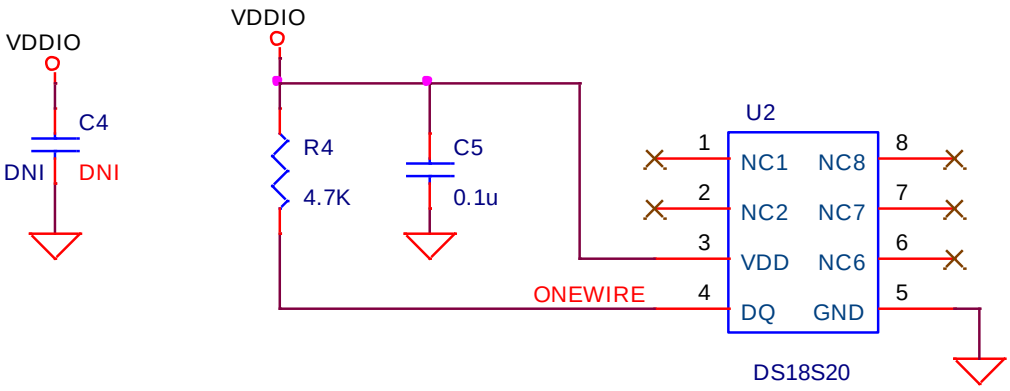

5.6 Temperature Diodes

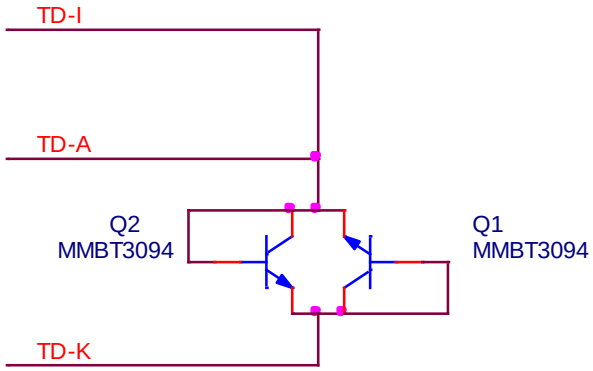

5.7 I2C Temperature Sensor

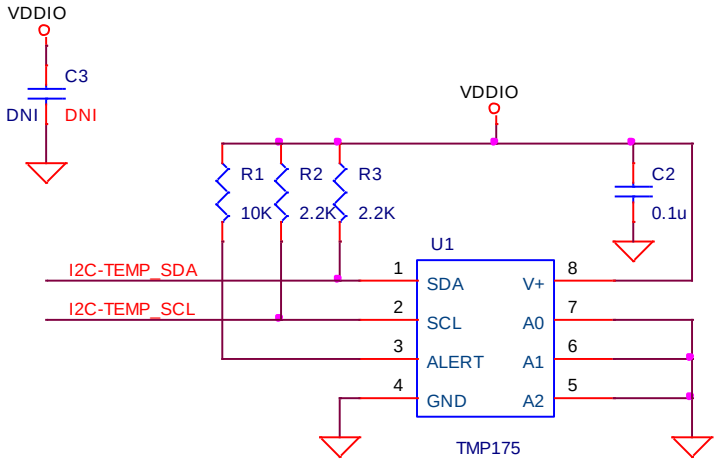

5.8 PWM Temperature Sensors

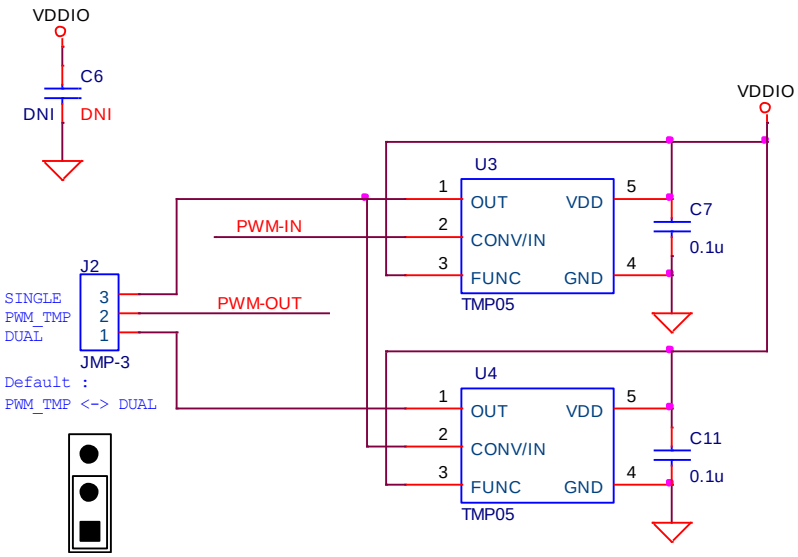

5.9 Layout

5.10 Top layer

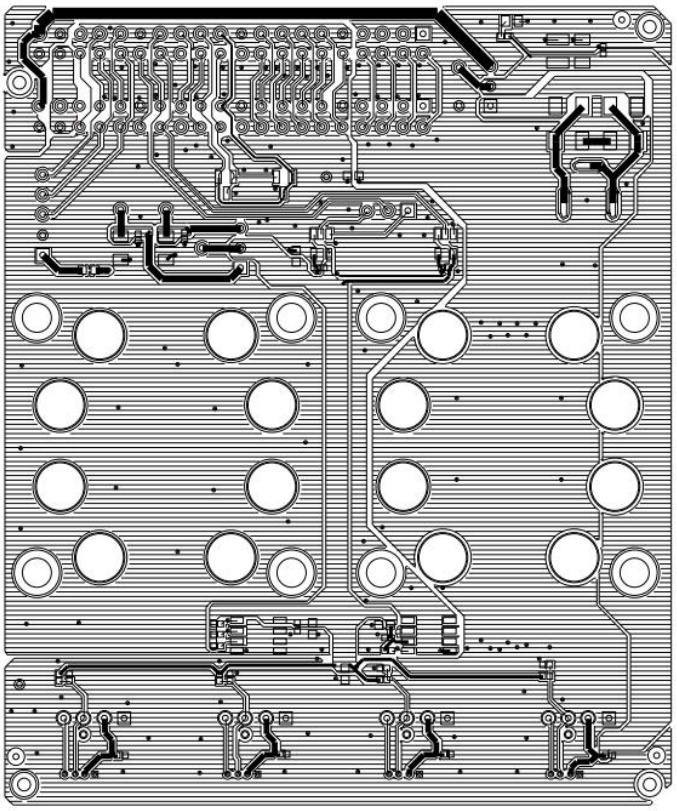

5.11 Bottom layer

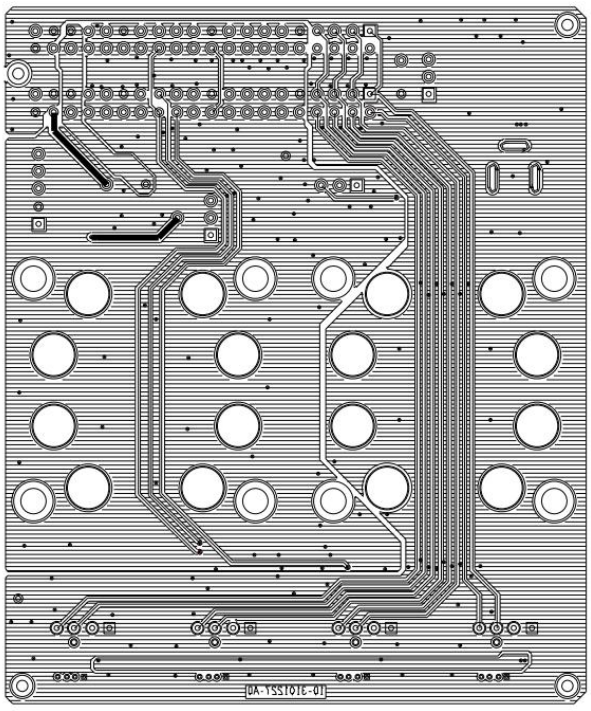

5.12 Top Silkscreen

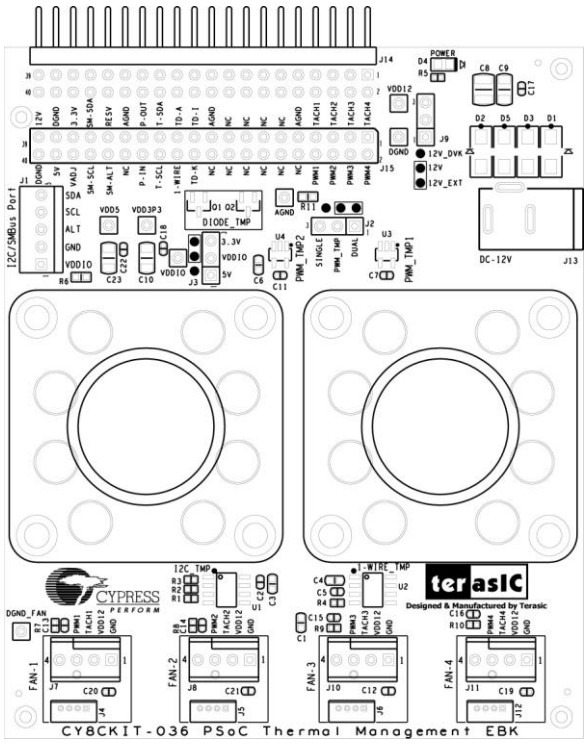

5.13 Bill of Materials

Item	Description	Designator	Qty	Value	Manufacturer	Manufacturer Part#
1	Ceramic Capacitor, 0.1uF, +/-10%, 25V, X5R(0402)	C2,C5,C7, C11,C12,C13, C14,C15, C16,C17,C18, C19,C20, C21,C22	15	0.1uF	Taiyo Yuden	TMK105BJ104KV-F
2	22uF, +/-10%, 25V, X5R(1210)	C8	1	22uF	MURATA	GRM32ER61E226KE15L
3	10uF, +/-10%, 25V, X5R(1206)	C9,C10,C23	3	10uF	MURATA	GRM31CR61E106KA12
4	Schottky Rectifier 40V/3A(SM340A)	D1,D2,D3,D5	4	SM340A	GW	SM340A
5	Light Emitting Diode (Yellow)	D4	1	VDD12	LITEON	LTST-C170KSKT
6	ONN HEADER 5POS .100 VERT TIN	J1	1	I2C/SM Bus Port	MOLEX	22-05-3051
7	1X3 .100"CENTER HEADER	J2,J3,J9	3	JMP-3	SAMTEC	TSW-103-07-G-S
8	FAN socket, 1.25mm Wafer 180°	J4,J5,J6,J12	4	1.25MM PITCH 1	CHERNG WEEI	CCX-W125-04-DIP
9	FAN socket, 2.54mm Wire-to-Board Header, DIP 180° Type	J7,J8,J10,J11	4	2.54MM PITCH 1	CHERNG WEEI	CD-W254-(3.4)
10	DC Power Socket	J13	1	DC-12V	CHERNG WEEI	32753PA
11	Pin Header, 2X20, Pitch 2.54MM, male, Right Angel	J14	1	CON40A	NA	NA
12	NPN General Purpose Amplifier	Q1,Q2	2	MMBT3094	Fairchild	MMBT3094
13	10K ohm, +/-1%, 1/16W(0402)	R1	1	10K	YAGEO	RC0402FR-0710KL
14	2.2K ohm, +/-1%, 1/16W(0402)_	R2,R3	2	2.2K	YAGEO	RC0402FR-072K2L
15	4.7K ohm, +/-1%, 1/16W(0402)	R4,R7,R8,R9, R10	5	4.7K	YAGEO	RC0402FR-074K7L

16	1K ohm, +/-0.1%, 1/16W(0402)_	R5	1	1K	SAMSUNG	RG1005P-102-B-T5
17	0 ohm, Jumper, 1/10W(0603)_	R6,R11	2	0 ohm	WALSIN	WR06X000 PTL
18	Digital Temperature Sensor with Two-Wire Interface	U1	1	TMP175	Texas Instruments	TMP175AID
19	High-Precision 1-Wire Digital Thermometer	U2	1	DS18S20	MAXIM	DS18S20Z
20	±0.5°C Accurate PWM Temperature Sensor	U3,U4	2	TMP05	ADI	TMP05AKS-500RL7
21	BUMPER CLEAR.370X.19 " CYLINDER	MH1,MH2, MH3,MH4	4	screw holes	Richco Plastic Co	RBS-35
22	Mini Jumper 2.54 Pitch Open Type(13.5)		3		CHERNG WEEI	CMJ-135BB
23	M3 35mm, Nickel Plated, Round Head		8		NA	NA
24	M3 Nickel Plated Hexagonal Nut		8		NA	NA
25	DC Brushless axial flow fan, 40x40mm, 4-wire, 12V		2		AVC	DB04028B12UP014

Chapter 6

Appendix

6.1 Revision History

Version	*Change Log*
V1.0	Initial Release
V2.1	Example projects updated for PSoC Creator v2.1 and new Components

6.2 Copyright Statement

Copyright © 2012 Terasic Technologies Inc. All rights reserved.