CY5674 PRoC™ BLE SMA MODULE

CY5674 PRoC™ BLE SMA Module is a complete solution to add BLE connectivity to any embedded system. The module features a PRoC BLE device (CYBL10563), two crystals, a SMA connector, and other passives while providing access to all GPIOs of the device.

Visit www.cypress.com/BLE for more information on Cypress's BLE solutions.

PRoC BLE is a single-chip solution with a 48-MHz ARM® Cortex®-M0 CPU, BLE radio, CapSense® technology for touch sensing, 2 Serial Communication Blocks, 12-bit ADC, 4 Timer/Counter/PWMs, 4 additional PWMs, I²S and LCD.

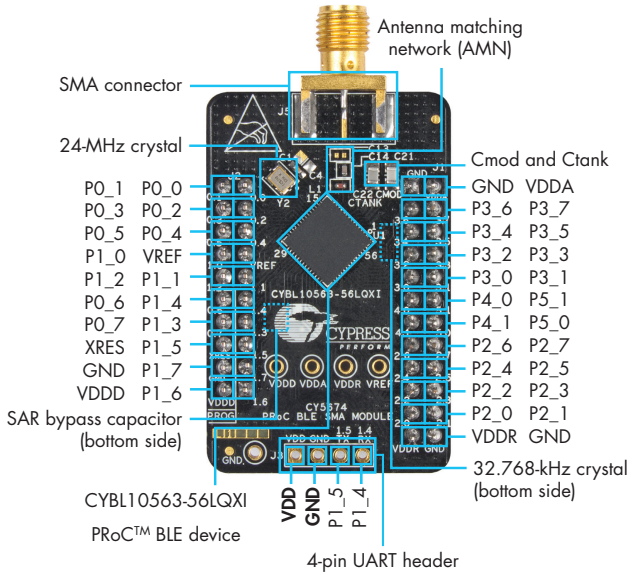

Fig-1: Feature List and Pinout Description for PRoC BLE SMA Module

Note: To apply power to the module, use the VDD pin (1.9 V - 5.0 V) and GND pin.

CY5674 PRoC™ BLE SMA MODULE

STANDALONE USE WITH PSoC CREATOR™ IDE AND CY8CKIT-002 MINIPROG3



Pin Mapping	
CY8CKIT-002	CY5674
VTARG	VDD
GND	GND
RES	XRES
SCLK	P0_7
SDAT	P0_6

Fig-2: Programming and Debugging with CY8CKIT-002

USING THE PRoC BLE SMA MODULE WITH THE CY8CKIT-042-BLE PIONEER KIT

Step 1: Plug the module on the CY8CKIT-042-BLE Pioneer Kit baseboard.

Step 2: Create your design in PSoC Creator IDE and use the BLE Pioneer Kit to program and debug.

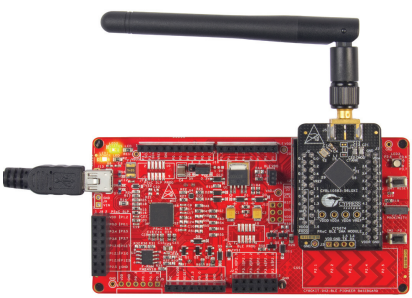

Fig-3: Programming and Debugging with CY8CKIT-042 BLE Pioneer Baseboard

Additional regulatory certification will be required to integrate the module into an end product. Contact support@cypress.com for details.

For more information about this kit, visit www.cypress.com/CY5674

© 2015 Cypress Semiconductor Corporation. All rights reserved.
All trademarks or registered trademarks referenced herein are the properties of their respective owners. 001-96031 Rev.*A