CY5670 CYSMART™ USB DONGLE

CY5670 CySmart USB dongle (BLE dongle) is a BLE-to-USB bridge that uses Cypress's PRoC™ BLE (CYBL10162-56LQXI) and PSoC® 5LP (CY8C5868LTI-LP039) devices. The dongle can be used with Cypress's CySmart™ Windows® tool to test and debug BLE devices. Visit www.cypress.com/BLE for more information on Cypress's BLE solutions.

PRoC BLE is a single-chip solution with a 48-MHz ARM® Cortex®-M0 CPU, BLE radio, CapSense® technology for touch sensing, two serial communication blocks (SCBs), a 12-bit ADC, four Timer/Counter/PWMs, four additional PWMs, I²S for digital audio, and segment LCD direct-drive capability.

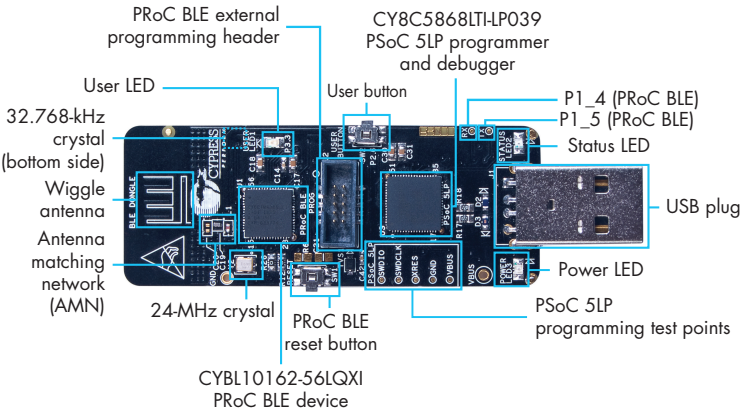

Fig-1: Pinout Description for CySmart USB Dongle

CY5670 CYSMART™ USB DONGLE

Step 1: Plug the CySmart USB Dongle into a Windows PC.

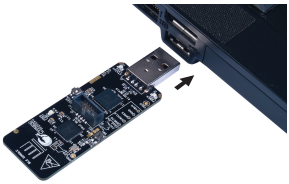

Fig-2: Powering the CySmart USB Dongle

Step 2: Test and debug BLE devices using CySmart.

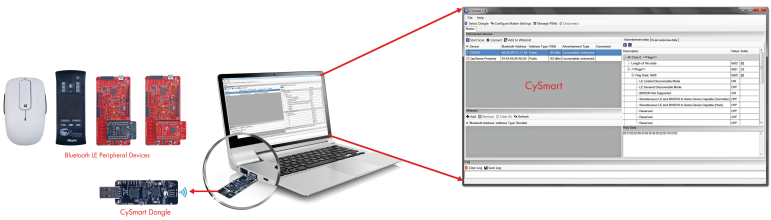

Fig-3: CySmart Windows

The CySmart USB Dongle is factory-programmed to work as a BLE GAP Central device, allowing you to debug BLE applications such as those implemented using the CY8CKIT-042 BLE Pioneer Kit.

Detailed instructions for using the dongle with the CySmart tool are available as a part of the CySmart User guide. Visit www.cypress.com/CySmart

For details on how to use this dongle with other Cypress BLE kits, visit its webpage at www.cypress.com/CY5670

Refer to the kit user guides on the website for detailed information.

CY5670 has been pre-compliance tested against regulatory standards for countries including USA (FCC), Canada (IC) and Japan (JRF/TELEC).

For more information about this kit, visit www.cypress.com/CY5670

© 2015 - 2017 Cypress Semiconductor Corporation. All rights reserved.
All trademarks or registered trademarks referenced herein are the properties of their respective owners. 001-96029 Rev.*E