CY3270

PSoC® 1 FirstTouch™ Kit Guide

Document No. 001-15945 Rev. *D

Cypress Semiconductor
198 Champion Court
San Jose, CA 95134-1709
Phone (USA): 800.858.1810
Phone (Intnl): 408.943.2600
http://www.cypress.com

Copyrights

© Cypress Semiconductor Corporation, 2007-2011. The information contained herein is subject to change without notice. Cypress Semiconductor Corporation assumes no responsibility for the use of any circuitry other than circuitry embodied in a Cypress product. Nor does it convey or imply any license under patent or other rights. Cypress products are not warranted nor intended to be used for medical, life support, life saving, critical control or safety applications, unless pursuant to an express written agreement with Cypress. Furthermore, Cypress does not authorize its products for use as critical components in life-support systems where a malfunction or failure may reasonably be expected to result in significant injury to the user. The inclusion of Cypress products in life-support systems application implies that the manufacturer assumes all risk of such use and in doing so indemnifies Cypress against all charges.

PSoC Designer™ and Programmable System-on-Chip™ are trademarks and PSoC® is a registered trademark of Cypress Semiconductor Corp. I²C is a registered trademark of Philips Electronics. All other trademarks or registered trademarks referenced herein are property of the respective corporations.

Any Source Code (software and/or firmware) is owned by Cypress Semiconductor Corporation (Cypress) and is protected by and subject to worldwide patent protection (United States and foreign), United States copyright laws and international treaty provisions. Cypress hereby grants to licensee a personal, non-exclusive, non-transferable license to copy, use, modify, create derivative works of and compile the Cypress Source Code and derivative works for the sole purpose of creating custom software and or firmware in support of licensee product to be used only in conjunction with a Cypress integrated circuit as specified in the applicable agreement. Any reproduction, modification, translation, compilation or representation of this Source Code except as specified above is prohibited without the express written permission of Cypress.

Disclaimer

CYPRESS MAKES NO WARRANTY OF ANY KIND, EXPRESS OR IMPLIED, WITH REGARD TO THIS MATERIAL, INCLUDING, BUT NOT LIMITED TO, THE IMPLIED WARRANTIES OF MERCHANTABILITY AND FITNESS FOR A PARTICULAR PURPOSE. Cypress reserves the right to make changes without further notice to the materials described herein. Cypress does not assume any liability arising out of the application or use of any product or circuit described herein. Cypress does not authorize its products for use as critical components in life-support systems where a malfunction or failure may reasonably be expected to result in significant injury to the user. The inclusion of Cypress' product in a life-support systems application implies that the manufacturer assumes all risk of such use and in doing so indemnifies Cypress against all charges.

Use may be limited by and subject to the applicable Cypress software license agreement.

Contents

1. Introduction **5**

1.1 Kit Contents 6
1.2 Additional Learning Resources 6
1.2.1 Reference Documents 6
1.3 Document History 7
1.4 Document Conventions 7

2. Getting Started **9**

2.1 Introduction 9
2.2 CD Installation 9
2.3 PSoC Designer 14
2.4 PSoC Programmer 15
2.5 Install Hardware 15
2.6 Run CapSense Touch Sensing Design 16

3. Kit Operation **17**

3.1 Introduction 17
3.1.1 MultiFunction Expansion Card (FTMF) 17
3.2 FTMF Expansion Card Demonstrations 17
3.2.1 CapSense Touch Sensing Demonstration (Default) 18
3.2.2 Temperature Sensing Demonstration 18
3.2.3 Light Sensing Demonstration 18
3.2.4 CapSense Proximity Sensing Demonstration 18

4. Hardware **19**

4.1 System Block Diagram 19
4.2 FTPC Bridge (First Touch PC Bridge) 20
4.2.1 LED Usage 21
4.3 Expansion Card Overview 23
4.4 Expansion Card Details 23
4.4.1 FirstTouch MultiFunction Expansion (FTMF) Card 23

5. Code Examples **29**

5.1 My First Code Example 29
5.1.1 Project Objective 29
5.1.2 Flowchart 30
5.1.3 Creating My First PSoC 1 Project 31
5.2 MultiFunction Expansion Card Light Sensor 51
5.2.1 Device Configuration 52
5.2.2 Firmware Architecture 53
5.3 MultiFunction Expansion Card Proximity Sensor 54
5.3.1 Device Configuration 55

5.3.2 Firmware Architecture 56
5.4 Multifunction Expansion Card Temperature Sensor 57
5.4.1 Device Configuration 58
5.4.2 Firmware Architecture 59

A. Appendix **61**

A.1 Schematic 61
A.1.1 First Touch PC Bridge Schematic 61
A.1.2 First Touch Multifunction Card Schematic 62
A.2 Board Layout 63
A.2.1 PDCR-9402 Primary side 63
A.2.2 PDCR-9402 Secondary Side 63
A.2.3 Assembly Drawing of First touch Multifunction Card (Primary side) 63
A.2.4 Assembly Drawing of First touch Multifunction Card (Secondary Side) 64
A.2.5 PDCR-9403 Primary Side 64
A.2.6 PDCR-9403 Secondary Side 64
A.2.7 Assembly Drawing for FirstTouch PC Bridge 65
A.3 BOM 66
A.3.1 FirstTouch Multifunction Board 66
A.3.2 FirstTouch PC Bridge 67

1. Introduction

Thank you for your interest in the CY3270 PSoC® 1 FirstTouch™ Kit (FTK). You can design your own projects with Cypress's easy-to-use Integrated Development Environment (IDE), PSoC Designer™, or by altering sample projects provided along with this kit. The CY3270 PSoC 1 FTK is described in the Help guides and examples projects that are available. The project “MF_CS_SLIDE” is programmed on the CY3270 PSoC 1 FTK as the default project for demonstration purposes. For more information on the default project, refer to Chapter 5.

The CY3270 PSoC 1 FTK includes a USB interface dongle, referred to as the FTPC bridge, and a multifunction expansion card, referred to as the FTMF Expansion Card. The FTMF Expansion Card demonstrates a variety of applications using ‘PSoC Powered Peripherals’. The FTMF Expansion Card connects to the bridge through the bridge’s built-in 8×2 pin expansion port. As the name implies, the FTPC bridge forms the connection between the FTMF Expansion Card and the various PC applications that control and communicate with the FTMF Expansion Card.

The FTPC bridge portion of the kit contains a programmed Cypress CY8C24894 PSoC that performs all of the USB and expansion card interface functions. The firmware that is run by this PSoC performs the following primary functions:

- Functions as a USB physical and logical interface
- Provides PSoC MiniProg emulation for in system serial programming (ISSP) of the expansion cards
- Provides communications with the PSoC programming utility
- Performs HID data channel communications
- Performs expansion card I^2C communications
- Performs expansion card SPI communications

There are no other active components inside of the FTPC bridge. All of these interfaces run on a single PSoC device. Future projects for the FirstTouch kit allow you to modify the FTPC firmware and try some USB Interface designs of your own.

The FirstTouch expansion card connects to the FTPC bridge through the bridge’s 8×2 pin expansion port. This expansion port provides all of the necessary signals to program the host PSoC on the expansion card. The expansion port also provides power, ground, and I^2C or SPI communications to and from the expansion card host PSoC and PC.

The FirstTouch expansion card has a dedicated host PSoC. Therefore, when it is programmed with your design, the expansion cards can operate either detached from the FTPC bridge in standalone mode or connected to your system hardware. It is necessary to provide power and ground for the expansion card to operate in either of these two arrangements.

There are four unused analog or digital GPIO pins on the FTPC port and four unused analog or digital GPIO pins on the expansion card. This allows you to create custom designs and connect the signals you want to the FTPC bridge or the FirstTouch expansion cards. These GPIO pins on the PSoC are not connected to the header by default; zero ohm resistors (R9-R12) must be placed to use these GPIOs.

Chapter 2 describes the installation and configuration of the CY3270 PSoC 1 FTK. Chapter 3 describes the kit operation. It explains the programming of a PSoC 1 device with the PSoC Programmer, and the usage of the kit with the help of an example project. Chapter 4 describes the hardware operation. Chapter 5 provides information about the firmware and example project.

The Appendix A section provides the schematics and BOM associated with the PSoC Designer 5.1. You can evaluate the included sample projects and then experiment with the included hardware and software to create your own designs.

1.1 Kit Contents

The CY3270 PSoC 1 FTK contains:

- FirstTouch PC bridge.
- FirstTouch multifunction card
- CY8C21434-24LTXI sample
- Single strand wire (for proximity)
- CY3270-FTK Kit CD
  - PSoC Designer installation file
  - PSoC Programmer installation file
  - Bridge control panel installation file (packaged along with PSoC Programmer)
  - Code examples
  - Hardware files
  - Kit guide
  - Quick start guide
  - Release notes

Inspect the contents of the kit. If any parts are missing, contact your nearest Cypress sales office for further assistance.

1.2 Additional Learning Resources

Visit www.cypress.com for additional learning resources in the form of data sheets, technical reference manual, and application notes.

1.2.1 Reference Documents

- *Application note - AN2216 - PSoC® 1 - Estimating PSoC Power Consumption*
  http://www.cypress.com/?rID=2913
- *PSoC CY8C21434 - Chip features and related documents*:
  http://www.cypress.com/?mpn=CY8C21434-24LQXI
- *PSoC CY8C27443- Chip features and related documents*:
  http://www.cypress.com/?mpn=CY8C27443-24SXI
- FIRST TOUCH MF_Board Schematic.pdf
  http://www.cypress.com/?docID=22557
- For more information regarding PSoC Designer functionality and releases:
  www.cypress.com/go/psocdesigner
- For more information regarding PSoC Programmer, supported hardware and COM layer:
  www.cypress.com/go/psocprogrammer
- For a list of PSoC Designer-related trainings, see http://www.cypress.com/?rID=40543

1.3 Document History

Revision	PDF Creation Date	Origin of Change	Description of Change
**	08/17/2007	SXF	New document
*A	02/08/2011	RKPM	Updated template.
*B	02/16/2011	GNKK	Formatted page layout in TOC.
*C	02/22/2011	RKPM	Updated link in CD Installation section. Removed reference to PSoC Express from Copyright information. Removed references to PSoC Designer version in Chapter 2.
*D	05/25/2011	RKPM	Changed document title to CY3270 PSoC® 1 FirstTouch™ Kit Guide. Code Examples chapter: Added 'My First Code Example' section; updated all flowcharts.

1.4 Document Conventions

Table 1-1. Document Conventions for Guides

Convention	Usage
Courier New	Displays file locations, User entered text, and source code: C:\ ...cd\icc\
Italics	Displays file names and reference documentation: Read about the sourcefile.hex file in the PSoC Designer User Guide.
[**Bracketed,Bold**]	Displays keyboard commands in procedures: [**Enter**] or **[Ctrl][C]**
File > Open	Represents menu paths: File > Open >New Project
Bold	Displays commands, menu paths, and icon names in procedures: Click the **File** icon and then click **Open**.
Times New Roman	Displays an equation: 2 + 2 = 4
Text in gray boxes	Describes cautions or uniwue functionality of the product.

2. Getting Started

2.1 Introduction

This chapter describes how to install and configure the CY3270 PSoC 1 FTK.

2.2 CD Installation

To install the CY3270 PSoC 1 FTK, follow these steps:

1. Insert the kit CD into the CD drive of your PC. The CD is designed to auto-run and the kit installer menu appears.
   Note You can also download the latest kit installer from http://www.cypress.com/go/CY3270-FTK. Three different types of installers are available for download.

- CY3270-FTK_ISO: This file (ISO image) is an archive file of the optical disc provided with the kit. You can use this to create an installer CD or extract information using WinRar or similar tools.
- CY3270-FTK_ Single Package: This executable file installs the contents of the kit CD, which includes PSoC Programmer, PSoC Designer, kit code examples, kit hardware files, and user documents.
- CY3270-FTK_Single Package (without prerequisites): This executable file installs only the kit contents, which includes kit code examples, hardware files, and user documents.

Download the kit installer ISO file and create an installer CD, or extract the ISO using WinRar and install the executables.

2. Click **Install CY3270-FTK** to start the installation as shown in Figure 2-1.

Figure 2-1. Kit Installer Menu



Note If auto-run does not execute, double-click *cyautorun.exe* file on the root directory of the CD as shown in Figure 2-2.

Figure 2-2. Root Directory of the CD

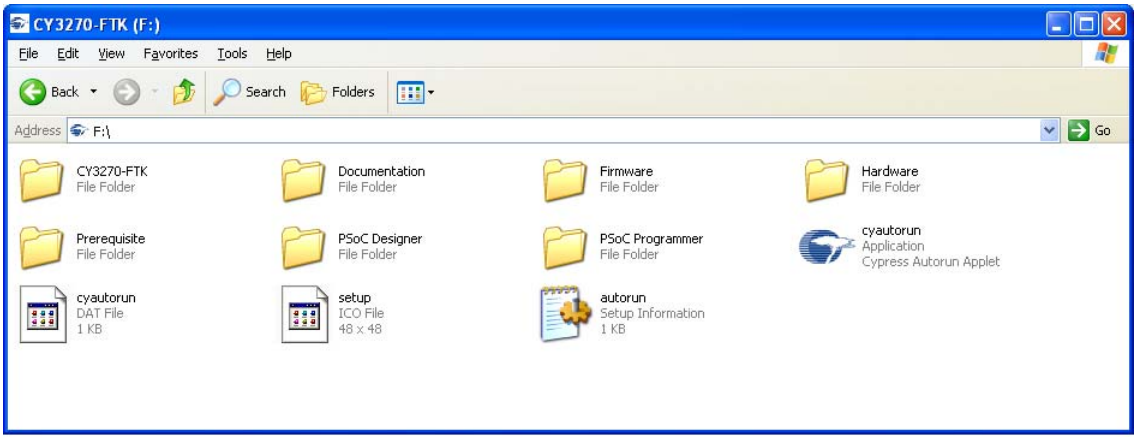

3. The **InstallShield Wizard** screen appears. On this screen, choose the folder location to install the setup files. You can change the location of the folder for the setup files using **Change** as shown in Figure 2-3.
4. Click **Next** to launch the kit installer.

Figure 2-3. InstallShield Wizard

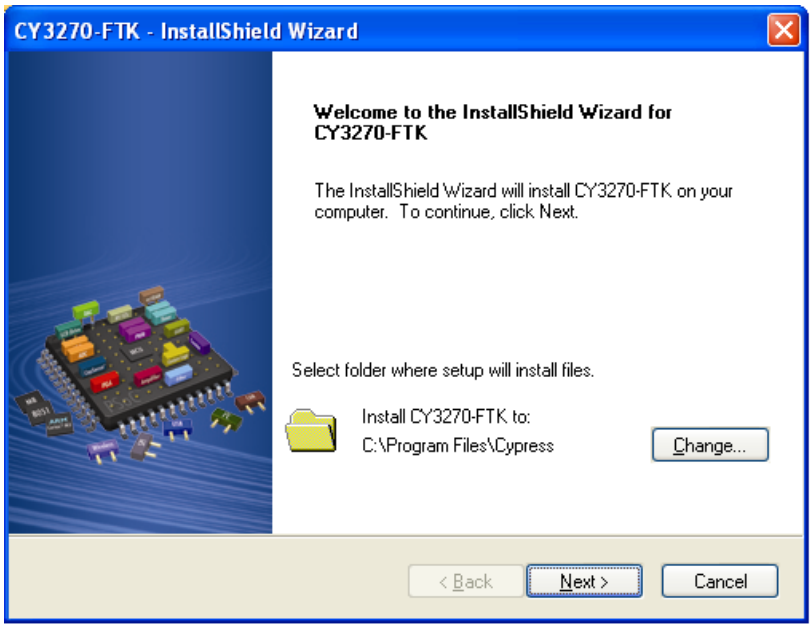

5. On the **Product Installation Overview** screen, select the installation type that best suits your requirement.

   The drop-down menu has three options - **Typical**, **Complete**, and **Custom**, as shown in Figure 2-4.

6. Click **Next** to start the installation.

Figure 2-4. Installation Type Options

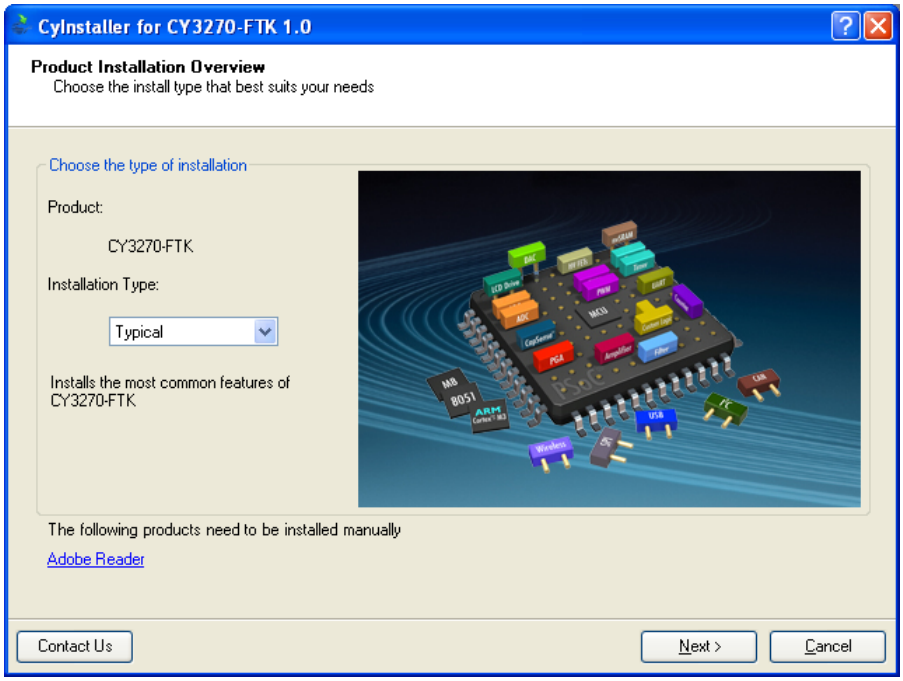

7. After the installation begins, a list of all packages appears on the **Installation Page**.

8. A green check mark appears next to each package as it is downloaded and installed (see Figure 2-5.
9. Wait until all the packages are downloaded and installed successfully.

Figure 2-5. Installation Page

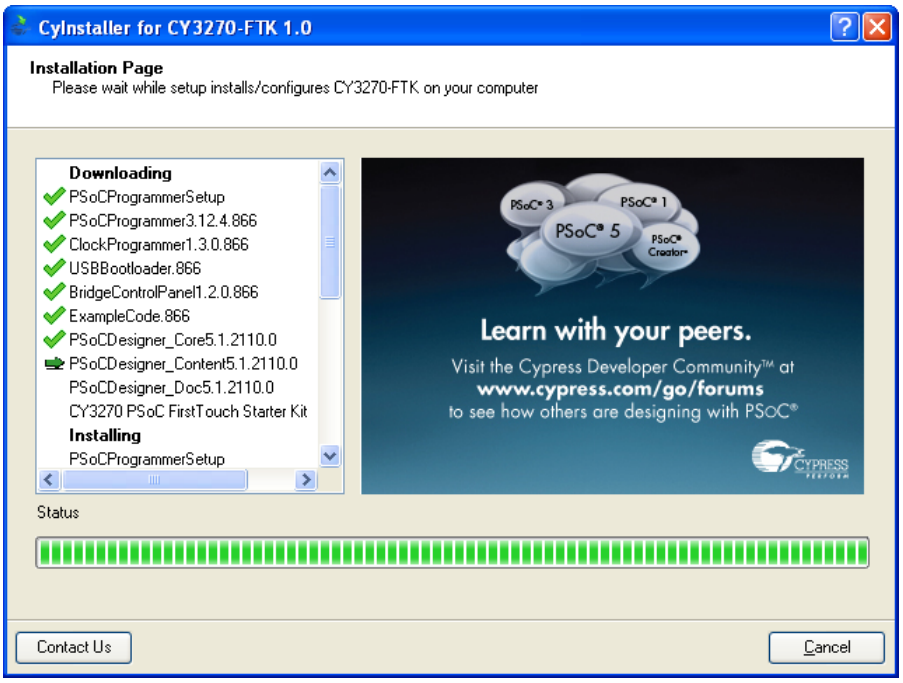

10. Click **Finish** to complete the installation of the kit installer as shown in Figure 2-6.

Figure 2-6. Installation Completion Page

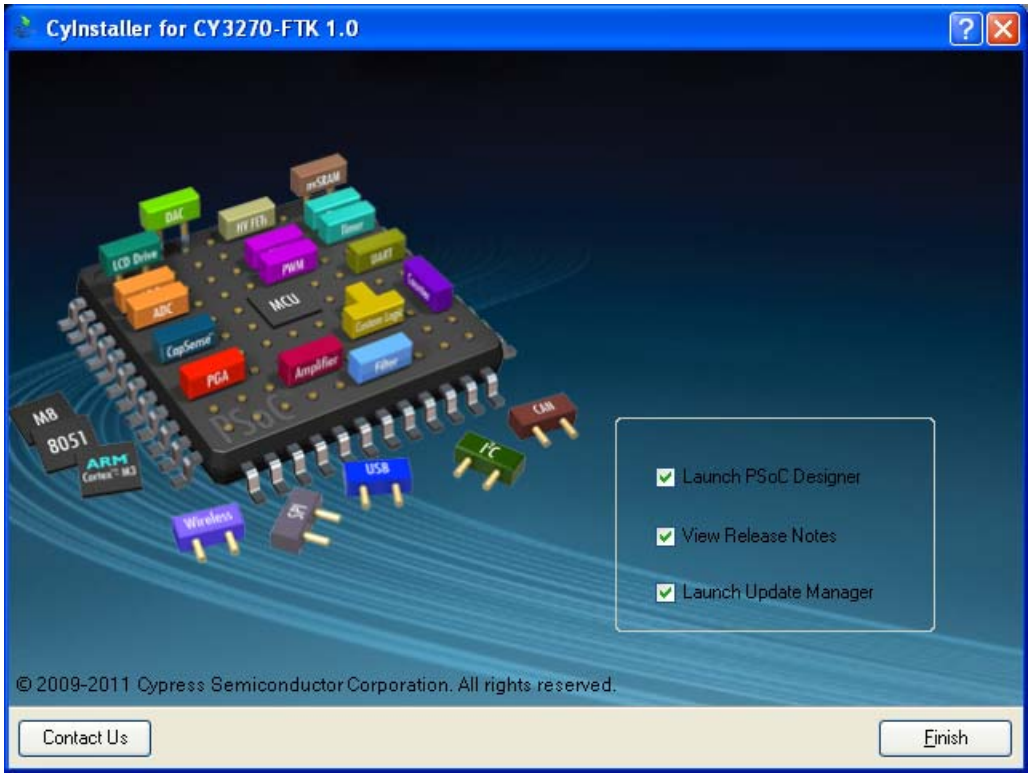

After installing the software, verify that you have all hardware and drivers setup for the CY3270 PSoC 1 FTK by connecting the kit to your PC through its USB interface. As this is the first time you connect the board to this PC, initial drivers get installed. Follow the on-screen dialogs for USB detection to complete the installation process. Verify your installation and setup by opening PSoC Programmer with the kit board attached.

Note Advanced users can skip to the Code Examples chapter.

2.3 PSoC Designer

1. Click **Start** > **All Programs** > **Cypress** > **PSoC Designer <version>** > **PSoC Designer <version>** (Figure 2-7)
2. Click **File** > **New Project** to create a new project on the PSoC Designer <version> menu or click **File** > **Open** to work with an existing project on the PSoC Designer <version> menu

Figure 2-7. PSoC Designer Interconnect View

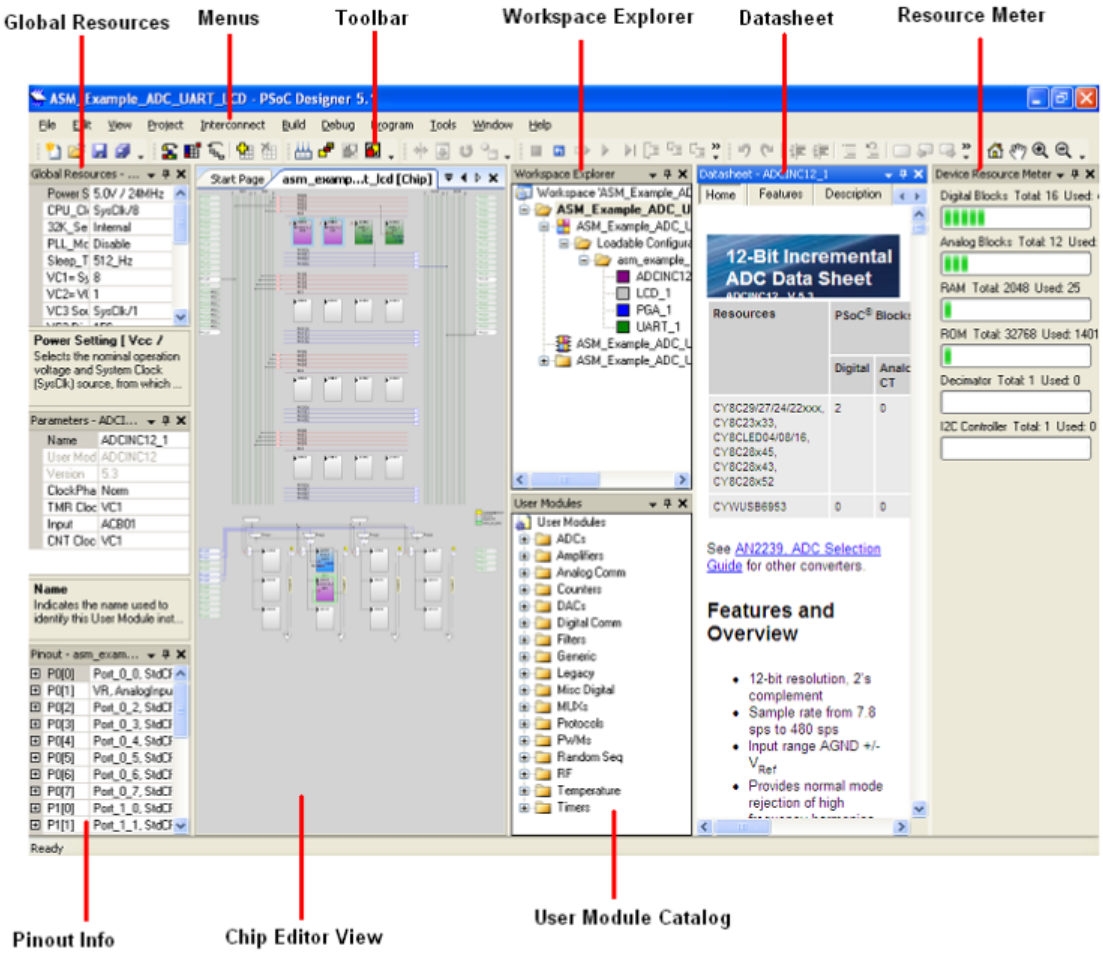

3. To experiment with the example projects, go to Chapter 5.

Note For more details on PSoC Designer go to the PSoC Designer IDE Guide at the following location:
<InstallDirectory>:\Program Files\Cypress\PSoC Designer\<version>\Documentation

See Additional Learning Resources on page 6 for links to PSoC Designer training. The PSoC Designer quick start guide is available at http://www.cypress.com/?rID=47954.

2.4 PSoC Programmer

1. Click **Start** > **All Programs** > **Cypress** > **PSoC Programmer <version>**> **PSoC Programmer <version>**
   (Figure 2-8).
2. Select the MiniProg from the port selection as shown in Figure 2-8.

Figure 2-8. PSoC Programmer Window

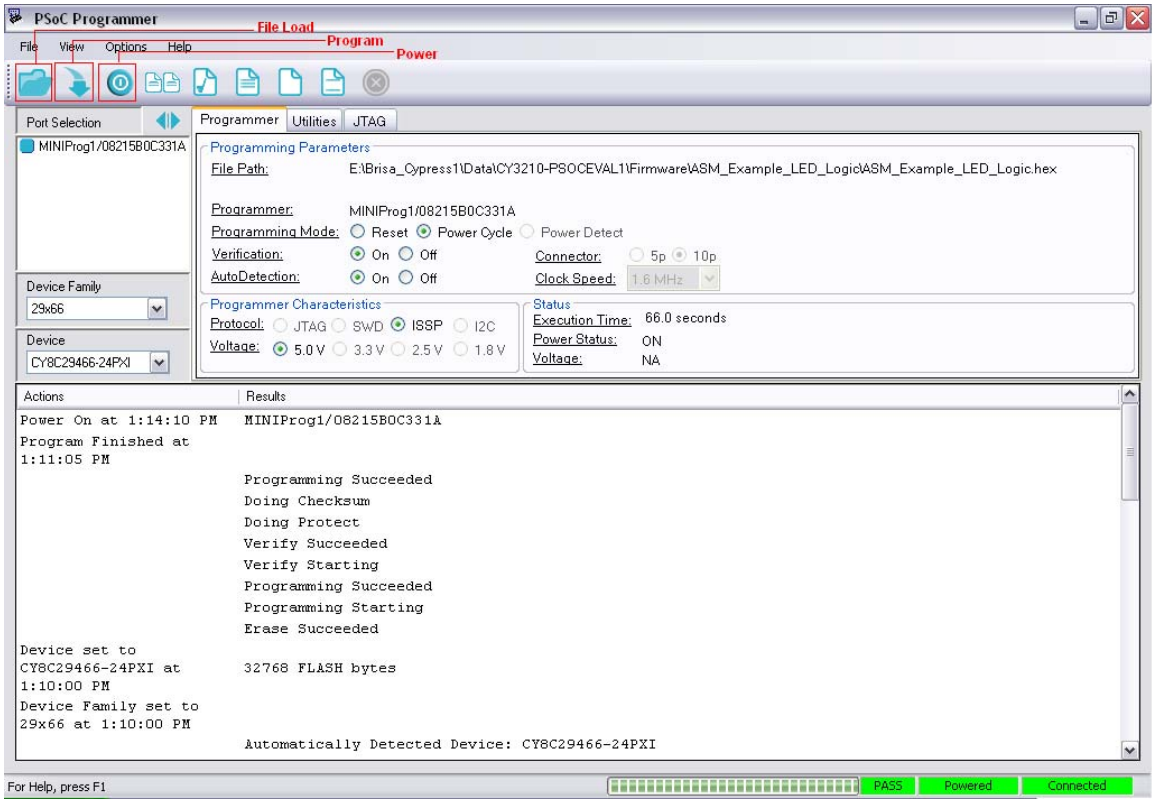

3. Click **File Load** to load the hex file.
4. Use the **Program** button to program the hex file on to the chip.
5. After programming is successful, **Programming Succeeded** appears in the **Action Pane**.
6. Close PSoC Programmer.

Note For more details on PSoC Programmer go to the Programmer user guide at:
`<InstallDirectory>:\Program Files\Cypress\Programmer\<version>\Documents.`

2.5 Install Hardware

Insert the PSoC FirstTouch Starter Kit (FTPC Bridge and FTMF Expansion Card connected) into your computer's USB port. In the 'Found New Hardware Wizard' window, select No, not this time. In the second 'Found New Hardware Wizard' window, select Install the software automatically. Alternatively, direct the New Hardware wizard to `\..\Program Files\Cypress\PSoC Programmer\drivers\` on your computer. If prompted with a 'Driver Verification' message, click Continue Anyway.

2.6 Run CapSense Touch Sensing Design

To install the kit hardware and run the CapSense touch sensing design, continue as follows:

1. Remove both end caps from the FTPC Bridge and then connect the FTMF Expansion Card into the header of the FTPC Bridge such that ‘Cypress Perform’ is visible on both boards. Insert the assembled kit in your computer’s USB port. Select **Cancel** in the ‘**Found New Hardware Wizard**’ window that appears.
2. Slide your finger along the CapSense touch sensing slider found on the furthest point away from your computer. Notice the LED variation based on the position of your finger on the slider. This is the CapSense touch sensing design working right out of the box.

3. Kit Operation

3.1 Introduction

The CY3270 PSoC 1 FTK examples help you develop applications using the PSoC 1 family of devices. The kit is designed to showcase how PSoC 1 can be used to easily develop temperature, CapSense, light, and proximity sensing applications.

3.1.1 MultiFunction Expansion Card (FTMF)

The FTMF card is connected to the PC bridge as shown in Figure 3-1.

Figure 3-1. FTMF Card connected to PC Bridge

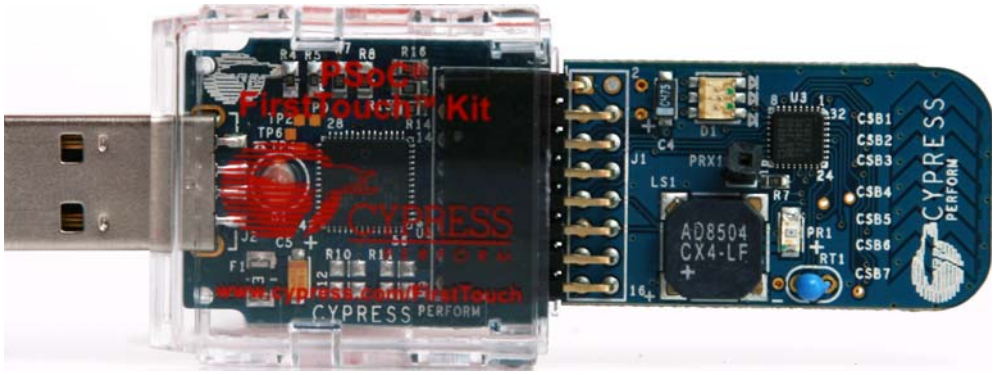

3.1.1.1 Programming FTMF

FTMF is programmed using the PC bridge and power is supplied through USB to the card. PSoC Programmer is used to program the *.hex* file on to the FTMF card.

3.2 FTMF Expansion Card Demonstrations

The FTMF expansion card provided in your kit is capable of supporting a variety of demonstrations. Each demonstration has an associated PSoC Designer project and a datasheet that describes the operation and usage of each of the demonstrations in detail. Since the FTMF expansion card has its own PSoC, you can remove it from the FTPC bridge and insert it into your target hardware or another development platform. To observe each of the various FTMF demonstrations, it is necessary to reprogram the FTMF card with the appropriate demonstration firmware. A short description of this follows. See Chapter 5 for more information.

Figure 3-2. FTMF Expansion Card

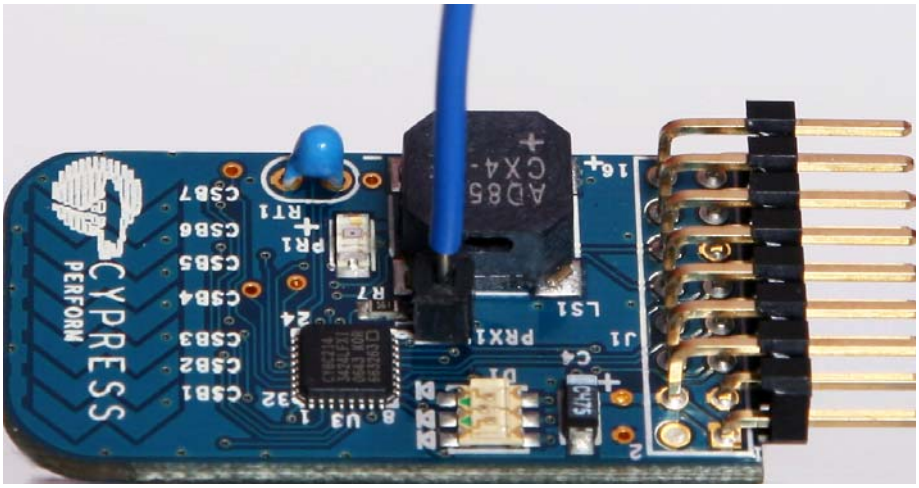

3.2.1 CapSense Touch Sensing Demonstration (Default)

The pre-programmed CapSense touch sensing demonstration shows how to use the CapSense touch sensing slider at the end of the board to control LED color. Run your finger across the CapSense touch sensing slider and notice how the color of the LED changes. The CY8C21434 PSoC that resides on the FTMF expansion card detects your finger's position on the CapSense touch sensing slider and controls the LED's output.

3.2.2 Temperature Sensing Demonstration

The temperature sensing demonstration shows how to use a temperature sensor to control LED color. Touch the temperature sensor and notice how the LED color changes. Removing your finger leads to the LED color slowly reverting back to its initial state. PSoC detects the temperature and controls the LED's output.

3.2.3 Light Sensing Demonstration

The light sensing demonstration shows how to use an ambient light sensor to control LED intensity. Cover the light sensor with the palm of your hand and notice how the intensity of the LED changes. Removing your palm leads to the LED intensity reverting back to its initial state. PSoC detects the ambient light and controls the LED's output.

3.2.4 CapSense Proximity Sensing Demonstration

The CapSense proximity sensing demonstration shows how to use a proximity sensor to control LED color. The proximity detector requires a proximity antenna and can sense an object with approximately 2 to 3 inches of range. In the FirstTouch Kit, this sense antenna is formed by attaching the provided wire into the pin socket labeled PRX1 as shown in Figure 3-2.

Note how the shape and position of the wire affects the demonstration operation and the proximity sensing distance. Approach the CapSense proximity sensor slowly with your fingers and notice how the color of the LED changes. Removing your fingers leads to the LED color slowly reverting back to its initial state. The CY8C21434 PSoC that resides on the FTMF expansion card detects the relative proximity of your fingers to the FTMF expansion card and controls the LED's output.

4. Hardware

4.1 System Block Diagram

The CY3270 PSoC 1 FTK has the following sections.

- PC bridge (FTPC bridge)
- Multifunction card

Figure 4-1. System Block Diagram for FirstTouch PC Bridge (FTPC Bridge)

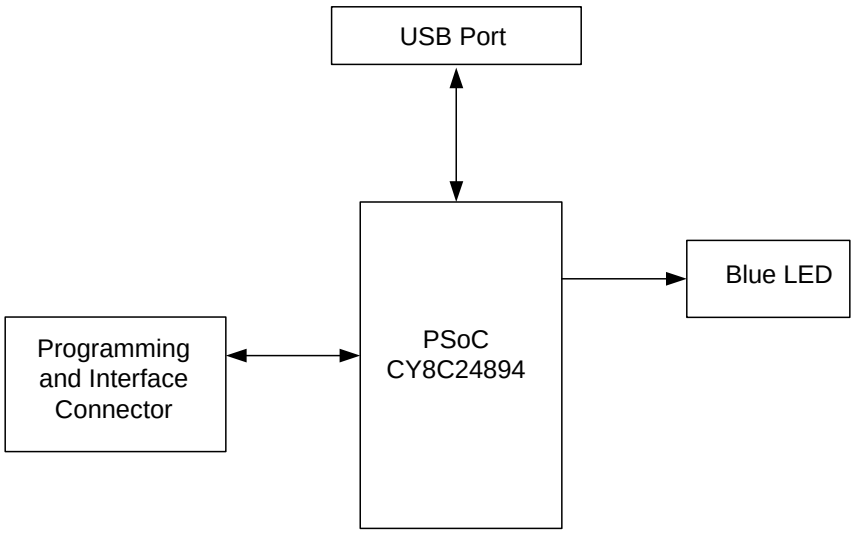

Figure 4-2. System Block Diagram for First Touch Multifunction Card

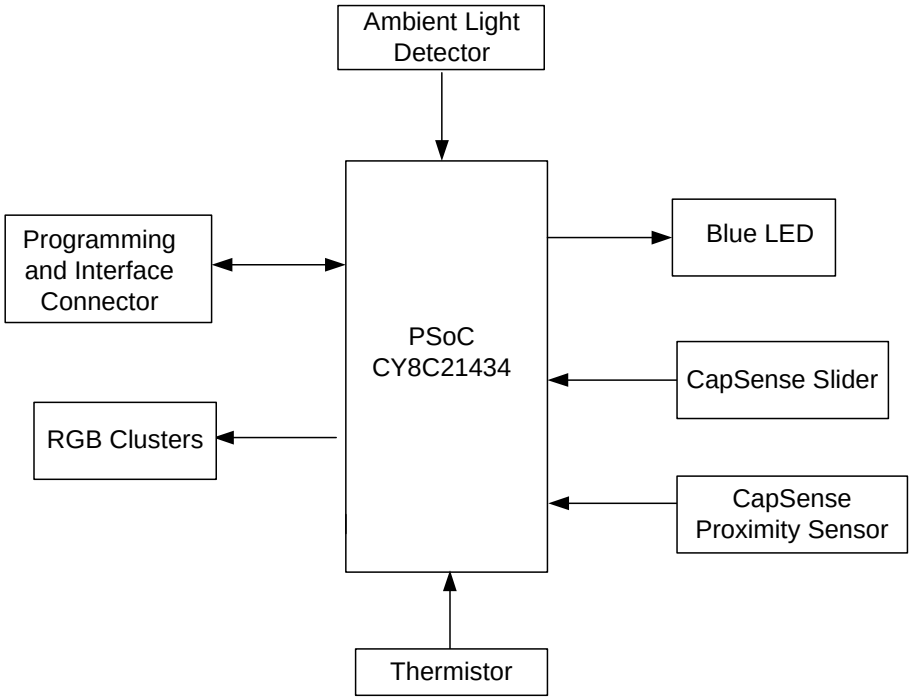

4.2 FTPC Bridge (First Touch PC Bridge)

The PC bridge consists of the CY8C24894 Hub. It contains a 16-pin connector to connect to the MultiFunction Board for application data exchange.The FTPC Bridge is the interface bridge between the expansion card, your PC, and the various applications.
Since the FTPC Bridge enumerates as a special type of 'composite device' that contains a PSoC Mini-Prog interface, the standard PSoC Programmer utility can identify and communicate with the FTPC bridge.

Universal Serial Bus (USB) is used to establish communication between the FTPC Bridge and a host controller (usually personal computers).The FTPC Bridge acts as the interface bridge between the expansion cards, your PC, and various applications such as PSoC Designer and the PSoC Programmer utility. The master CY8C24894 also acts as a PSoC programmer and downloads the firmware hex file on to the application.

The ISSP programmer programs PSoC ICs with *.hex* files created with the Cypress PSoC Designer software. The programmer programs a PSoC chip mounted on your PCB, one at a time. It connects to your PCB with a 5-wire cable and to your PC with a USB cable. Programming operation can be automated by incorporating the programmer into a PC-based test system. The tester software communicates with the programmer-control software through a command-line interface.

4.2.1 LED Usage

Blue LED

The blue LED blinks fast when the bridge is first connected to the USB port of a PC. After hot plug and play is established, it blinks at a periodic interval to indicate that the hub is enumerated and functioning normally.

The schematic for the FTPC Bridge shown in Figure 4-3 is in the CD included in the kit and on the CY3270 PSoC 1 FTK web page.

Figure 4-3. CY8C24894 Schematic

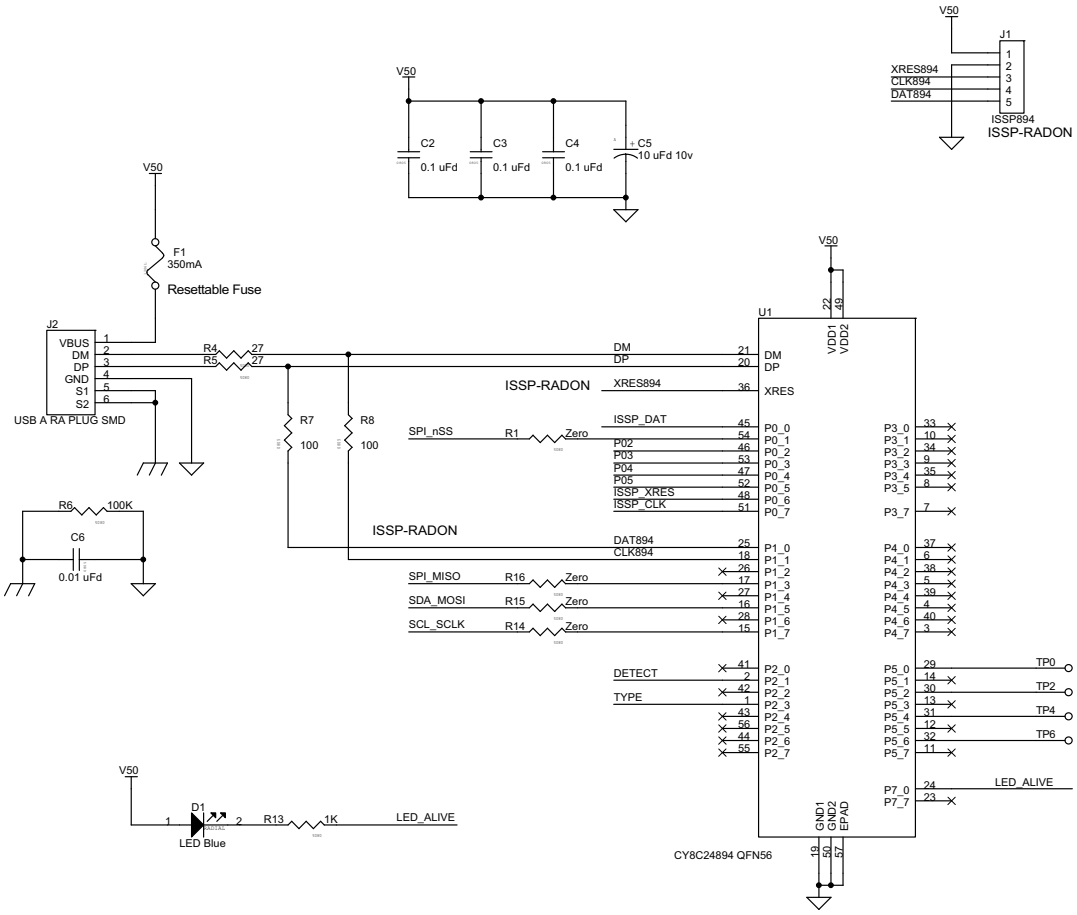

Note that the CY8C24894 PSoC device is the only active component in the entire circuit. This single PSoC handles all communications between the applications, USB, and expansion card interfaces.

The FirstTouch expansion card connects to the FTPC bridge through the 8×2 expansion port (this is a built-in port on the bridge). If you are using only the FirstTouch expansion card, it is not necessary to understand everything about this expansion port or the signals that it contains. By attaching an expansion card, all of the necessary connections are made.

Figure 4-4 is the pinout diagram for the FTPC expansion port. Refer to this figure as you create projects. As you get more accustomed to the FirstTouch Kit and design flow, you may want to make your own expansion cards and, at that time, want to review the interface signals.

Figure 4-4. FTPC Expansion Port Pinout Diagram

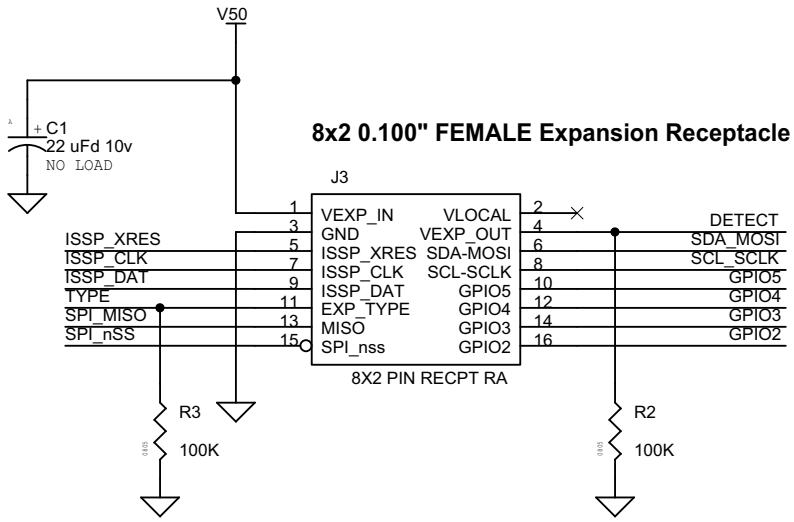

4.3 Expansion Card Overview

The FirstTouch expansion card is designed to plug and play with the FTPC bridge. All power for the included expansion cards is provided by the FTPC bridge directly from the USB bus. No other power supply is necessary when an expansion card is connected to the FTPC bridge. Connection to the FTPC expansion port is through the 8×2 pin header on the expansion card.

The FirstTouch expansion cards have a dedicated host PSoC device installed. The particular PSoC installed was chosen to act as an example as to which PSoC is most suitable for the types of applications that the particular expansion card supports. This also makes it easier to transfer your design from the FirstTouch kit to your hardware.

By having a dedicated host PSoC, you can program and then remove the expansion card from the FTPC bridge. When removed, it operates in a standalone mode or connects to your system-level hardware. This creates a design that provides ‘PSoC Powered Peripherals’ and quickly integrates them into your system. Before doing so, it is important to review the schematic for the particular expansion card to determine the proper power and ground connections and voltage levels.

The expansion card contains a variety of peripheral components that allow you to experiment with many different sensors and signal types. Each of the sensors use dedicated host PSoC I/O pins. Therefore, it is important to note which pins connect the various sensors to the host PSoC. These details are provided in the expansion card-specific portion of this guide.

4.4 Expansion Card Details

This section provides details for the expansion cards included with the CY3270 PSoC 1 FTK. Future expansion cards will include additional documentation and demonstration projects that are specific to their operation and configuration.

4.4.1 FirstTouch MultiFunction Expansion (FTMF) Card

The FTMF expansion card contains a CY8C21434 PSoC that acts as the 'host' for various demonstrations. The FTMF expansion card has hardware to support the following PSoC-powered peripheral applications:

- CapSense '7-Element Touch Slider'
- CapSense 'NonTouch/Proximity Detection'
- Ambient light-level detection
- Thermistor-based temperature measurement

In addition to the above input sensors, the FTMF card also provides the following output devices:

- Red-green-blue triple LED cluster
- Buzzer
- I^2C digital communications
- Four unused A/D GPIO lines for user functions

The dedicated sensors and output devices on the FTMF expansion card help you quickly evaluate and experiment with a variety of PSoC applications, without having to build any hardware. Your PSoC Designer project completely determines the remaining FTMF expansion card functions. The kit installation contains demonstration projects that use the following input sensors:

- CapSense slider
- Temperature sensor
- Ambient light sensor
- CapSense proximity sensor

The FTMF expansion card uses a standard FirstTouch expansion header to connect to the First-Touch RF expansion board or other target hardware.

Figure 4-5. FTMF Expansion Card Expansion Header Signals

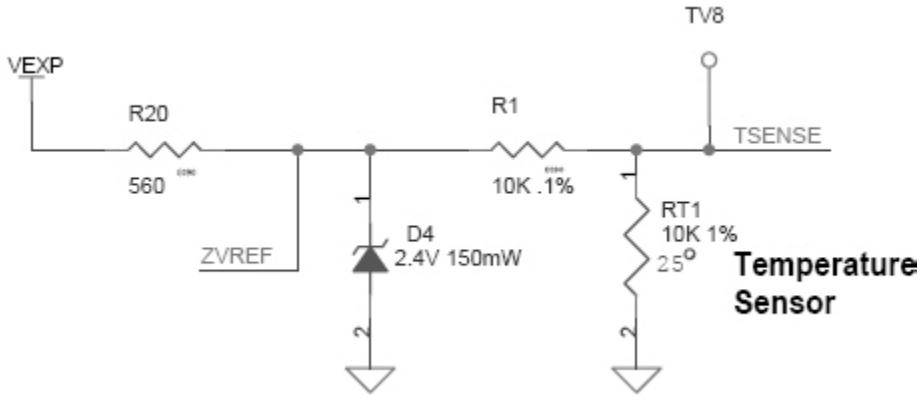

Note that the 8×2 pin expansion header also includes four GPIO connections labeled P02 to P05. These are hard wired to four unused Port 0 I/O pins on the CY8C21434 host and allow you to easily connect the FTMF expansion card to your specific hardware or sensors. GPIO pins on the PSoC are not connected to the header by default; zero ohm resistors (R9-R12) must be placed to use these GPIOs. These I/O pins are specifically chosen because they can operate as analog outputs, analog inputs, digital inputs, digital outputs, or any combination of the four types; this pin selection makes them true analog or digital GPIO. PSoC Designer project designates the specific function for these A/D GPIO pins.

You can use the sensors and output devices in any way you want within your project, but make certain you always assign the correct pins within your project. Failure to do so may cause unpredictable or unplanned project results.

Figure 4-6. On Board Thermistor Schematic

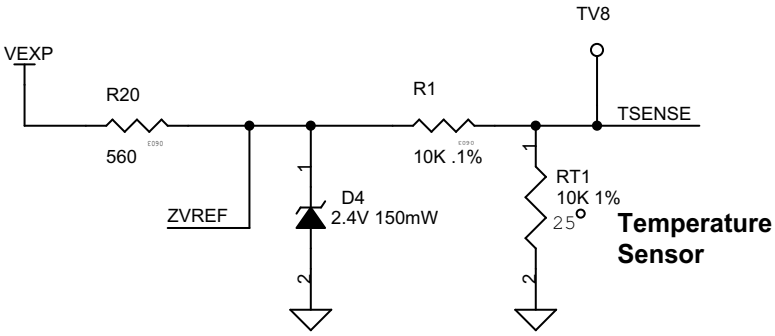

The thermistor is used to measure the temperature and will be given as the input to PSoC. The LEDs are used to represent the different values received from the device. A buzzer can be used as a sound alert when the data goes above or below a certain level.

Figure 4-7. CapSense Slider Schematic

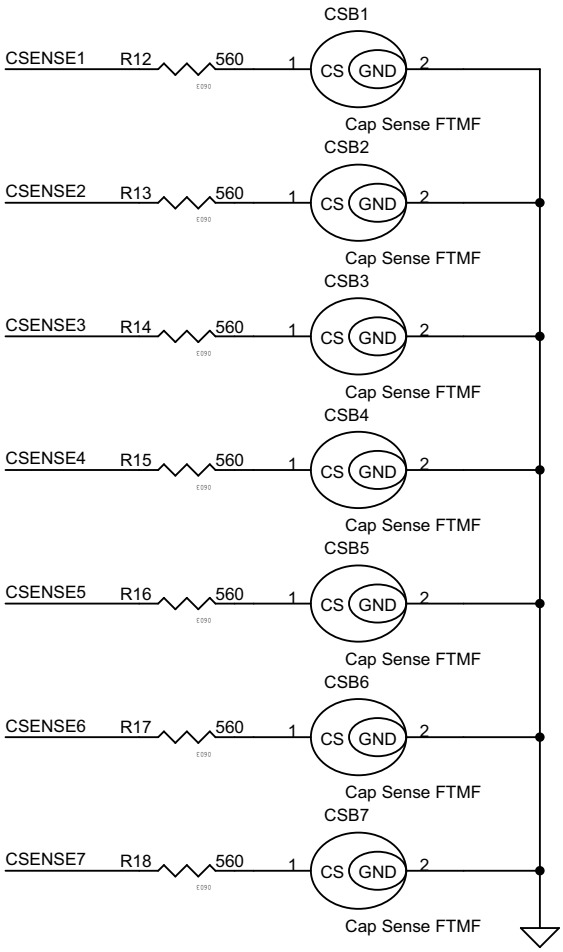

The CY8C21434 PSoC that resides on the FTMF expansion card detects your finger's position on the CapSense touch sensing slider and controls the LEDs output. Adopting capacitive sensing as an interface technology in high-volume, high-visibility applications such as portable media players and mobile handsets has created demand for the same technology in more conventional consumer electronics. Its hardware details are shown in the Figure 4-7.

Figure 4-8. Light Sensor Schematic

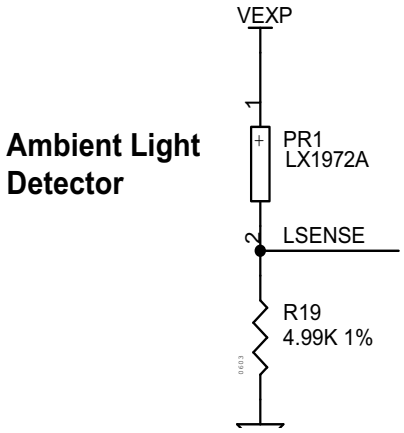

Ambient light sensors consist of a filter to sample visible light, a photo diode for detection of brightness, a digital filter, and a digital/analog converter. They are able to detect the intensity of surrounding light.

Figure 4-9. Proximity Sensor Schematic

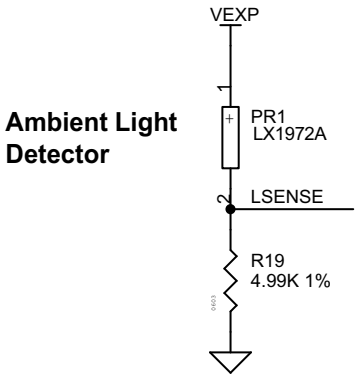

The proximity detector requires the use of a proximity antenna and can sense an object within approximately 2 to 3 inches of range. In the FirstTouch Kit, this sense antenna is formed by attaching the provided wire into the pin socket labeled PRX1.

Note Upon power-up, the FTMF establishes a baseline reading of the proximity antenna. It is, therefore, necessary to connect the proximity antenna prior to plugging in the FirstTouch kit.The project is set up to recalculate this baseline approximately every 30 seconds. Note how the shape and position of the wire affects the demonstration operation and the proximity sensing distance.

4.4.1.1 CY8C21434 Chip

The FTMF expansion card connects the various sensors and output devices to a predefined I/O of the host CY8C21434. It is important that you follow the pin assignment shown in Figure 4-10 and Table 4-1. Port P0[6] “LSENSE” is connected to the light sensor to receive signals for light sensitivity, P0[0] to sense temperature incident on the MF card. P1[6] drives a buzzer. P1[2], P1[3], and P1[4] are driving LED blue, red, and green respectively. P2[1] to P2[7] sense the touch on the 7-element CapSense region of the card.

Figure 4-10. CY8C21434 Master

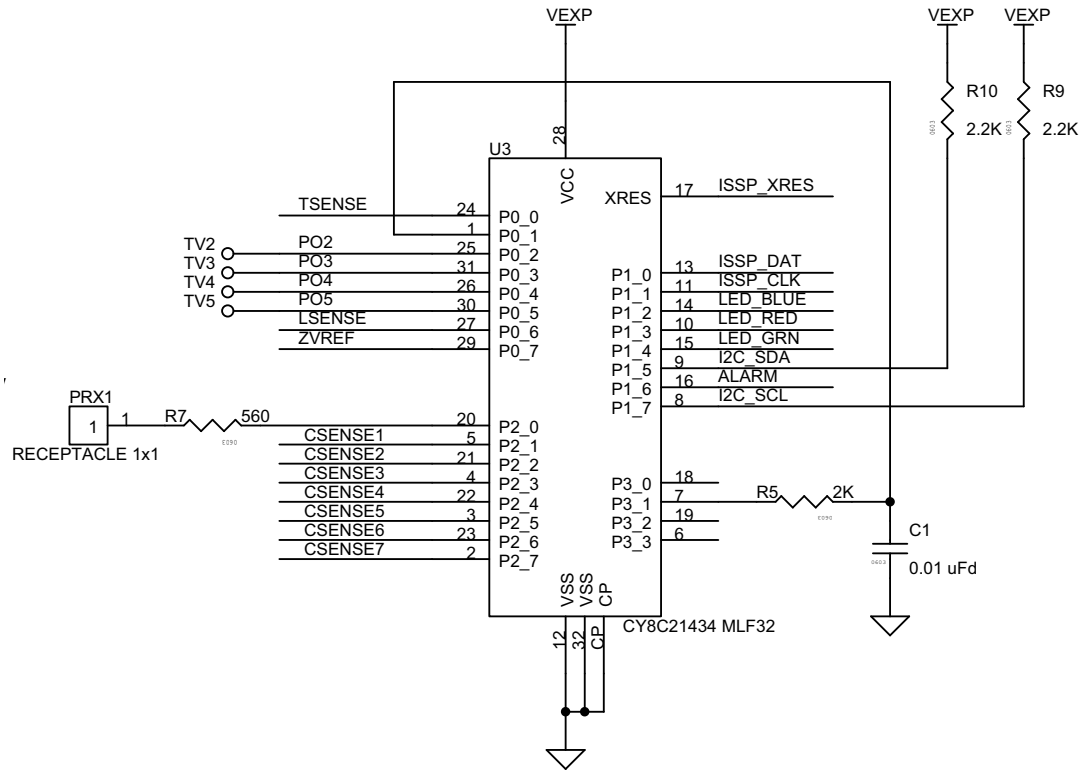

Table 4-1. FTMF PSoC Pin Assignments

Pin Number	Port Number	Design Function
1	P0[1]	CapSense modulator capacitor
2	P2[7]	CapSense slider element 7
3	P2[5]	CapSense slider element 5
4	P2[3]	CapSense slider element 3
5	P2[1]	CapSense slider element 1
6	P3[3]	Unused / no-connect
7	P3[1]	CapSense feedback resistor
8	P1[7]	I2C clock line (SCL)
9	P1[5]	I2C data line (SDA)
10	P1[3]	Red LED drive
11	P1[1]	In system programming clock (ISSP_SCLK)
12	GND	
13	P1[0]	In system programming data (ISSP_DAT)
14	P1[2]	Blue LED drive
15	P1[4]	Green LED drive
16	P1[6]	Alarm/buzzer FET drive
17	XRES	In system programming reset pin (ISSP_XRES)
18	P3[0]	Unused / no-connect

Table 4-1. FTMF PSoC Pin Assignments

Pin Number	Port Number	Design Function
19	P3[2]	Unused / no-connect
20	P2[0]	CapSense proximity antenna pad (PRX1)
21	P2[2]	CapSense slider element 2
22	P2[4]	CapSense slider element 4
23	P2[6]	CapSense slider element 6
24	P0[0]	Thermistor temperature sensor analog input
25	P0[2]	User A/D-GPIO
26	P0[4]	User A/D-GPIO
27	P0[6]	Ambient light detector analog input
28	+Vdd	
29	P0[7]	Thermistor drive-voltage reference analog input
30	P0[5]	User A/D-GPIO
31	P0[3]	User A/D-GPIO
32	GND	

5. Code Examples

5.1 My First Code Example

5.1.1 Project Objective

This code example demonstrates the CapSense feature of the FTMF board. The color of the LED changes with respect to the position of finger on the board.

The code example contains the following User Modules:

- **CSD**: The CSD module is used to scan the CapSense sensors and determine the finger position on the slider when touched.
- **LED**: LED is used to display the output based on the data from CapSense.
- **EzI2Cs**: The EzI2Cs module configures the PSoC on the multifunction board as an I^2C slave. The slave data is available for acquisition using a bridge board that is configured as I^2C master.

5.1.2 Flowchart

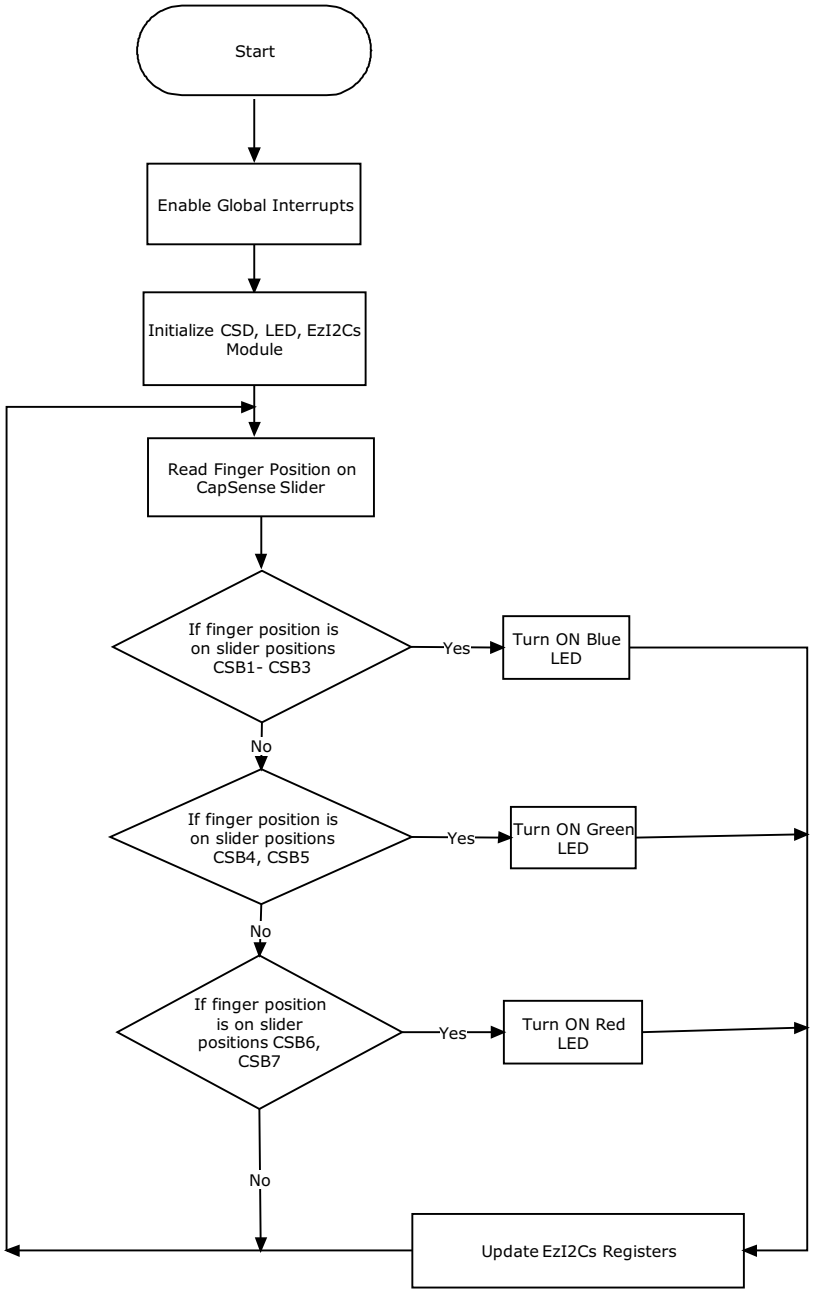

5.1.3 Creating My First PSoC 1 Project

1. Open PSoC Designer.
2. To create a new project, click **File > New Project.**
3. In the **New Project** window, select the **Chip-level** icon. Name the project **Example_My_First_PSoC_Project**; see Figure 5-1.
4. Click **Browse** and navigate to the directory in which the project is being created.

Figure 5-1. New Project Window

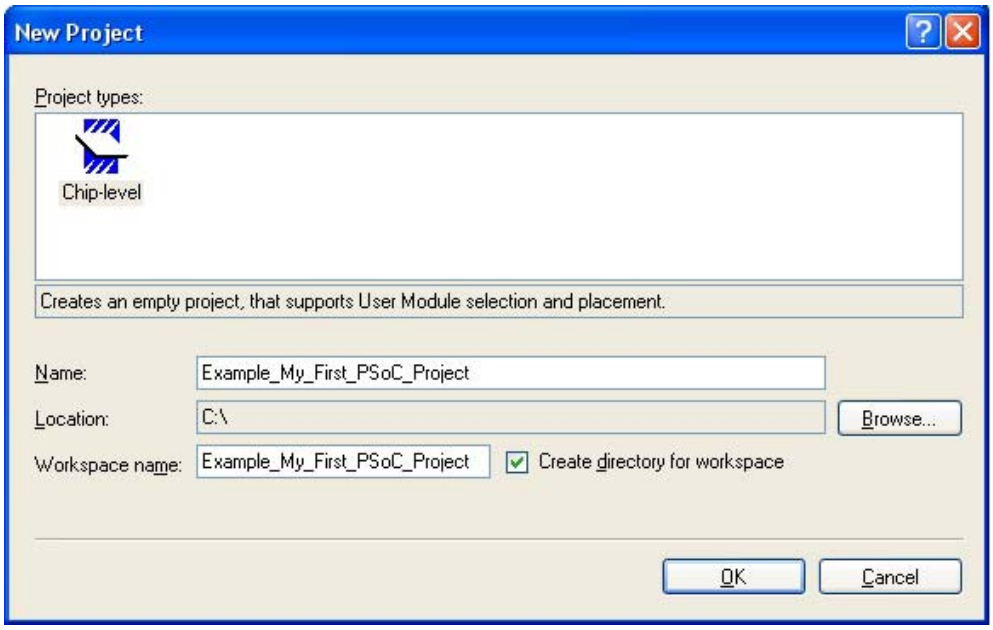

5. Click **OK.** The **Select Project Type** window opens.
6. In this window, under **Select Target Device**, click **View Catalog**.

Figure 5-2. Select Project Type Window

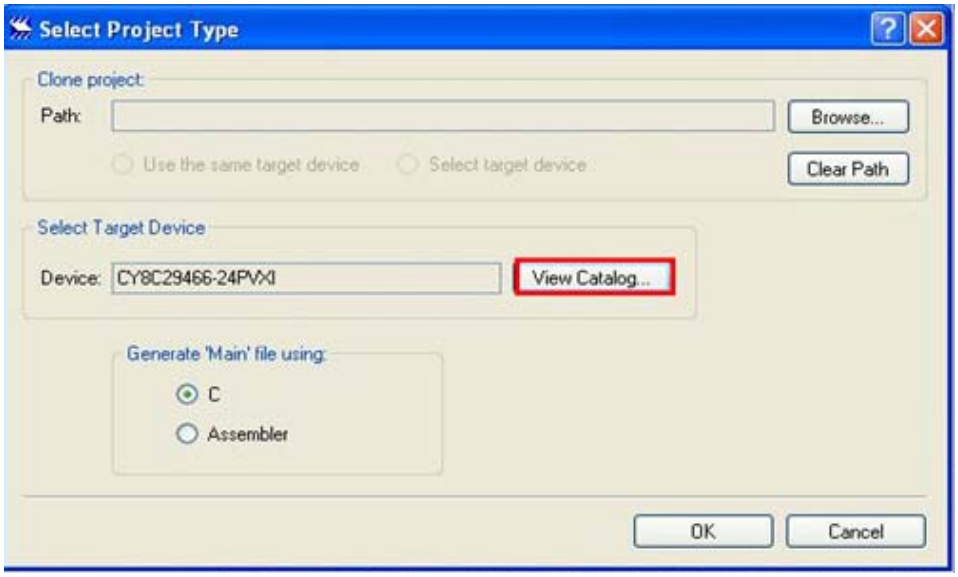

7. The **Device Catalog** window opens. Click the **All Devices** tab.
8. For this project click **CY8C21434-24LFXI** and then click **Select**.

Figure 5-3. Device Catalog Window

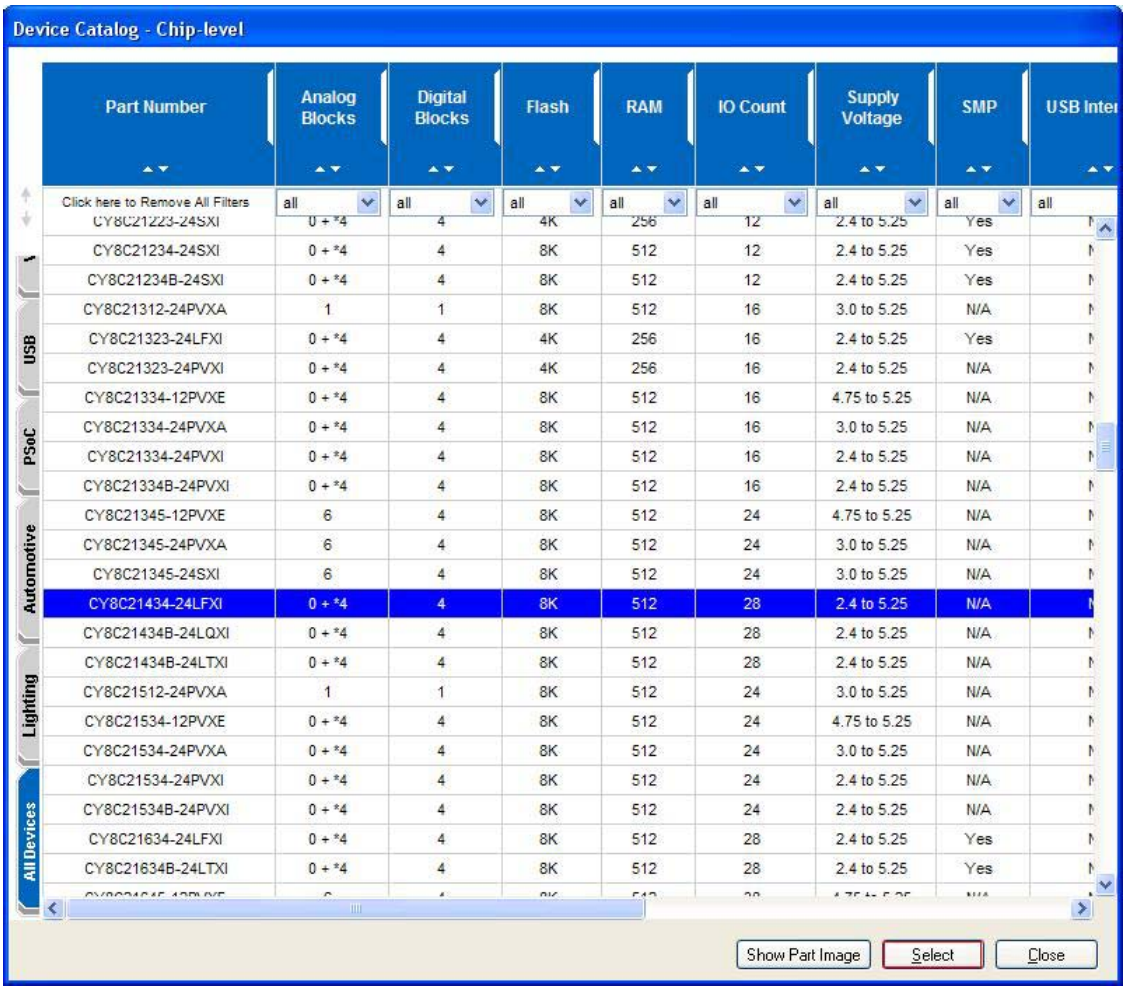

9. Under **Generate 'Main' File Using**, select **C** and click **OK**.
10. By default, the project opens in chip view.

Figure 5-4. Default View

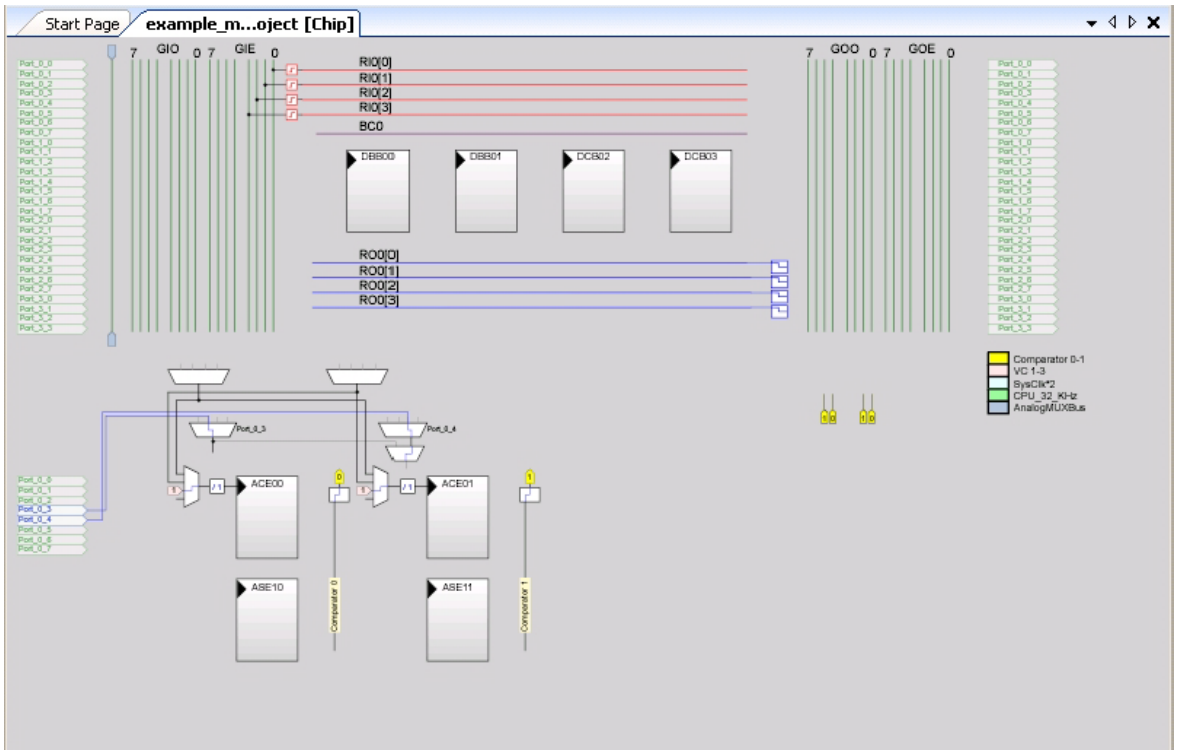

11. Now place and configure the modules required for this design. Connect the modules together and to the pins of the PSoC. In the **User Modules** window, select the **Cap Sensors** folder.

Figure 5-5. User Modules Window

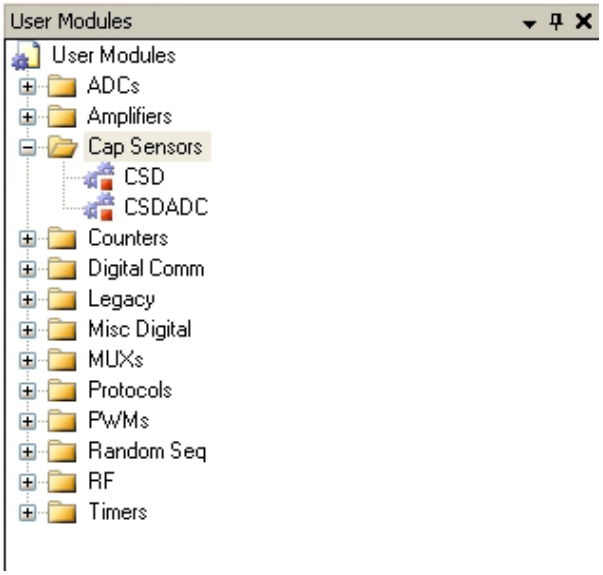

12. In the **Cap Sensors** folder, right click on **CSD** and select **Place**.

Figure 5-6. User Modules Window-CSD Select

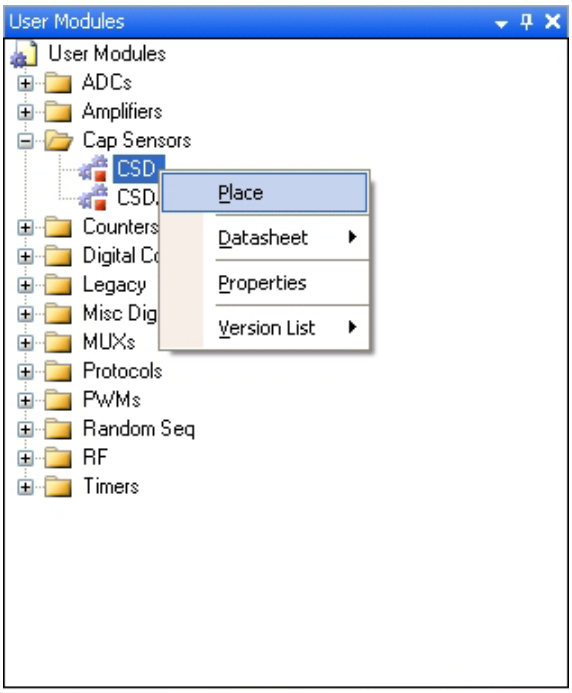

13. A pop-up window opens with the configuration of the CSD module to be selected. Select **CSD without clock prescaler** as the default module. Click **OK**.

Figure 5-7. CSD Configuration Window Select

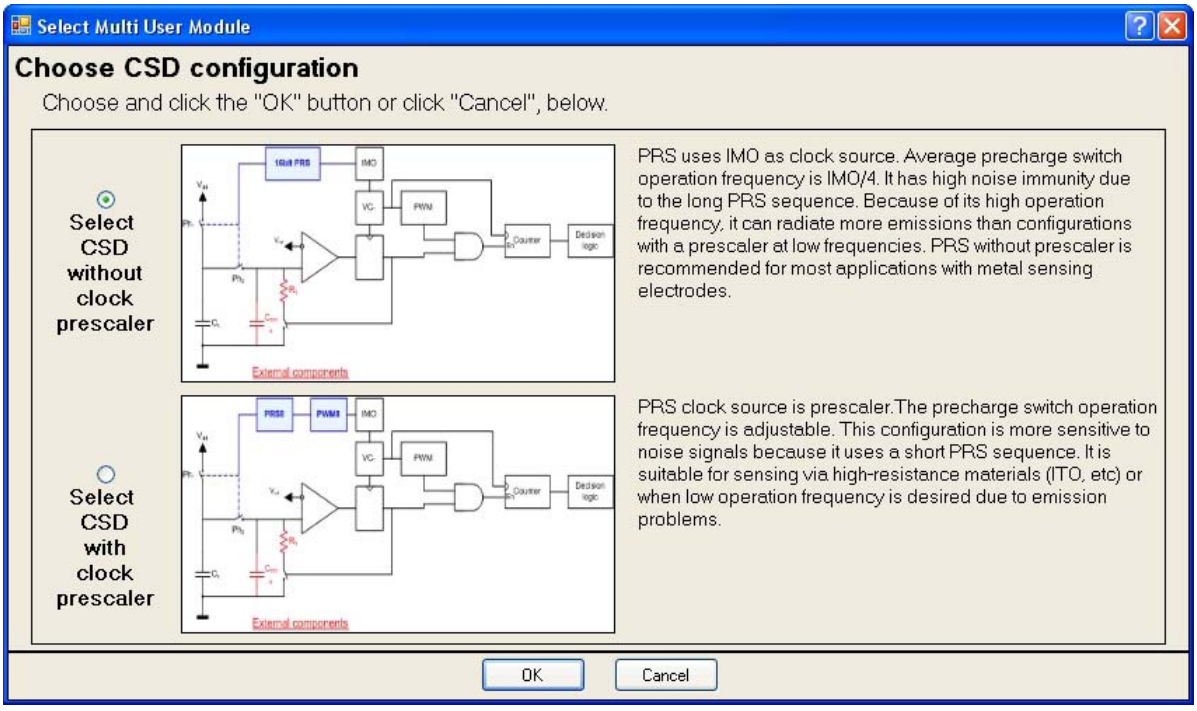

14. The User Module (UM) CSD is placed in the analog and digital blocks respectively.

Figure 5-8. CSD User Module Placement

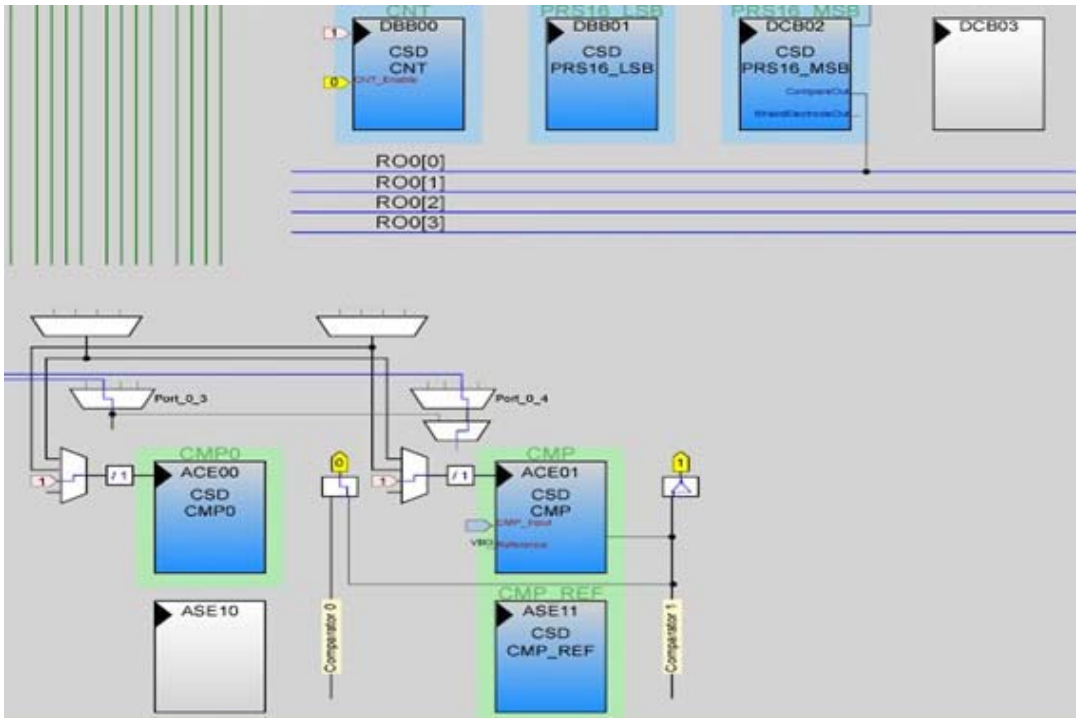

15. Rename **CSD_1** as **CSD** and configure the CSD properties.

Figure 5-9. Configure CSD Parameters Window

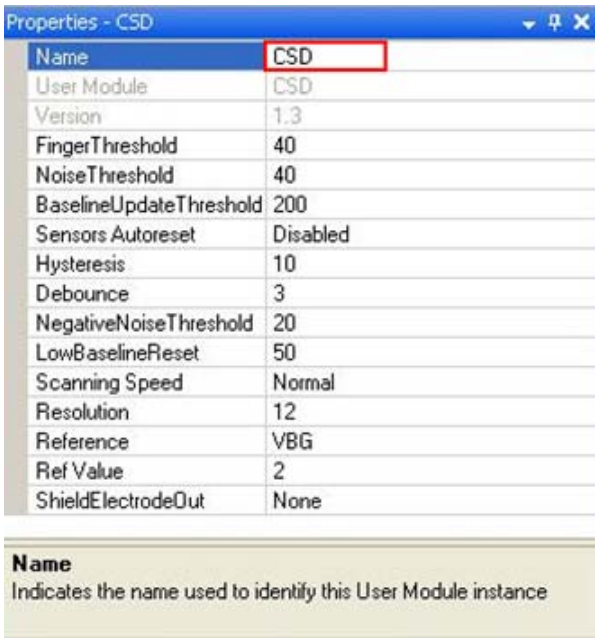

16. Right click on the **CSD user module** icon and select the **CSD Wizard** option to assign pins to the sensors properly.

Figure 5-10. Select CSD Wizard Window

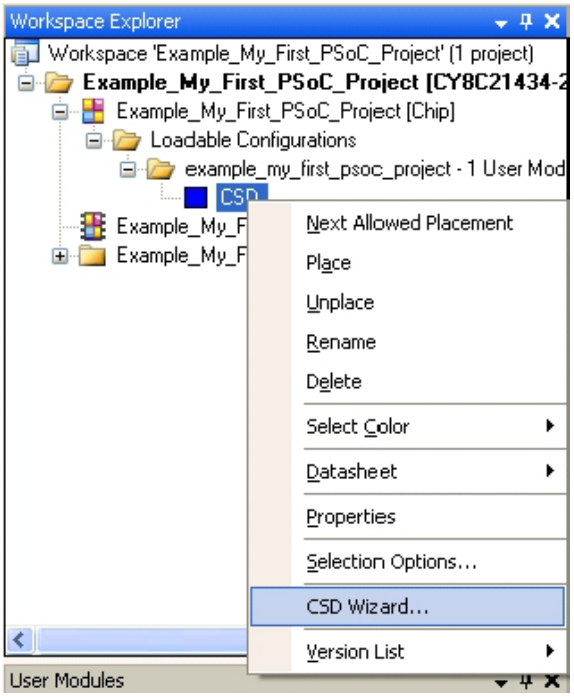

17. Open the **CSD Wizard** window.

Figure 5-11. Default CSD Wizard Window

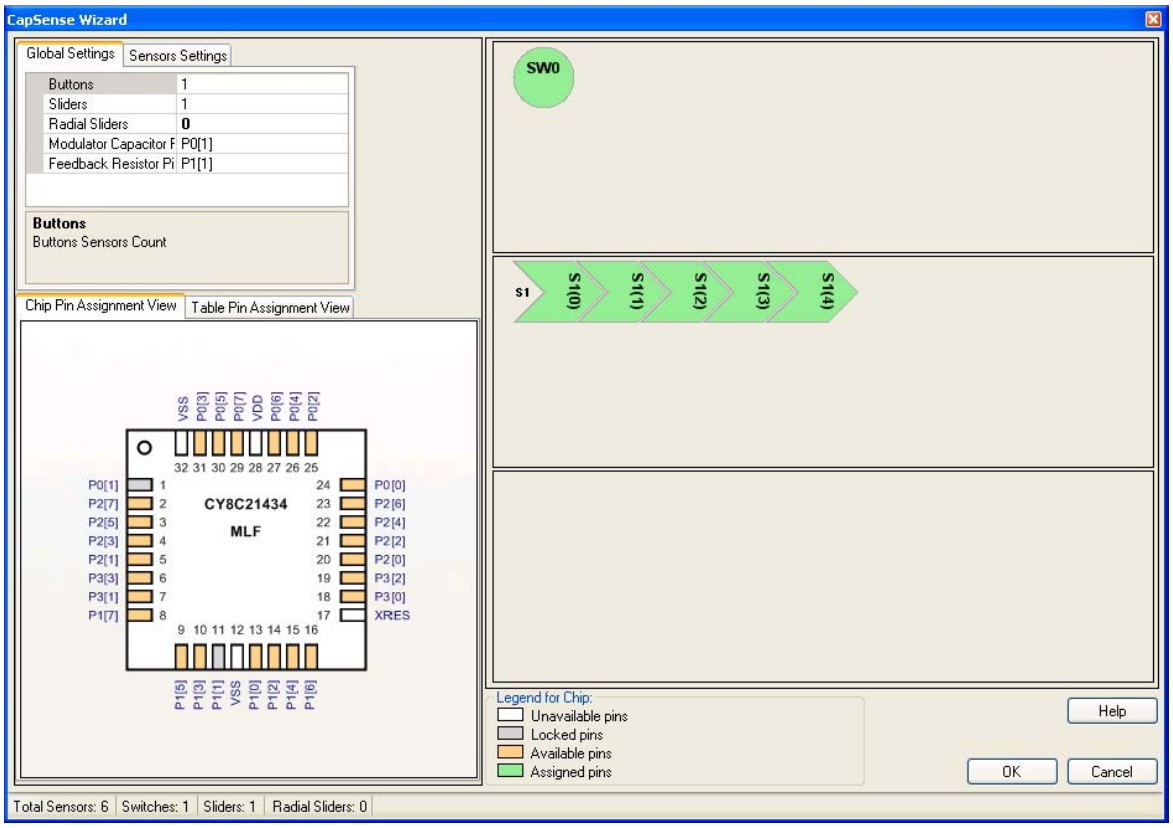

18. The following screenshot shows the default settings in the **Global Settings** window.

Figure 5-12. Default Global Settings Window

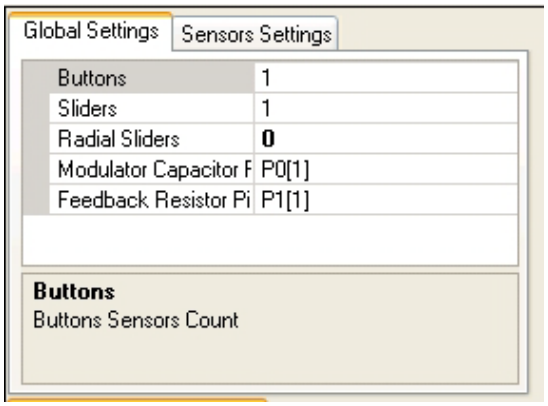

19. Configure the parameters in the window.

Figure 5-13. Configured Global Settings Window

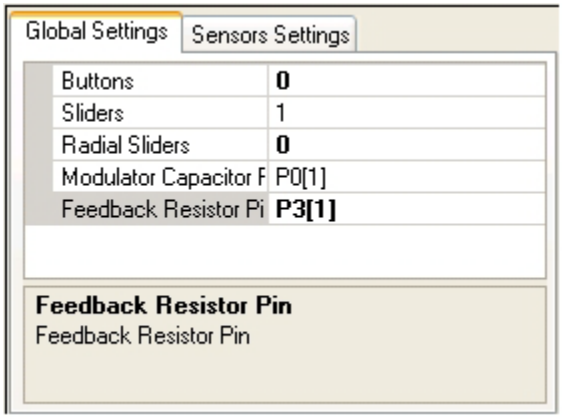

20. Click on **Slider** in the **CSD wizard** window. Following are the default settings in the **Sensors Settings** window.

Figure 5-14. Default Sensors Settings

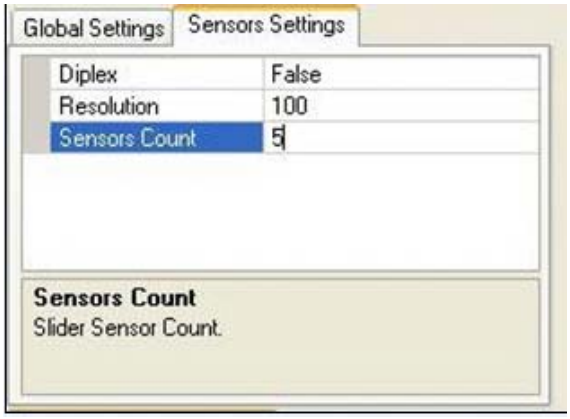

21. Configure the parameters in the **Sensors Settings** window.

Figure 5-15. Configured Sensor Settings

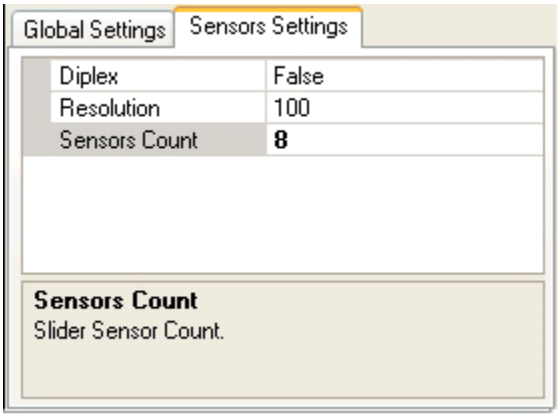

22. To assign the sensor on the particular pin, click and drag from the sensor block to the required pin in the **Pin Assignment** window. Drag and drop S1 (0) of the slider to pin P2 [0]. The assignment of the sensor pins can be done in either **Table Pin Assignment View** (Figure 5-16) or **Chip Pin Assignment View** (Figure 5-17).

Figure 5-16. S1 (0) Placed on P2 [0] Pin Block

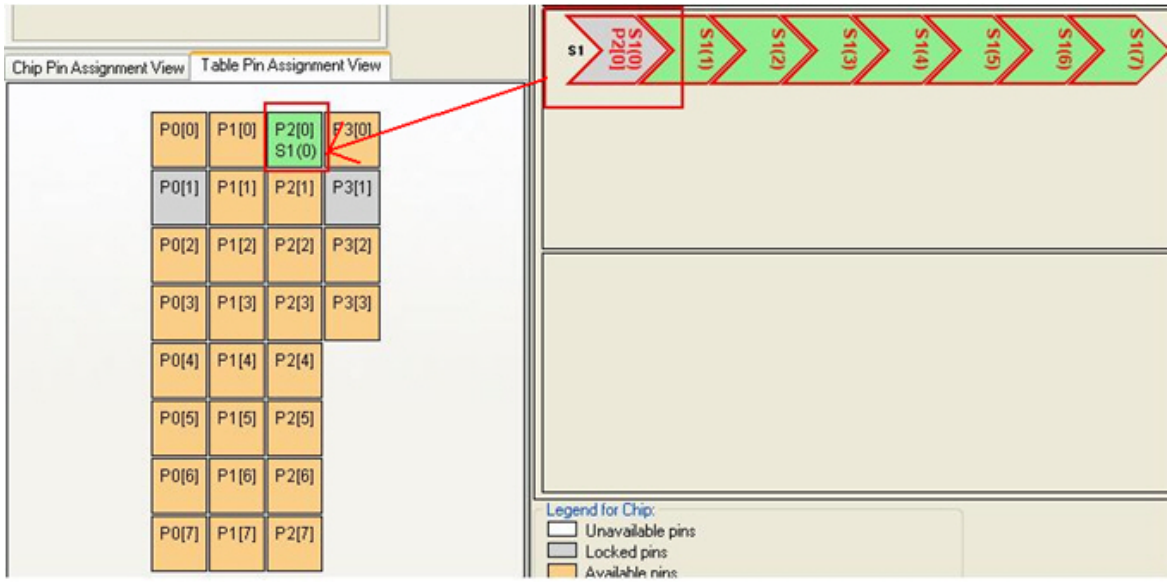

Figure 5-17. S1 (0) Assigned to Pin P2 [0]

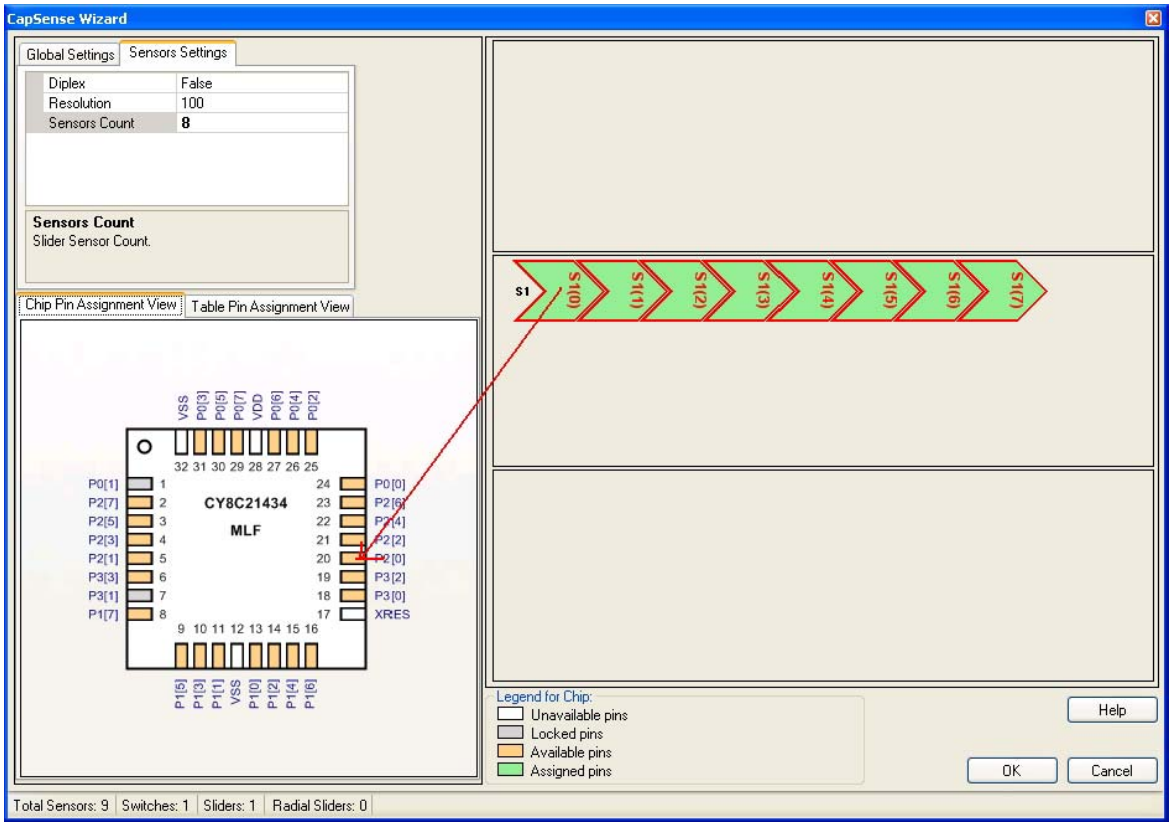

23. Similarly, assign all the sensors from S1(1) through S1(7) to pins P2[1] through P2[7] and click **OK**.

Figure 5-18. Sensors Assigned – Table Pin Assignment View

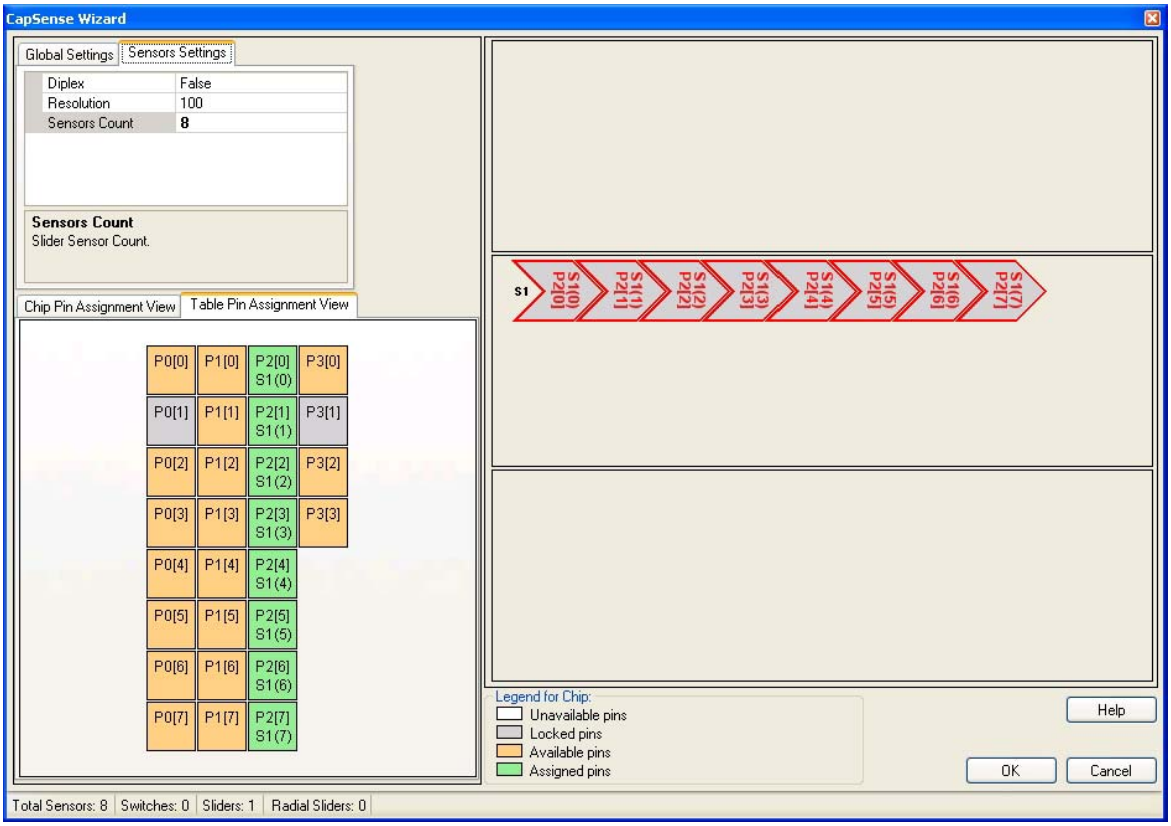

24. All the assigned sensors can be seen in **Chip Pin Assignment View**.

Figure 5-19. Sensors Assigned - Chip Pin Assignment View

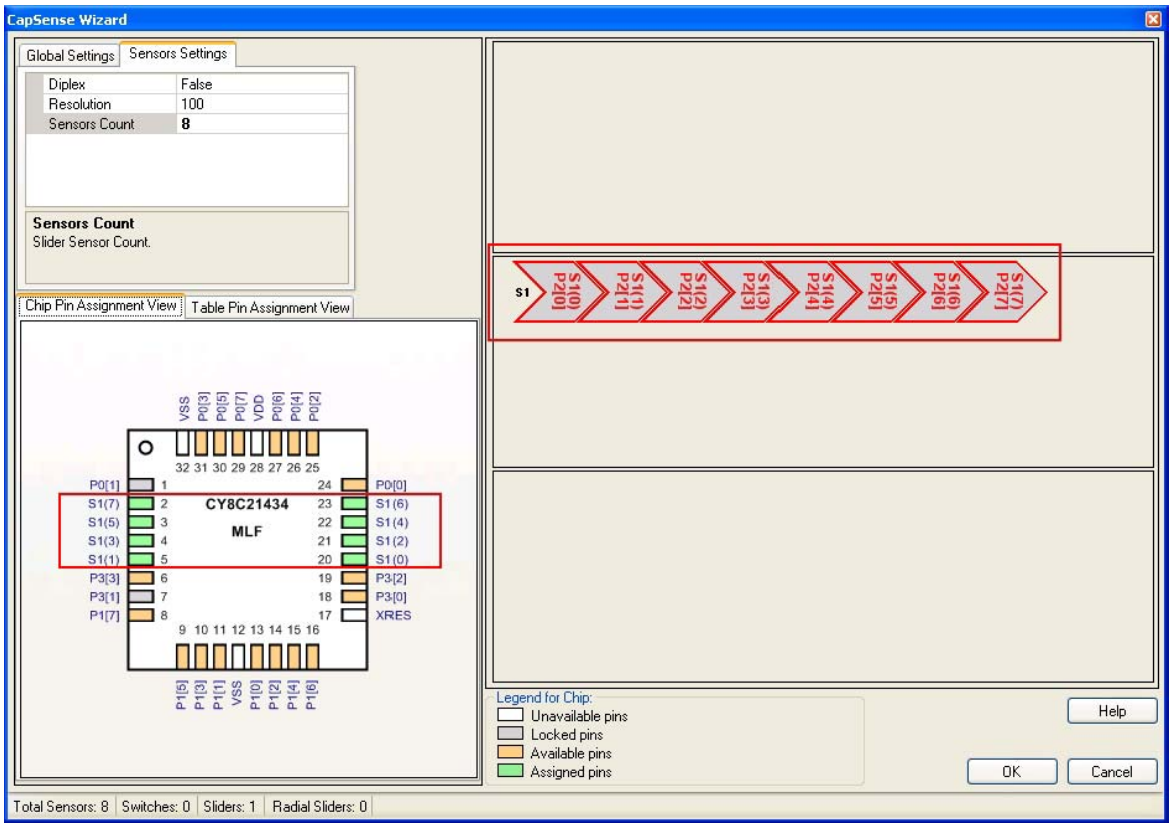

25. After configuration in the **CSD Wizard** window, the pins to which sensors are assigned can be seen in the **Chip Level** diagram.

Figure 5-20. CSD Component

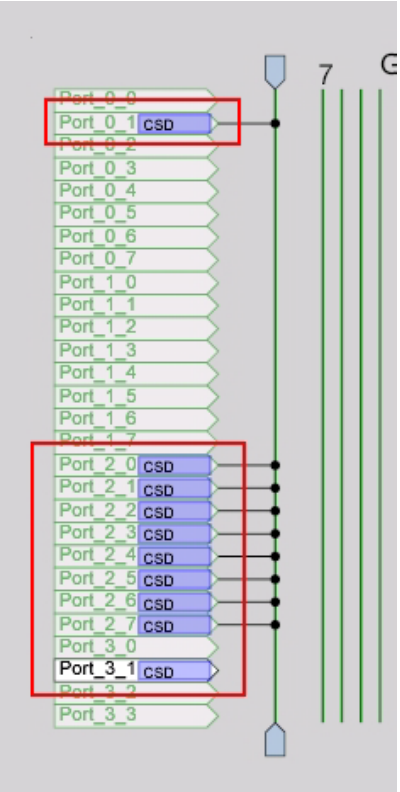

26. In the **User Modules** window, expand the **Digital Comm** folder, right click on **EzI2Cs**, and select **Place** to place an EzI2Cs in the design.

Figure 5-21. EzI2Cs User Module selection

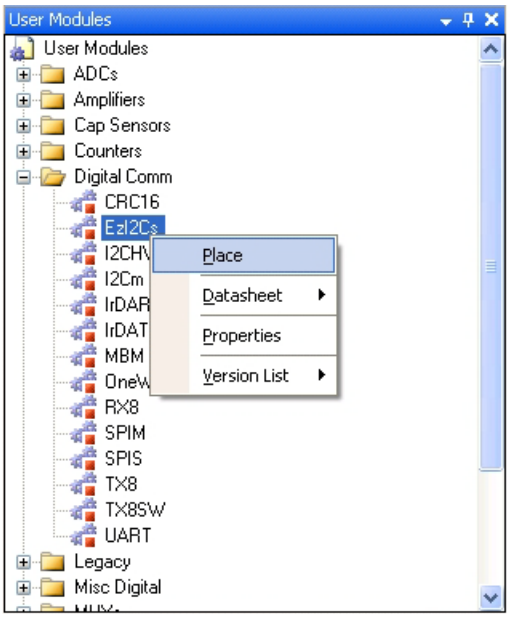

27. The EzI2Cs module does not require any digital or analog blocks for placement. It requires either (configurable) P1[0] and P1[1] or P1[5] and P1[7] port pins to operate as SCL and SDA.
28. Configure the **EzI2Cs properties**:

Figure 5-22. EzI2Cs Properties

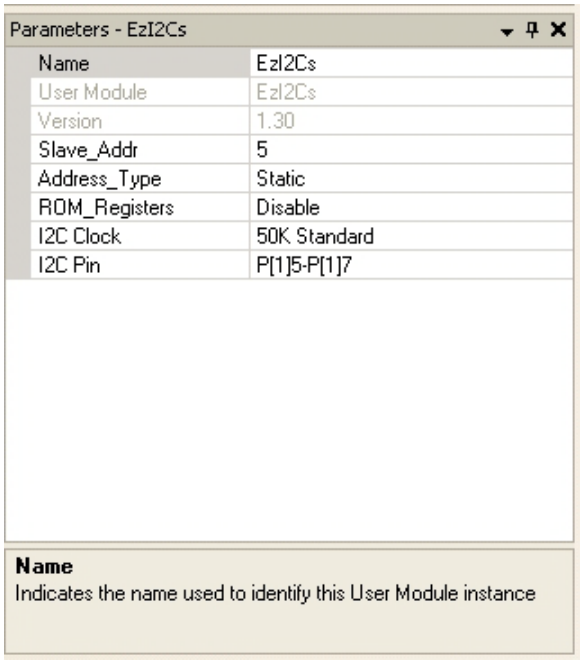

29. The EzI2Cs module can be seen in the Chip window.

Figure 5-23. EzI2Cs Component



30. In the **User Modules** window, expand the **Misc Digital** folder, right click on **LED,** and select **Place** to place the LED.

Figure 5-24. User Modules Window- LED Select

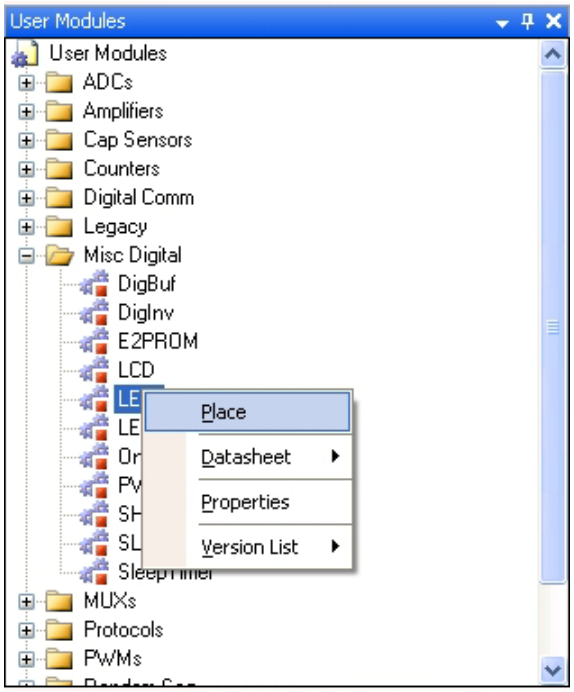

31. Configure **LED** properties and rename as **LED_BLUE**.

Figure 5-25. LED Properties

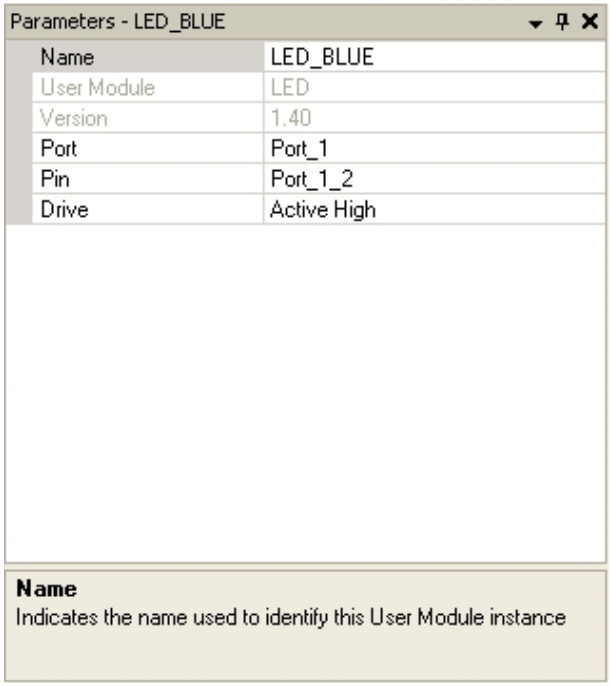

32. After the configuration, **LED_BLUE** is assigned and is visible in the **Chip Level** diagram.

Figure 5-26. LED User Module Placement

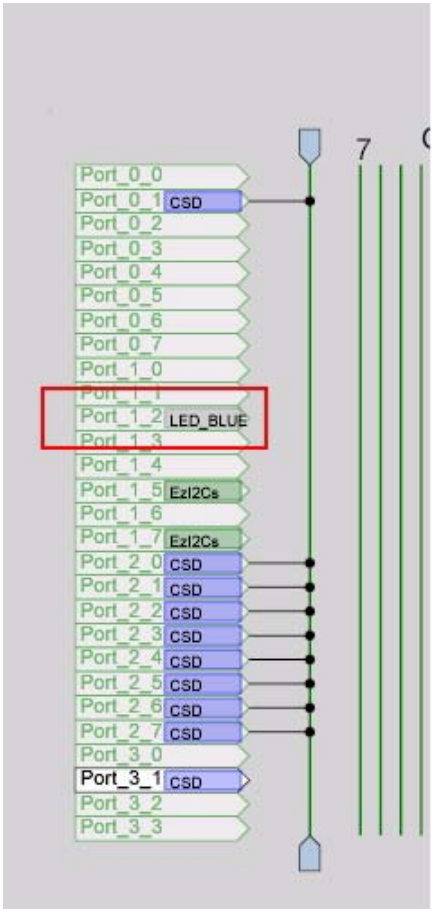

33. Place two more LED modules and configure as shown in the following screenshots.

Figure 5-27. LED Red Properties.

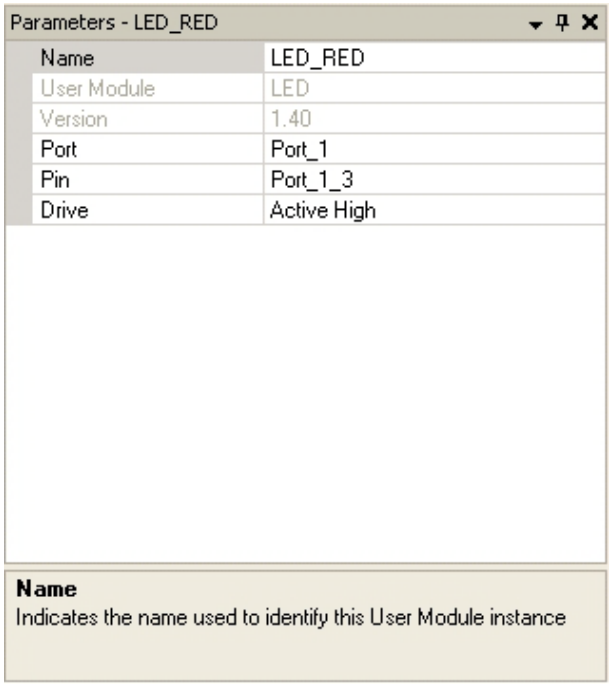

Figure 5-28. LED Green Properties

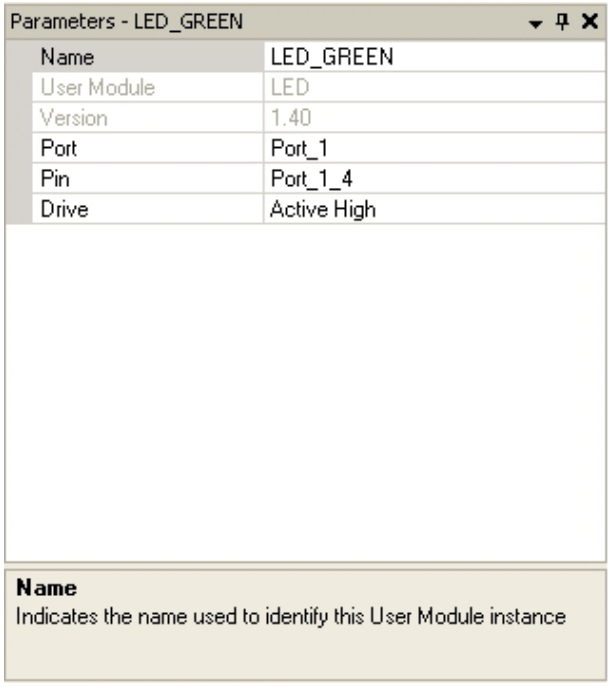

34. Place **LED_GREEN**, **LED_RED,** and **LED_BLUE** in their respective ports.

Figure 5-29. All LEDs Placed

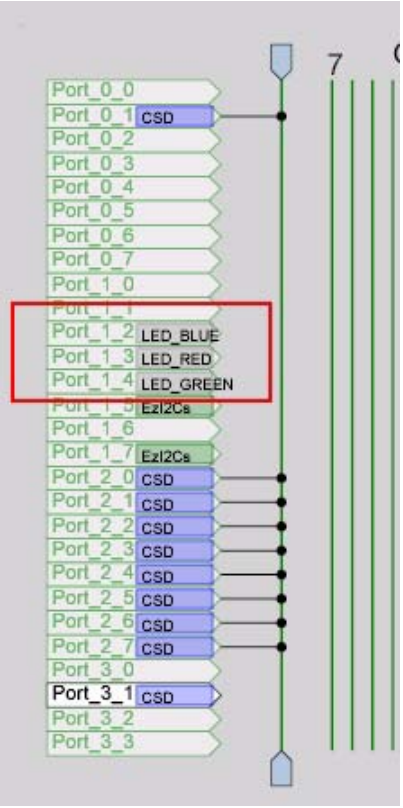

35. Keep the default values for the **Global Resources** window.

Figure 5-30. Global Resources Window

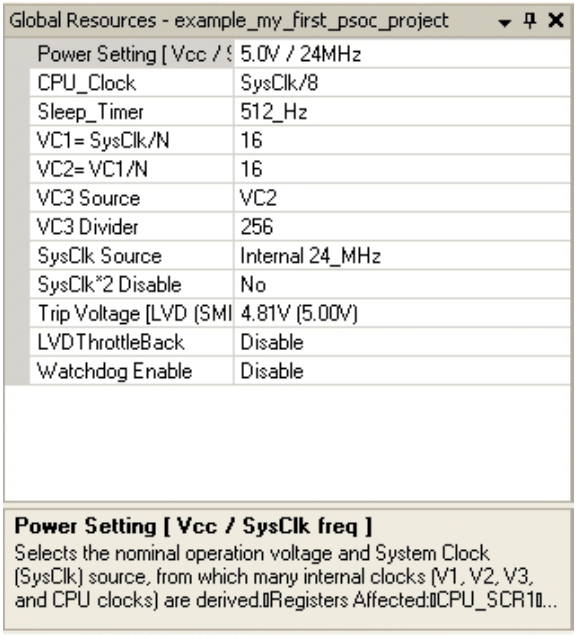

36. Open the existing *main.c* file within **Workspace Explorer**. Replace the existing *main.c* content with the content of the embedded ***Example_ My_First_PSoC_Project_Main.c*** file, which is attached with this document.

Figure 5-31. Workspace Explorer Window

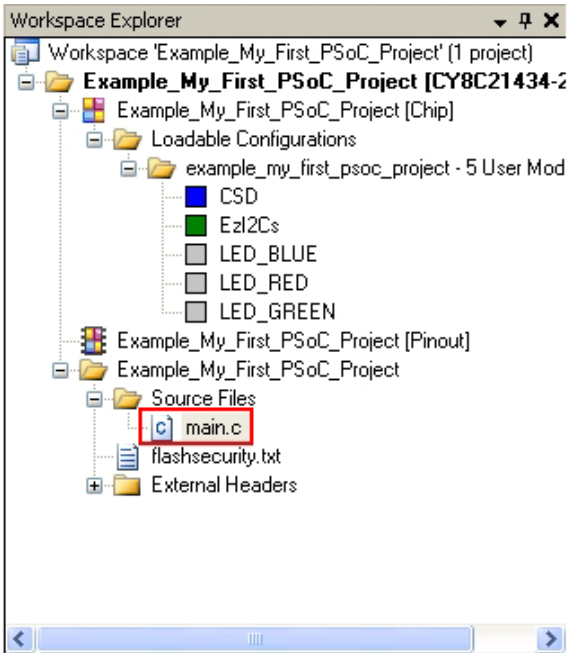

37. Save the project.
38. Build the project; **Build > Generate/Build 'Example_My_First_PSoC_Project' Project.**
39. Connect the **FirstTouch Multifunction Expansion(FTMF)** card to the PC Bridge.

Figure 5-32. FTMF Card Connection with PC Bridge

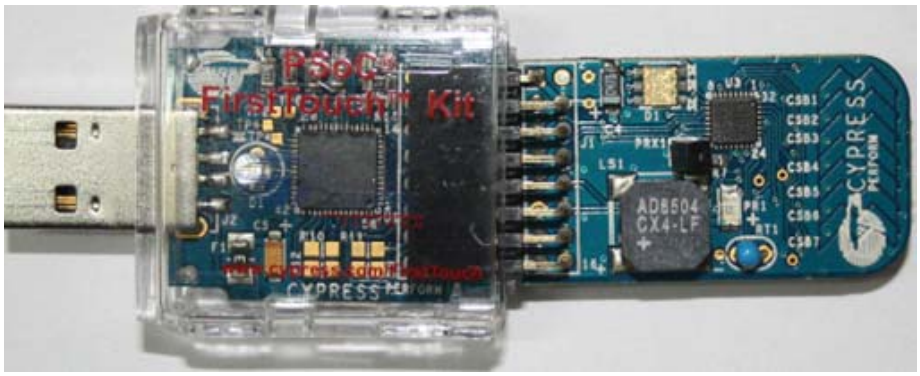

40. FTMF is programmed using **PC Bridge**.
41. The blue LED blinks fast when the bridge is first connected to the USB port of a PC. After hot plug and play is established, it blinks at a periodic interval to indicate that the bridge is enumerated and functioning normally.
42. To program the board through **PSoC Designer IDE**, follow these steps.
43. Click **Program** > **Program Part** (see Figure 5-33).

Note When programming the board through PSoC Designer, close any open instance of PSoC Programmer.

Figure 5-33. Program Part Window

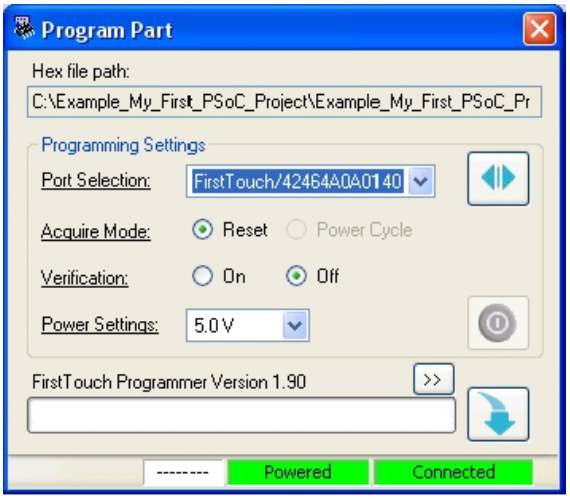

44. In the **Program Part** window, set up the following:
    a. In the Port Selection drop down box, FirstTouch/<MiniProg Number> is selected and it is 'Connected'
    b. Acquire Mode: Reset
    c. Verification: Off
    d. Power Settings: 5.0 V
45. Click on the **Program** button to start programming the board. The programming status can be observed on the progress bar.

Figure 5-34. Programming Status

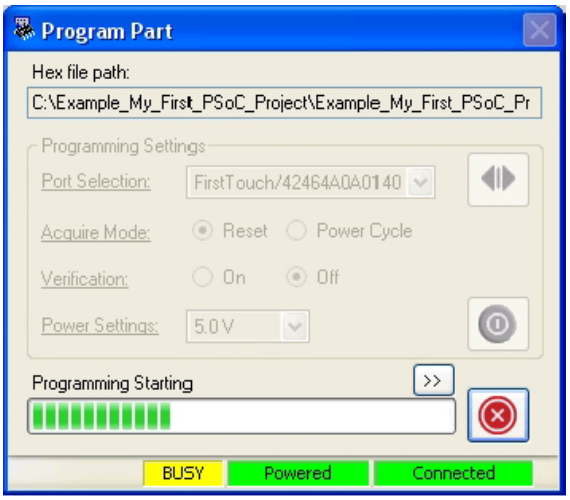

46. When programming is successful, the **Operation Succeeded!** message is displayed.

Figure 5-35. 'Operation Succeeded!' Message

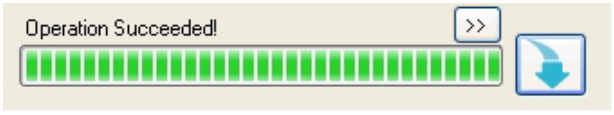

47. Disconnect the PC Bridge from the USB port of the PC.

5.1.3.1 *Verify Output*

1. Connect the PC Bridge to PC.
2. Connect the MultiFunction card to the PC bridge.
3. Move your finger across the CapSense slider to detect LED color change.

- When the finger position is on slider position CSB1-CSB3, the LED emits the color blue.
- When the finger position is on the slider position CSB4 or CSB5, the LED emits the color green.
- When the finger position is on the slider position CSB6 or CSB7, the LED emits the color red.

4. For all other slider positions, the LED is OFF. This includes the absence of a finger on the slider.

Figure 5-36 shows the change in LED color with respect to position of the finger on the board.

Figure 5-36. LED Color Variation with Respect to Finger Position



5.2 MultiFunction Expansion Card Light Sensor

The purpose of this code example is to demonstrate a light sensor. In this code example, the light sensor is used to control the brightness of the LED array

The code example contains following User Modules:

- **ADC8**: This module converts the analog input to the digital form.The ADC8 module is used to obtain the digital values for the light intensity.
- **LED**: LED is used to display the output based on the data from ADC.
- **EzI2Cs**: The EzI2Cs module configures PSoC on the MultiFunction board as I2C slave. The slave data is available for acquisition using a bridge board that is configured as I2C master.

5.2.1 Device Configuration

The chip level view of the code example, after placing all the required user modules, is shown in Figure 5-37

Figure 5-37. Device Configuration of Light Sensor

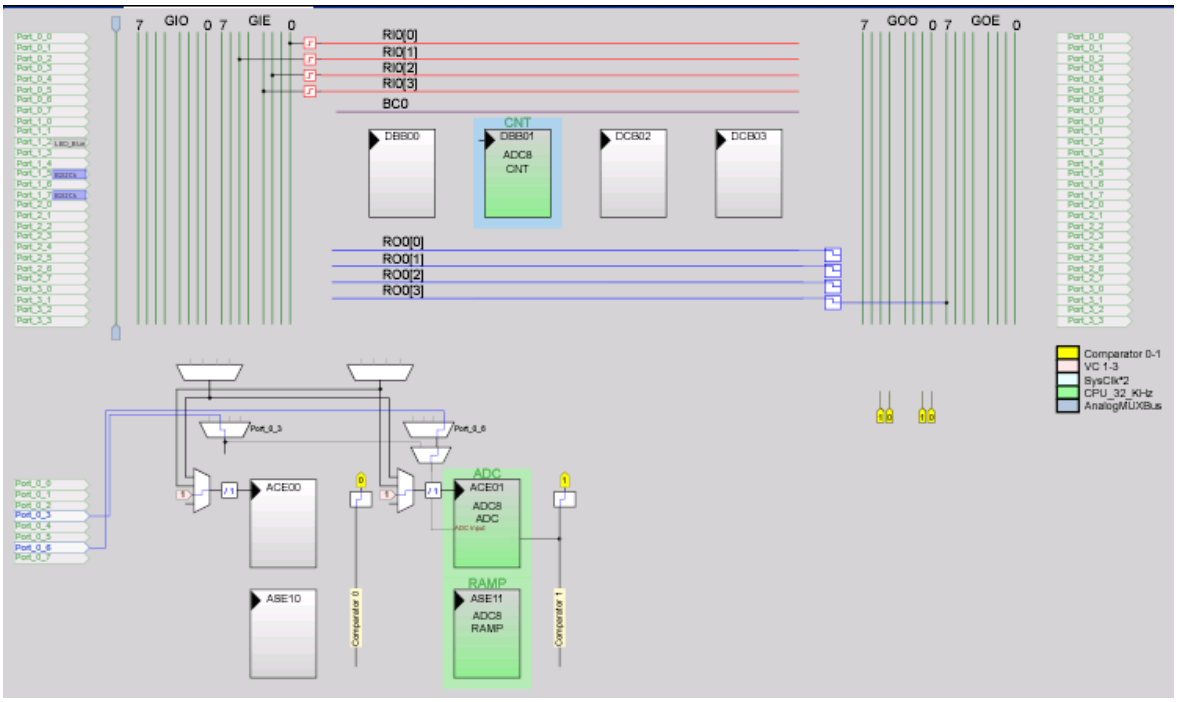

5.2.2 Firmware Architecture

5.2.2.1 Flowchart

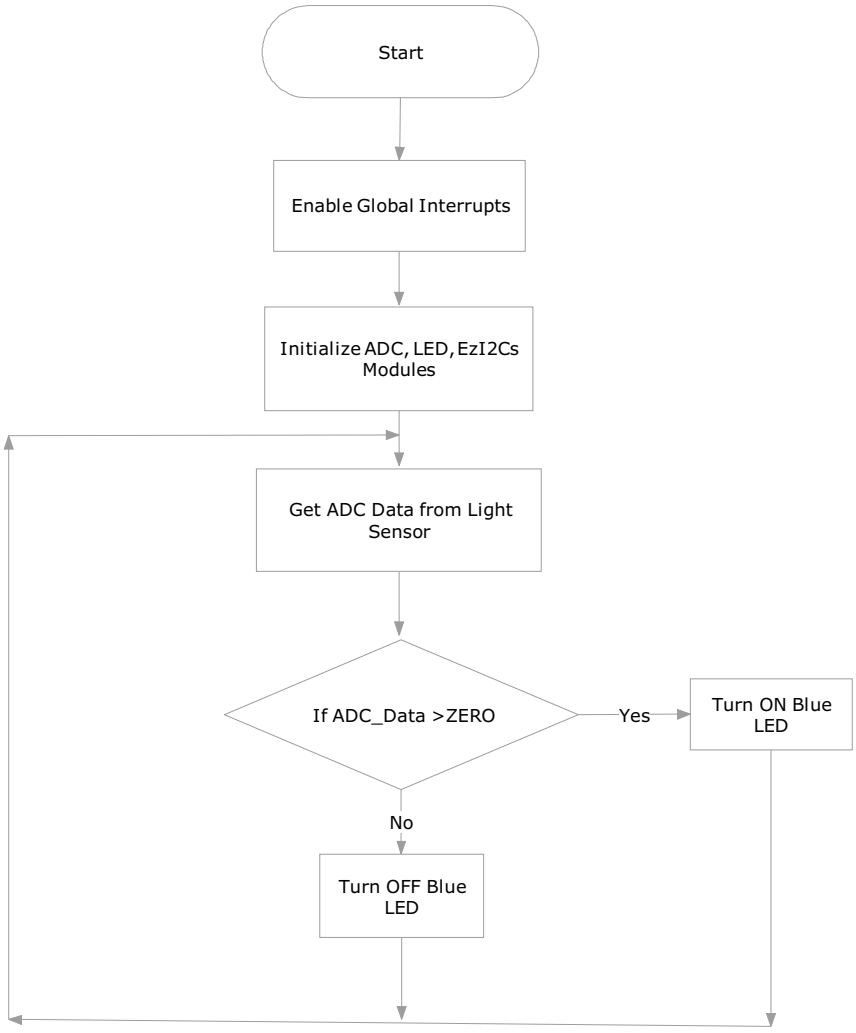

5.2.2.2 Verify Output

1. When light is present, the LED is switched ON
2. When light is not present, LED is switched OFF

Figure 5-38. Light Sense Output

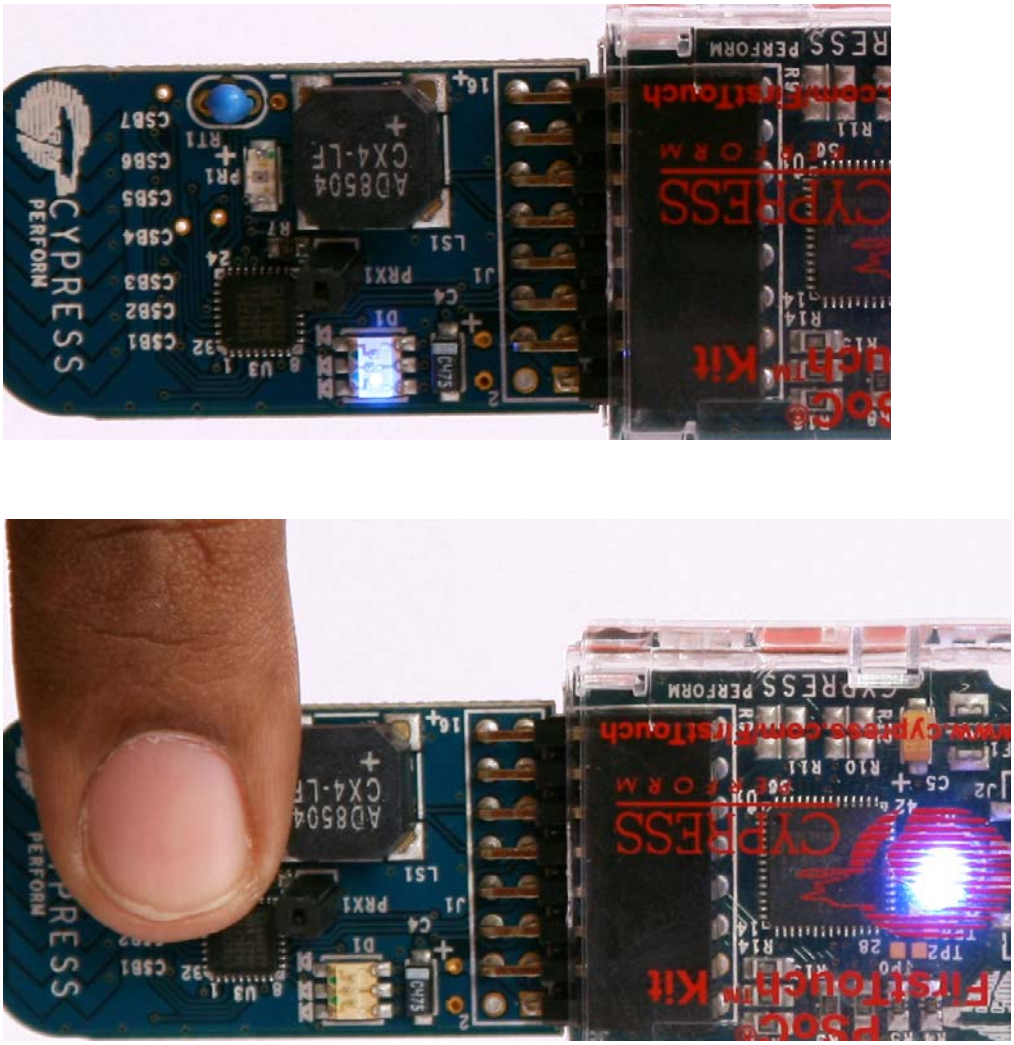

5.3 MultiFunction Expansion Card Proximity Sensor

This code example demonstrates the capacitive sensing and proximity detection capability of Cypress's PSoC technology. Proximity detection requires that you use the supplied blue proximity antenna.

Insert the bare end of the wire in the PRX1 connector located in the middle of the board. As you move your finger near and far from the proximity detection antenna, the red and green LEDs turn on and off. At close proximity, the green LED turns ON.

The code example contains the following User Modules

- **CSD**: The CSD module is used to scan the CapSense based proximity sensor and determine the proximity of a object to the antenna.
- **LED**: LED is used to display the output based on the data from CapSense.
- **EzI2Cs**: The EzI2Cs module configures the PSoC on Multifunction board as I2C slave. The Slave data is available for acquisition using a Bridge Board that is configured as I2C Master.

5.3.1 Device Configuration

The chip level view of the code example, after placing all the required user modules, is shown in Figure 5-39.

Figure 5-39. Device Configuration of Proximity Sensor

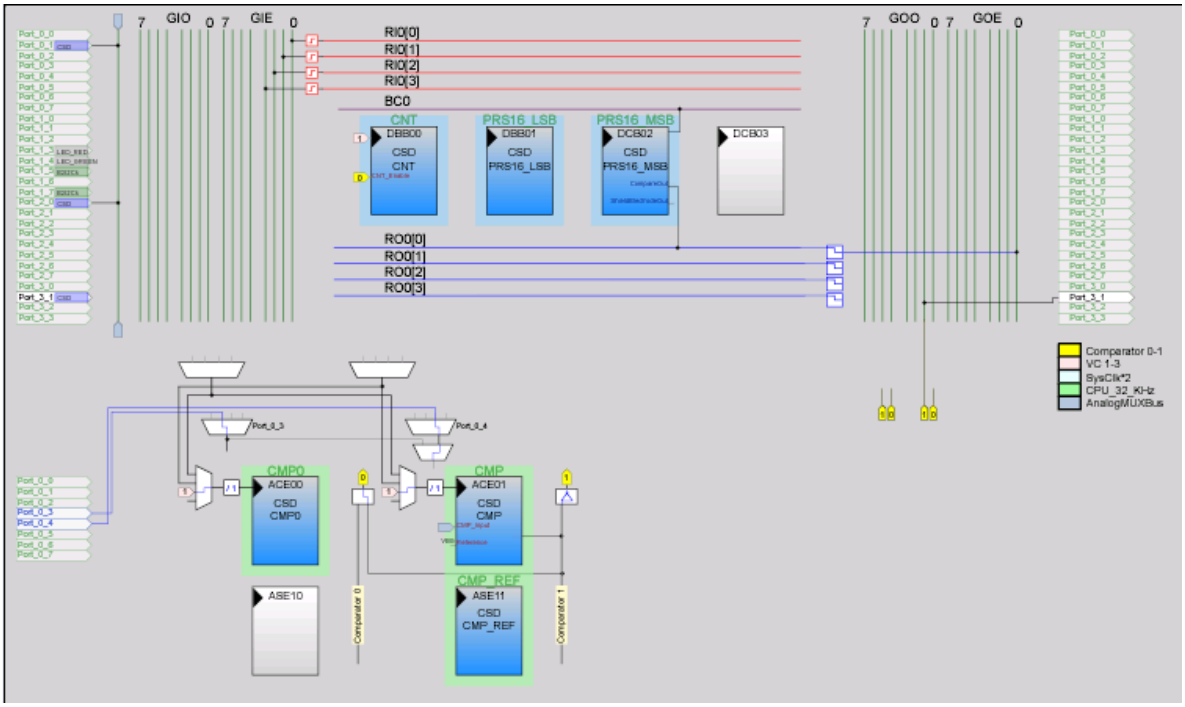

5.3.2 Firmware Architecture

5.3.2.1 Flowchart

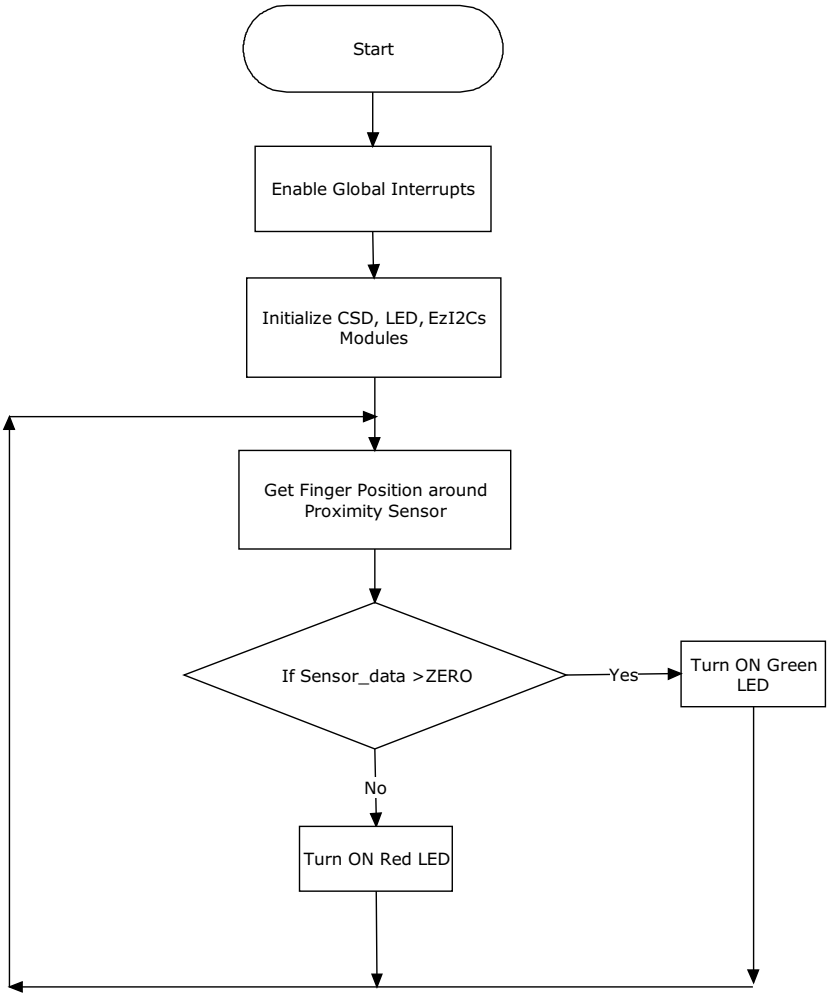

5.3.2.2 Verify Output

1.The color changes when the finger is taken near the proximity antenna

2.The color remains red when no data is received from the antenna

Figure 5-40. Proximity Antenna Output

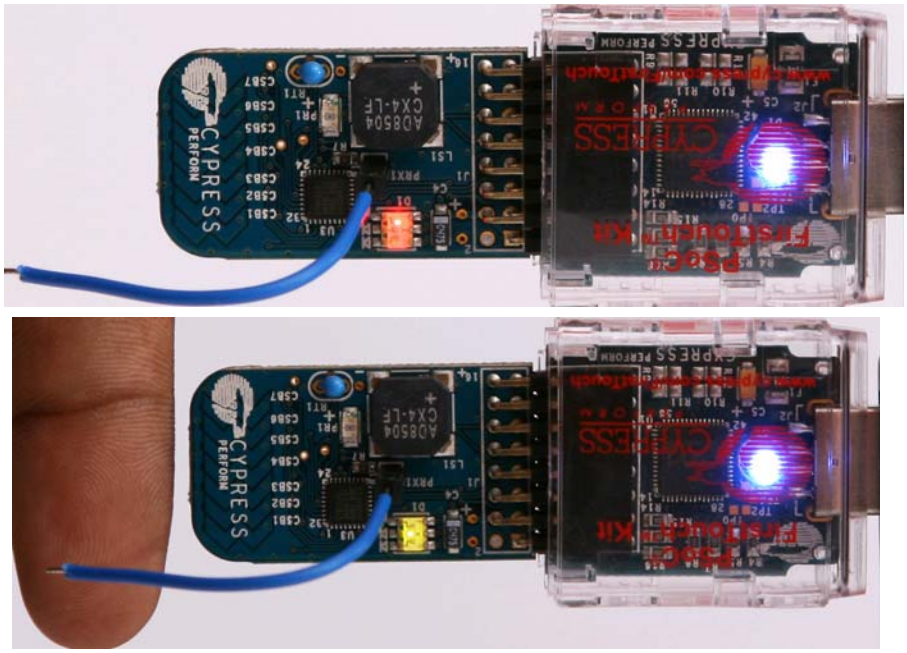

5.4 Multifunction Expansion Card Temperature Sensor

This code example demonstrates the temperature sensing, thermistor reading, and calibrating capabilities of the PSoC device. Depending upon the temperature range within which a particular temperature reading is recorded, different colored LEDs (red, green, and blue) are turned ON or OFF.

The code example contains following User Modules:

- **ADC10**: These modules convert analog input to digital form.The ADC module is used to obtain the digital values for the temperature.
- **LED**: LED is used to display the output based on the data from ADC.
- **EzI2Cs**: The EzI2Cs module configures PSoC on the MultiFunction board as I2C slave. The Slave data is available for acquisition using a bridge board that is configured as I2C Master.
- **Counter8**: This user module is used to control the buzzer output.

5.4.1 Device Configuration

The chip level view of the code example, after placing all the required user modules, is shown in Figure 5-41

Figure 5-41. Device Configuration of Temperature Sensor

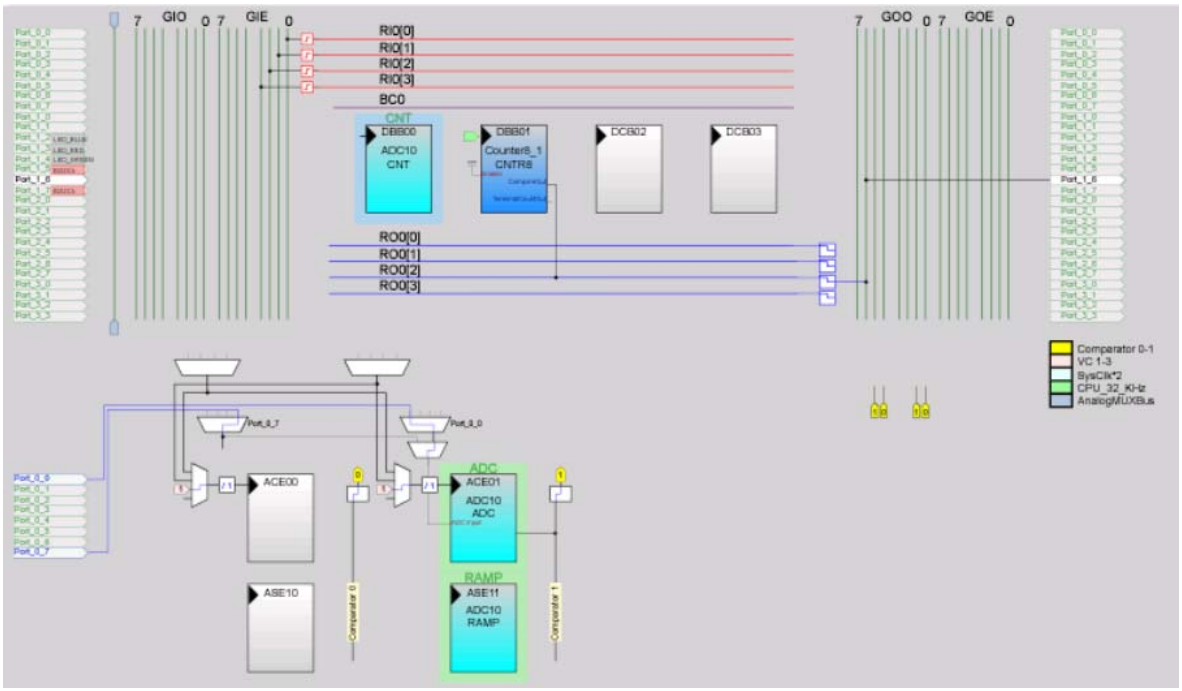

5.4.2 Firmware Architecture

5.4.2.1 Flowchart

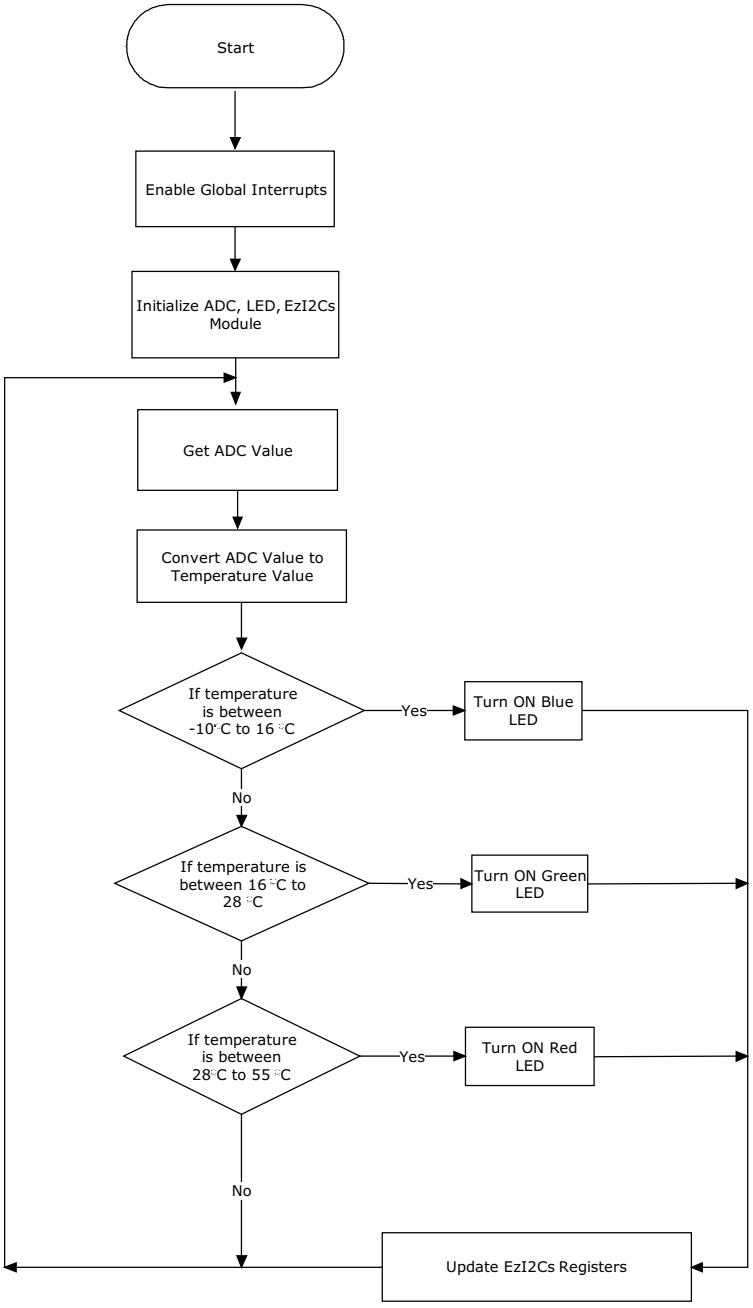

5.4.2.2 Verify Output

- The red LED is ON only if the temperature is between 28 °C and 55 °C
- The green LED is ON only if the temperature is between 16 °C and 28 °C
- The blue LED is ON only if the temperature is between 16 °C and –10 °C"

Figure 5-42. Temperature Reading and Updated LED Status

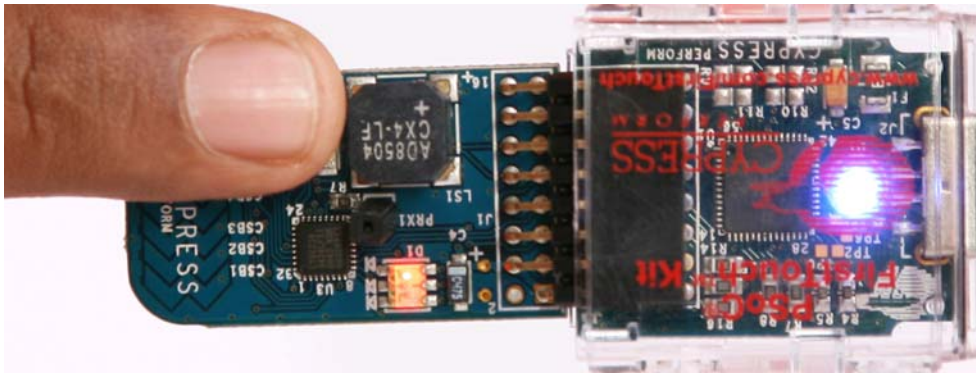

A. Appendix

The schematic board layouts and BOM are available on the CY3270-FTK kit CD or at this location: `<Install_directory>:\Cypress\CY3270-FTK\<version>\Hardware`.

A.1 Schematic

A.1.1 First Touch PC Bridge Schematic

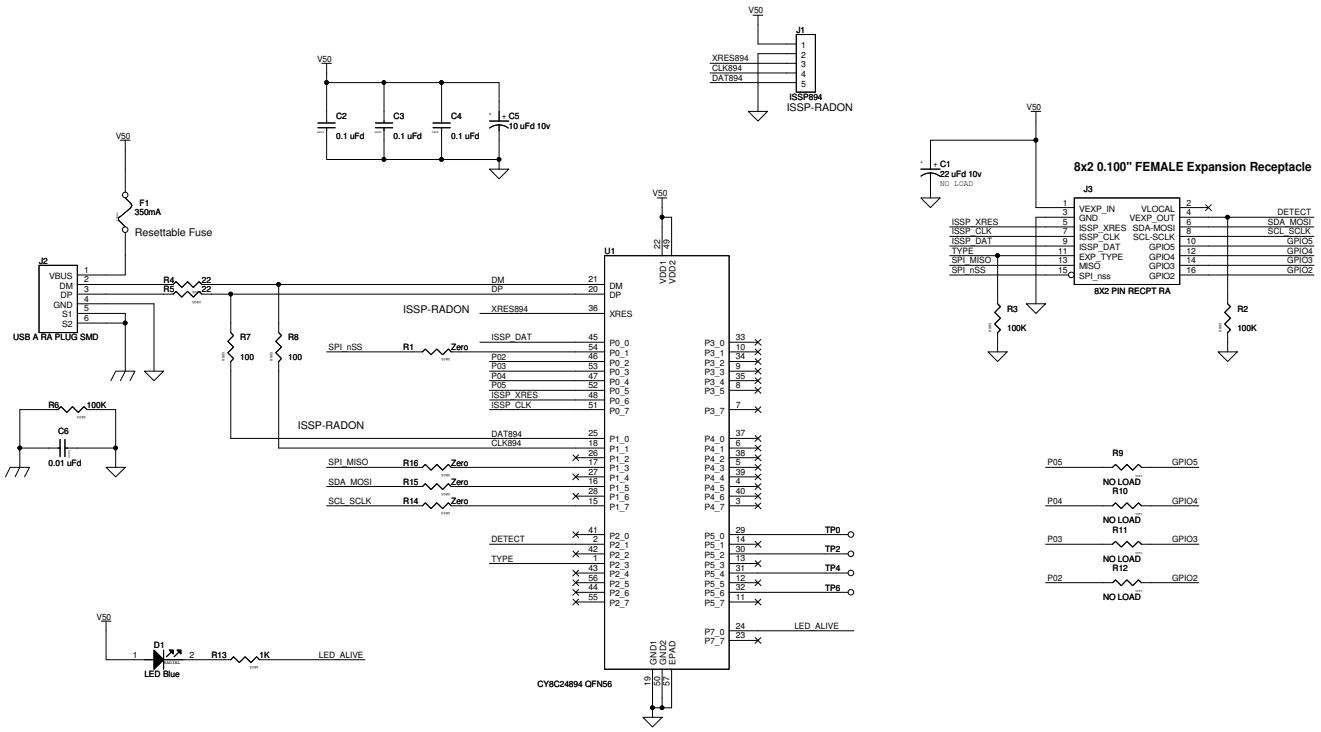

A.1.2 First Touch Multifunction Card Schematic

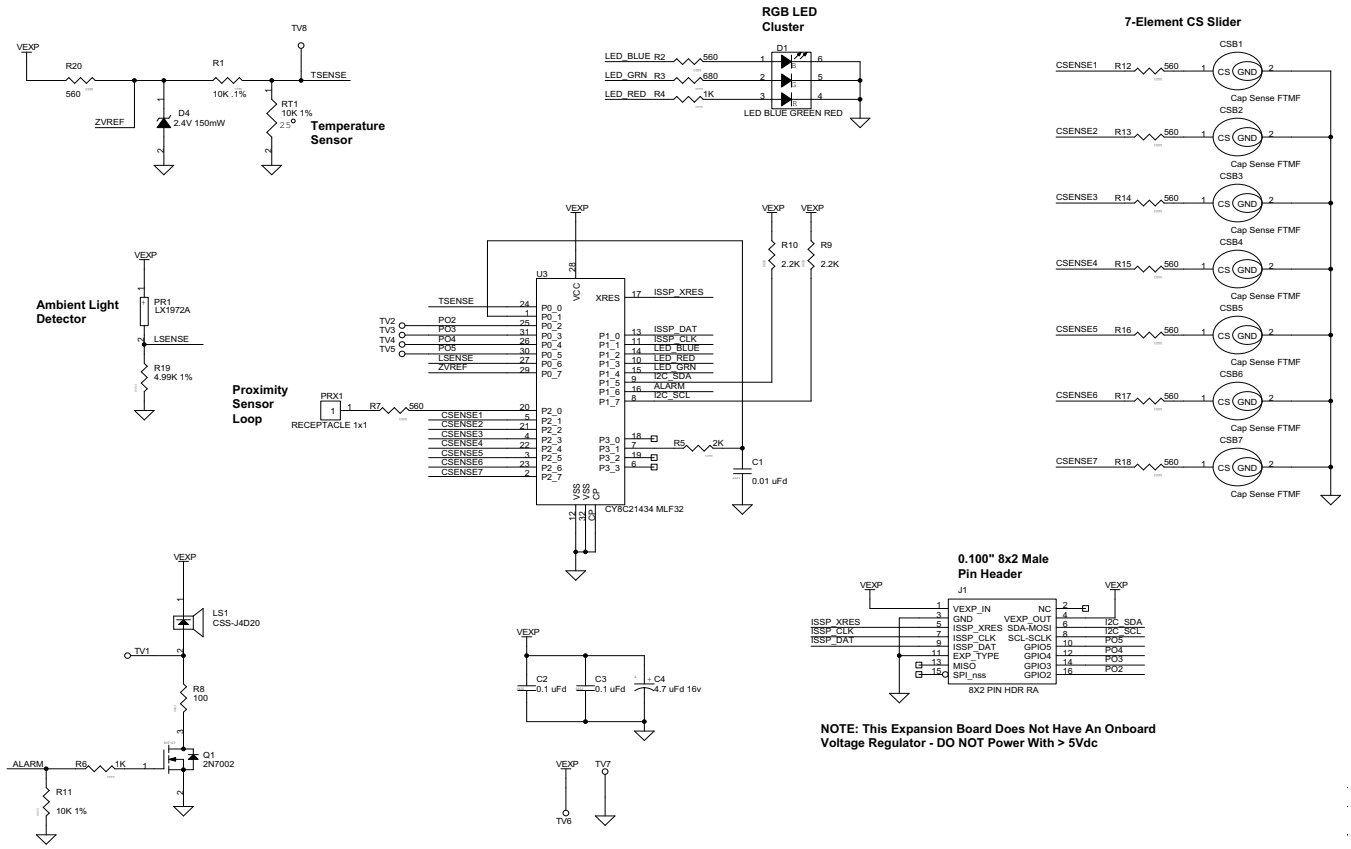

A.2 Board Layout

A.2.1 PDCR-9402 Primary side

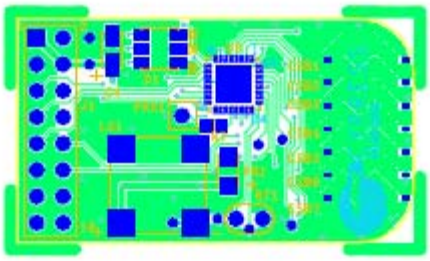

A.2.2 PDCR-9402 Secondary Side

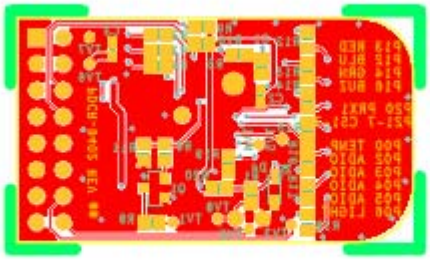

A.2.3 Assembly Drawing of First touch Multifunction Card (Primary side)

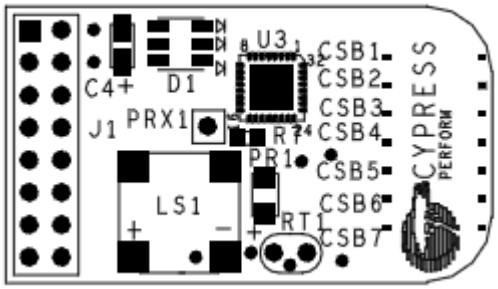

A.2.4 Assembly Drawing of First touch Multifunction Card (Secondary Side)

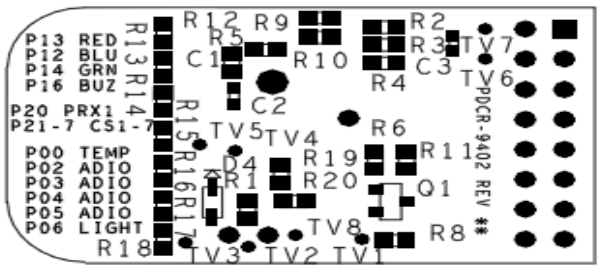

A.2.5 PDCR-9403 Primary Side

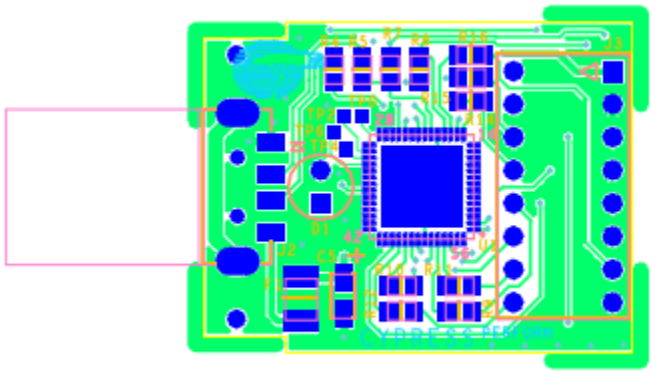

A.2.6 PDCR-9403 Secondary Side

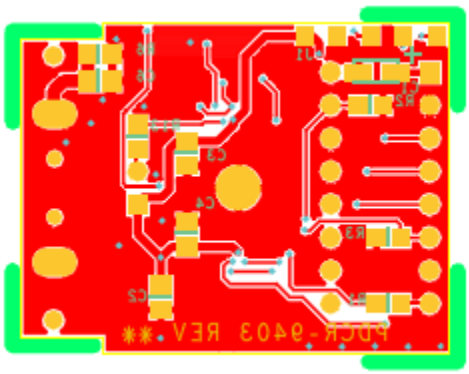

A.2.7 Assembly Drawing for FirstTouch PC Bridge

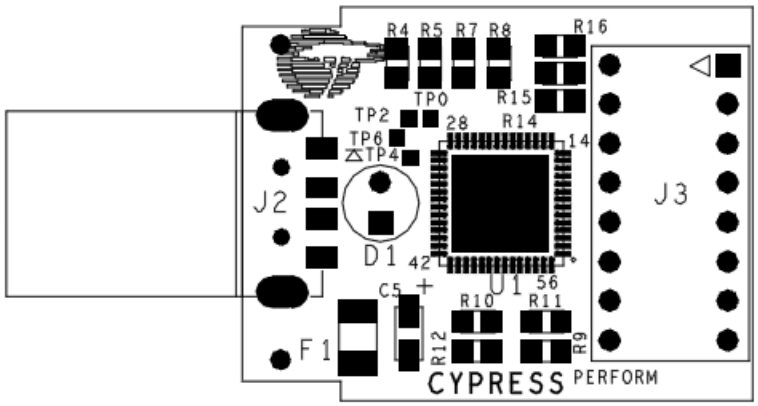

A.3 BOM

A.3.1 FirstTouch Multifunction Board

Item	Qty	Reference	Description	Manufacturer	Mfr Part Number
1	1	C1	CAP 10000 PF 16 V CERM X7R 0603	Panasonic	ECJ-1VB1C103K
2	2	C2,C3	CAP .10 UF 10 V CERAMIC X5R 040	Kemet	C0402C104K8PACTU
3	1	C4	CAP 4.7 UF 16 V Tantalum 3216	Nichicon	F931C475MAA
4	1	D1	LED RGB 3.2×3.6 MM CLR LENS SMD	Lumex Opto/ Components Inc	SML-LX3632SISUGSBC
5	1	D4	DIODE ZENER 2.4 V 150 MW S-MINI 2P	Panasonic - SSG	MAZ802400L
6	1	J1	CONN HEADER 16POS .100" R/A TIN	Molex/Waldom Electronics Corp	90122-0128
7	1	LS1	BUZZER MAGNETIC 8.5 MM 3-5 V SMD	CUI Inc	CSS-J4D20
8	1	PRX1	Low Profile Single Pin Socket Thru Hole	Samtec	CES-101-01-T-S
9	1	PR1	IC AMBIENT LIGHT DETECTOR 1206	Microsemi-IPG	LX1972IBC-TR
10	1	Q1	MOSFET N-CH 60V 115 MA SOT-23	Diodes Inc	2N7002-7-F
11	1	RT1	THERMISTOR NTC 10 KΩ 1% LEADED	BC Components	2381 640 55103
12	1	R1	RES CHIP 10.0 KΩ 1/16 W .1% 0603 SMD	Panasonic - ECG	ERA-3AEB103V
13	1	R11	RES CHIP 10.0 KΩ 1/16 W 1% 0603 SMD	Phycomp USA Inc	9C06031A1002FKHFT
14	1	R3	RES 680 Ω 1/10 W 5% 0603 SMD	Panasonic - ECG	ERJ-3GEYJ681V
15	2	R4,R6	RES 1.0 KΩ 1/16 W 5% 0603 SMD	Panasonic - ECG	ERJ-3GEYJ102V
16	1	R5	RES 2.0 KΩ 1/16W 5% 0603 SMD	Panasonic - ECG	ERJ-3GEYJ202V
17	1	R8	RES 100 Ω 1/16W 5% 0603 SMD	Panasonic - ECG	ERJ-3GEYJ101V
18	2	R10,R9	RES 2.2 KΩ 1/10W 5% 0603 SMD	Panasonic - ECG	ERJ-3GEYJ222V
19	1	R19	RES 4.99 KΩ 1/16W 1% 0603 SMD	Panasonic - ECG	ERJ-3EKF4991V
20	10	R2,R7,R12,R13,R14 ,R15, R16,R17,R18,R20	RES 560 Ω 1/10W 5% 0603 SMD	Panasonic - ECG	ERJ-3GEYJ561V
21	1	U3	IC PROGRAMMABLE SOC MLF32	Cypress Semiconductor	CY8C21434-24LFXI
22	1	PCB	PRINTED CIRCUIT BOARD	Cypress Semiconductor	PDCR-9402 Rev **
23	1	LABEL1	Serial Number		
24	1	LABEL2	PCA LABEL		121R-40200 Rev **

DO NOT INSTALL					
25	7	CSB1-CSB7	CapSense Touch Element FTMF	NA	NA
26	8	TV1,TV2,TV3,TV4,T V5,TV6, TV7,TV8	TEST VIA 40 HOLE 20 PLATED	NONE	

A.3.2 FirstTouch PC Bridge

Item	Qty	Reference	Description	Manufacturer	Mfr Part Number
1	3	C2,C3,C4	CAP .1 UF 50 V CERAMIC X7R 0805	Panasonic - ECG	ECJ-2YB1H104K
2	1	C5	CAP TANT LOWESR 10 UF 10 V 20% SMD	AVX Corporation	TPSA106M010R1800
3	1	C6	CAP 0.01 UF 50 V CERAMIC X7R 0805	Panasonic - ECG	ECJ-2VB1H103K
4	1	D1	LED 3 MM DUAL FLANGE BLUE CLEAR	LITE-ON INC	LTL1CHTBK3
5	1	F1	THERMISTOR PTC 6 V .35 A RESETTABL	Littelfuse Inc	1206L035YR
6	1	J2	CONN PLUG USB 4POS RT ANG SMD	Molex/Waldom Electronics Corp	48037-1000
7	1	J3	PC Board Connector, Dual Row, Right Angle 16 Circuits	Molex/Waldom Electronics Corp	90152-2116
8	4	R1,R14,R15,R16	RES 0.0 Ω 1/8W 5% 0805 SMD	Rohm	MCR10EZHJ000
9	3	R2,R3,R6	RES 100 KΩ 1/8W 5% 0805 SMD	Rohm	MCR10EZHJ104
10	2	R4,R5	RES 22 Ω 1/8W 5% 0805 SMD	Panasonic - ECG	ERJ-6GEYJ220V
11	2	R8,R7	RES 100 Ω 1/8W 5% 0805 SMD	Rohm	MCR10EZHJ101
12	1	R13	RES 1.0 KΩ 1/8W 5% 0805 SMD	Rohm	MCR10EZHJ102
13	1	U1	PSoC Mixed-Signal Array	Cypress Semiconductor	CY8C24894-24LFXI
14	1	PCB	PRINTED CIRCUIT BOARD	Cypress Semiconductor	PDCR-9403 Rev **
15	1	LABEL1	Serial Number		
16	1	LABEL2	PCA LABEL		121R-40300 Rev **
DO NOT INSTALL					
17	1	J1	HEADER 0.1" SQ 5-PIN SMD AU	NA	NA
18	4	R9,R10,R11,R12	RES NO LOAD 0805 SMD	NA	NA
19	4	TP2,TP4,TP6,TP0	NA	NA	NA
20	1	C1	CAPACITOR TANT 22 UF 10 V 20% SMD	Kemet	T491A226M010AS