PSoC and Interface

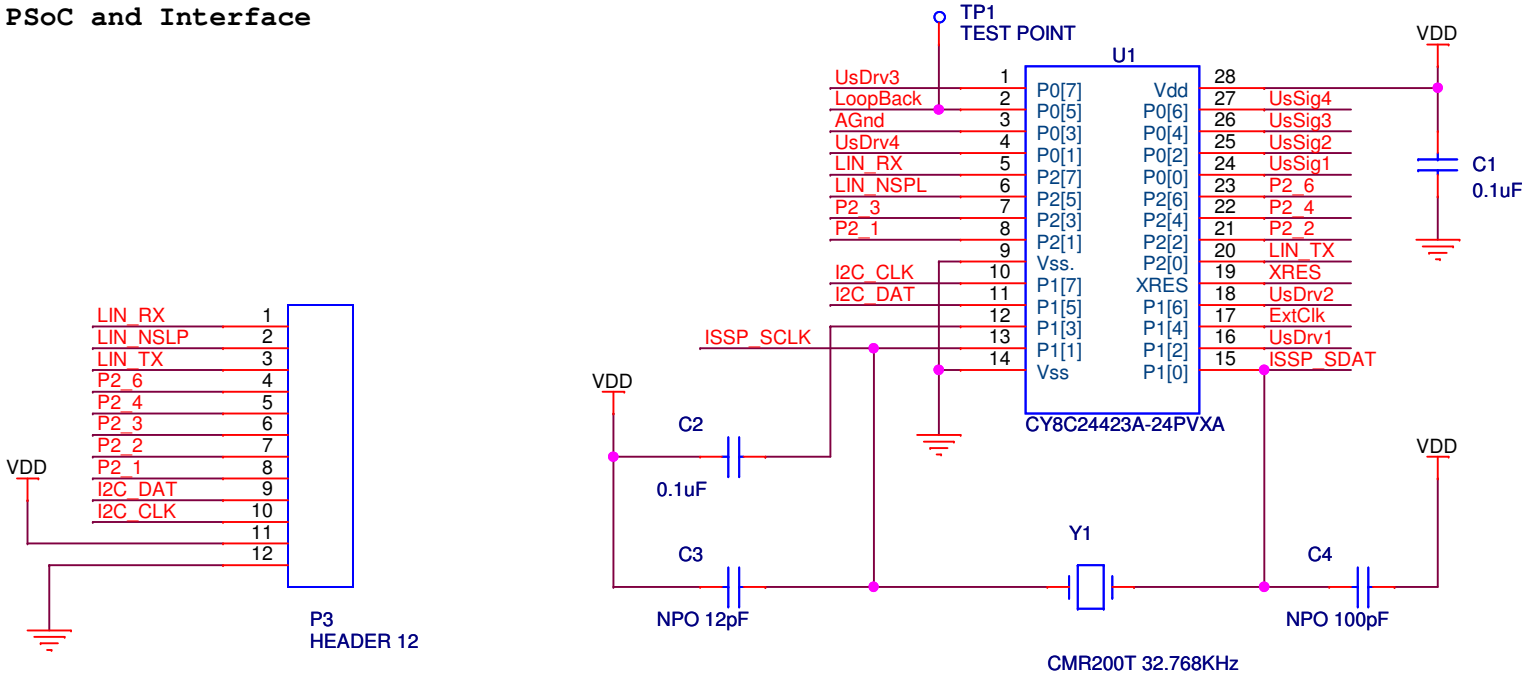

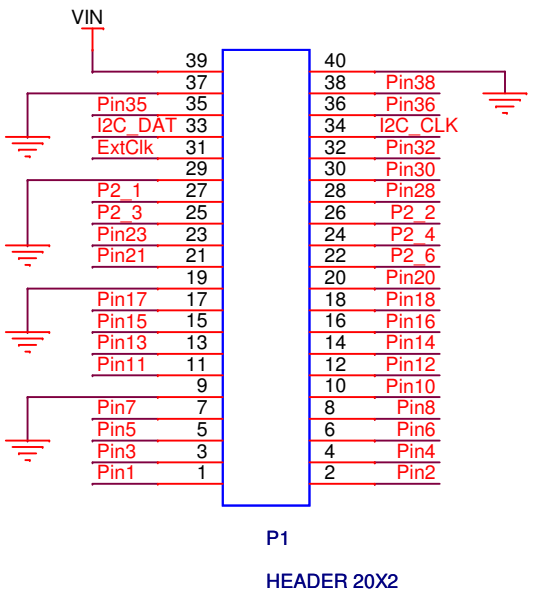

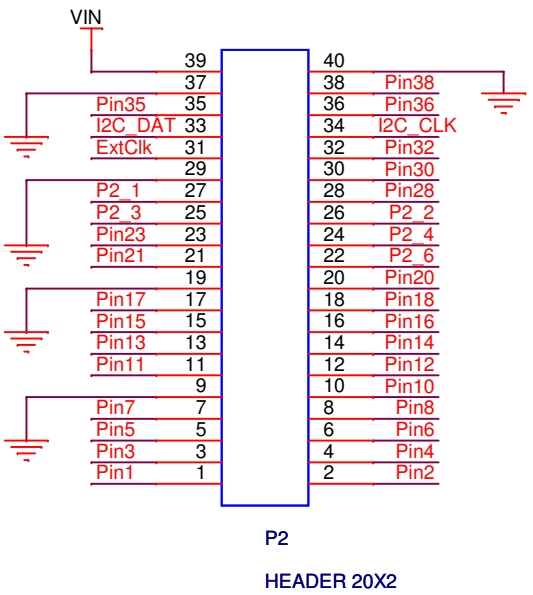

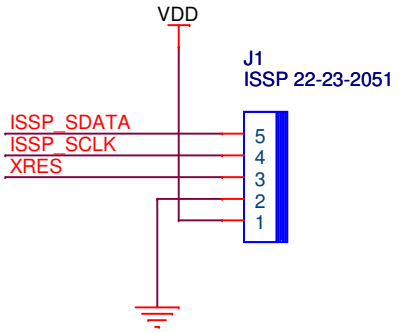

Title	PSoC and Interface	
Size A	Document Number	Rev **
Date: Sunday, June 10, 2012	Sheet 1 of 5	

Power Supply

This circuit is used to input an unregulated voltage and output a regulated 5V power rail that can supply up to 400mA.

Circuit Assumptions:
VDD = 5.0V (nominal)
VBAT = 12V (nominal)

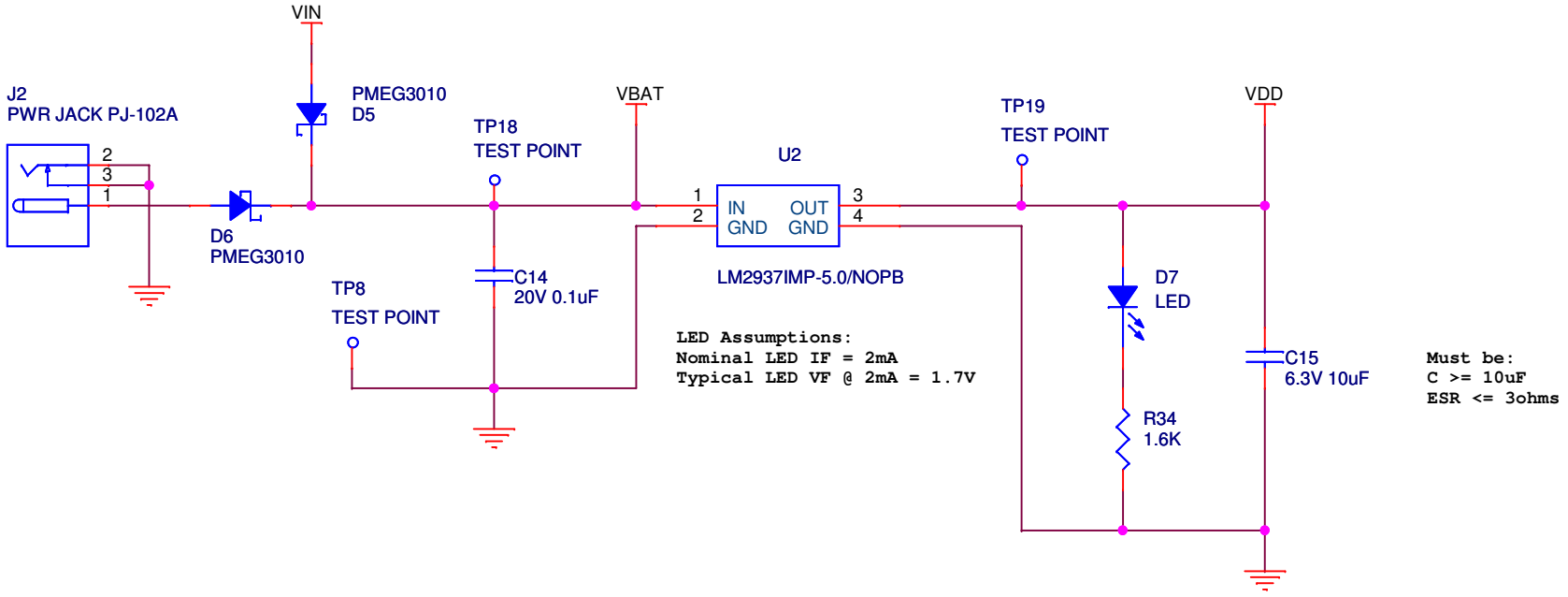

Title	PSU_LM2937_5V0_400mA	
Size A	Document Number	Rev **
Date: Sunday, June 10, 2012	Sheet 2 of 5	

Power Amplifier

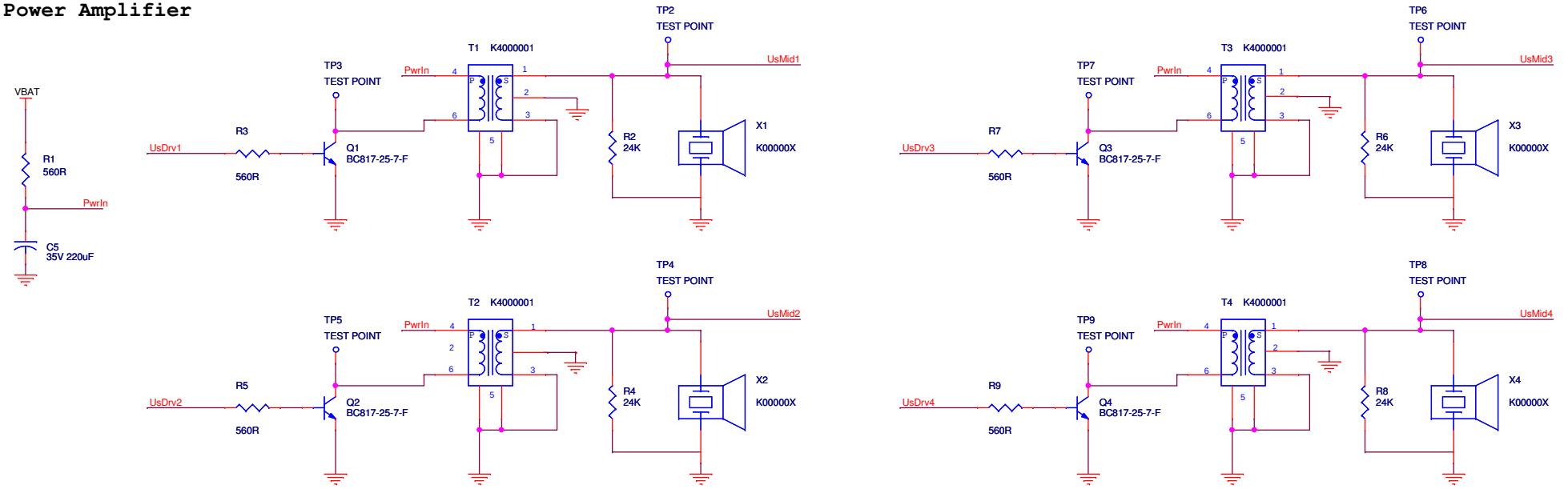

Title	Ultrasonic_Driver	
Size: Custom<Doc>	Document Number	Rev: **
Date: Sunday, June 10, 2012	Sheet 3 of 5	

Ultrasonic Signal Preconditioning Circuit

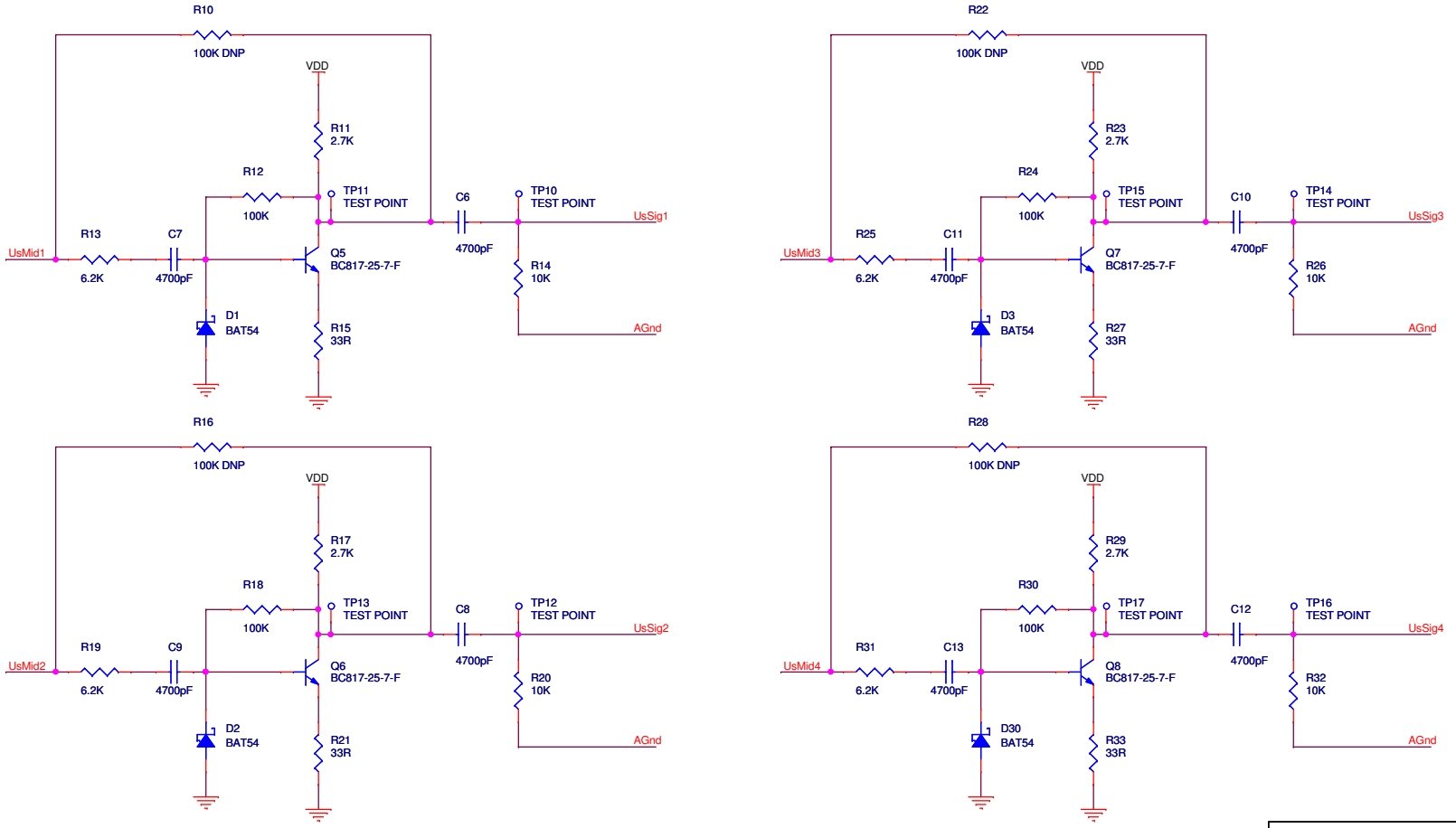

Title	Ultrasonic_In_Conditioner	
Size: Custom	Document Number	Rev: **
Date: Sunday, June 10, 2012	Sheet 4 of 5	

LIN Transceiver

Normally, the pull up resistor on the TX signal is deleted. The RX and TX pull ups can be integrated into an MCU and deleted here.

The RXD pin is an open-drain-low pin. Therefore, it needs some sort of external pull up resistor.

The NSLP pin has an internal pull down resistor.

The TXD pin has an internal pull down resistor.

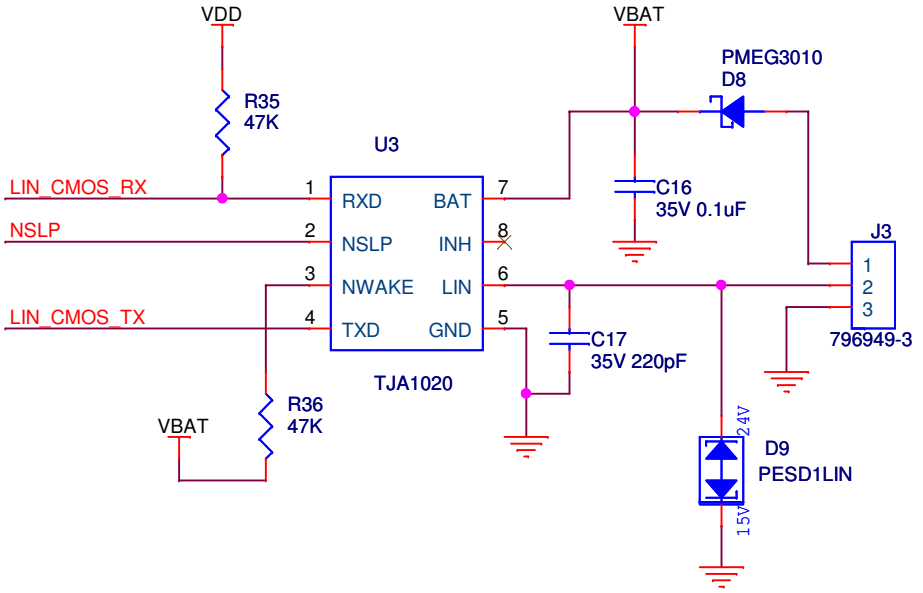

Title	NXP LIN Transceiver Circuit	
Size A	Document Number	Rev **
Date: Sunday, June 10, 2012	Sheet 5 of 5	