AN76458

PSoC® 5LP High-Voltage (120-240 VAC) Powerline Communication Solution

Author: Jeffrey Hushley

Associated Part Family: CY8C56xx/CY8C58xx

Associated Project: Yes

Related Application Notes: AN77759 - Getting Started with PSoC® 5LP
AN58825 - PLC - Powerline Communication Debugging Tools

To get the latest version of this application note, or the associated project file, please visit http://www.cypress.com/go/AN76458.

AN76458 describes how to develop a complete powerline communication system with the PSoC 5LP family of devices. Attached to the application note is a code example of a 2400-bps FSK modem with the Cypress powerline network protocol. Also attached are design files of a board that interfaces the PSoC 5LP device to a high-voltage (120-240 VAC) powerline.

Contents

1 Introduction....1
2 PLC on PSoC 5LP Architecture....3
2.1 FSK Modulator....4
2.2 FSK Demodulator....5
2.3 Network Protocol....5
3 Application Programming Interface (API)....8
3.1 Steps to Transmit a Packet....8
3.2 Steps to Receive a Packet....8
4 Host Interface (Optional)....9
4.1 I2C Interface....9
4.2 UART and SPI....10
5 External Hardware....11
5.1 PLC Device....13
5.2 Transmit Filter....14
5.3 Transmit Amplification....17
5.4 Receive Filter....20
5.5 Coupling Circuit....21
6 Performance....24
6.1 Transmitter Conducted Emissions....24
6.2 Transmission with Heavy Loads....25
6.3 Receiver Input Sensitivity....26
6.4 Receiver Noise Immunity....30
7 How to Debug PLC....35
7.1 Causes of Poor Performance....35
7.2 Methods to Improve Performance....35
8 Code Example Evaluation....36
8.1 Standalone Demo Evaluation....37
8.2 External Host Interface Evaluation....41
9 Summary....43
A Appendix A: PLC Configuration Array....44
B Appendix B: PSoC 5LP PLC Hardware User's Guide....50
B.1 Board Component Description....51
Document History....57
Worldwide Sales and Design Support....58

1 Introduction

Powerline communication (PLC) provides a mechanism to exchange data over existing powerlines. The primary benefit of PLC over most other communication methods is that there are no infrastructure costs (i.e., no new wires) to install a PLC-enabled system.

There are generally two types of PLC systems: high-bandwidth (video, audio, and so on) and low-bandwidth (command and control). This application note describes how to implement a low-bandwidth, half-duplex PLC solution with the PSoC 5LP family of devices. Figure 1 shows a PLC system diagram. The following sections describe the dark grey boxes in detail.

Figure 1. PLC System Diagram

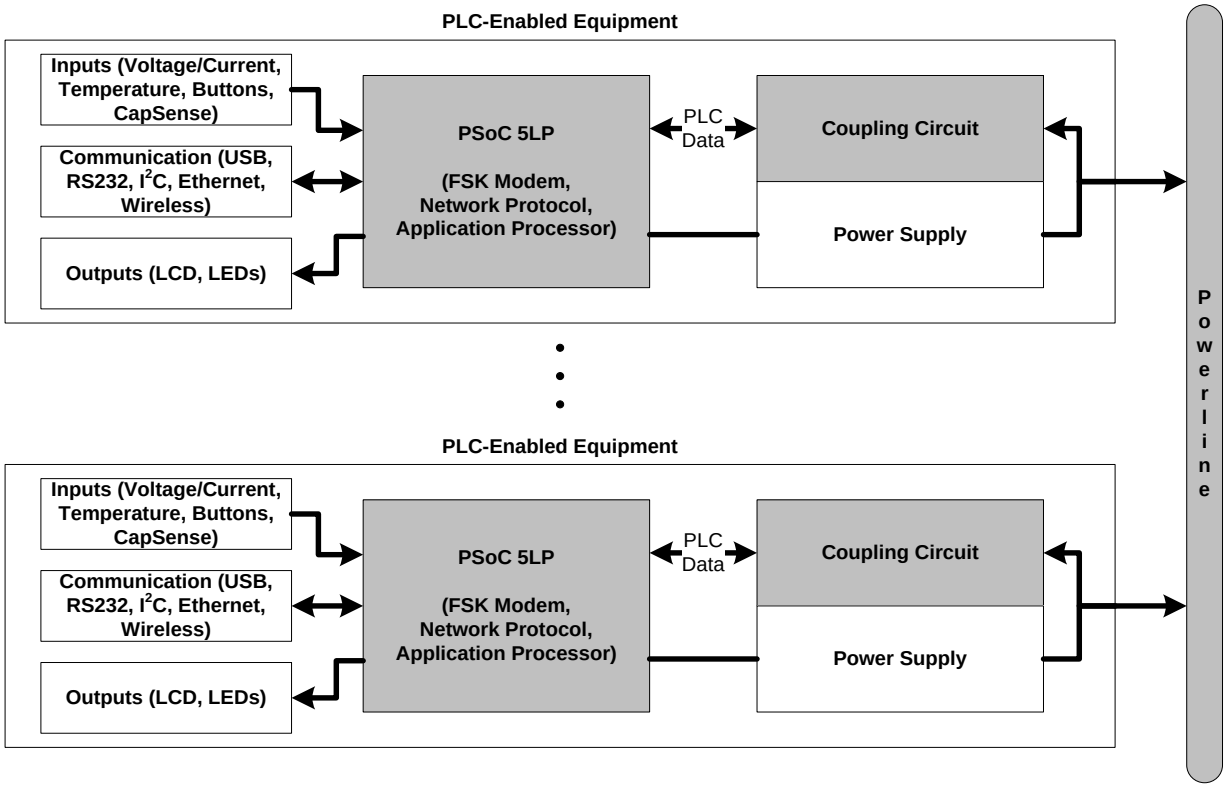

More specifically, this application note describes how to:

- Use the FSK Modulator and FSK Demodulator components, which reliably transmit and receive data over the powerline, even in the presence of noise and heavy loading on the line.
- Use the Network Protocol component, which avoids packet collisions, addresses individual nodes or groups of nodes, corrects single-bit errors (FEC encoding), and detects packet errors (CRC and acknowledgments).
- Design hardware that interfaces the PSoC 5LP device to the powerline.
- Test the performance of the PLC system and relate it to real-world system performance.

Cypress designed the PLC solution to deliver the best performance for the majority of powerline loading and noise conditions. Although the Cypress PLC solution has excellent input sensitivity, (<45 dBµV) and SNR tolerance (<9 dB in-band), there are situations where the conditions on the line cause communications to degrade. As a result, the best application for this technology is in more controlled power environments. In environments that generate significant noise (such as large industrial systems and large systems of computers) and environments that attenuate the signal (multiple phases), it is possible that communications may not work as well as desired. For a more in-depth analysis, see AN58825 - PLC - Powerline Communication Debugging Tools.

This application note also includes:

- A code example with a 2400 bps FSK modem, network protocol (compatible with the CY8CPLC20 PSoC 1 solution), and an application that monitors the communication statistics. It also has a host interface (compatible with the PLC Control Panel GUI) to evaluate the system with an external host.
- Hardware design files of a test board, including the schematics, layout, and BOM, that can interface the PSoC 5LP device to a high-voltage (120-240 VAC) powerline.

For first time users of PSoC 5LP, Cypress recommends that you read the application note AN77759 - Getting Started with PSoC® 5LP. To evaluate the PLC solution directly, go to the Code Example Evaluation section.

2 PLC on PSoC 5LP Architecture

Figure 2 shows the architecture of the PLC on PSoC 5LP solution. The large light grey block represents the entire PSoC 5LP device. Outside of this are the external components required to filter the PLC signal and to couple it to the powerline. This section focuses on the PSoC 5LP device. The External Hardware section describes the hardware interface.

Figure 2. PLC on PSoC 5LP Architecture Diagram

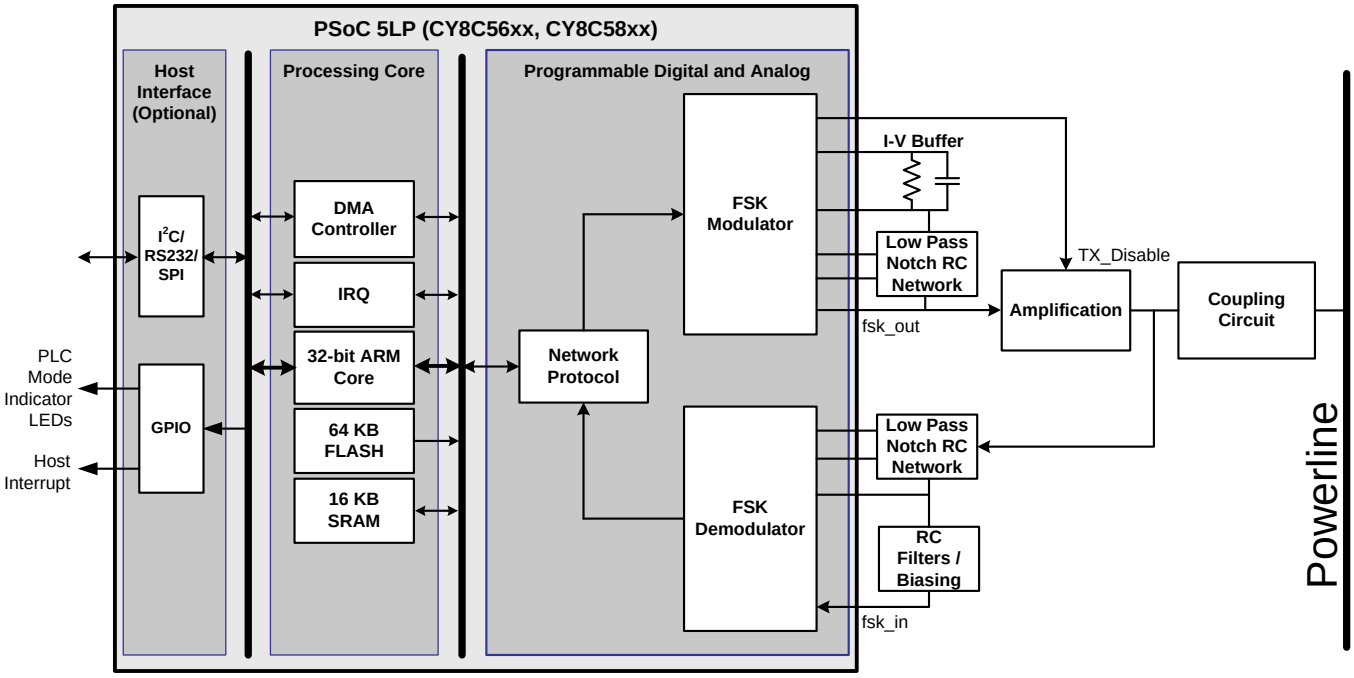

From left to right, the host interface is an optional section to connect the PSoC 5LP device to an external host and to indicate the PLC status. In the code example, there are three available interfaces (I^2C, RS232, and SPI) to communicate with an external host. More detail on the code example host interface appears in the Host Interface (Optional) section.

The processing core uses the 32-bit ARM core to run the network protocol and host interface as well as to configure the FSK modem. The DMA controller connects many of the components of the modem without using any CPU bandwidth.

There are three components that together perform powerline communication:

- FSK Modulator
- FSK Demodulator
- Network Protocol

These components are available in the attached code example. This section provides a summary of each of these components. More details are in the component data sheets, which can be opened in the code example. The components are in the Cy_ref tab of the Component Catalog window.

Note The FSK Demodulator component uses the Digital Filter Block (DFB) and SAR ADC components. Therefore, it can only be implemented on the CY8C56xx or CY8C58xx series of devices.

2.1 FSK Modulator

The FSK Modulator component converts the serial bit stream from the Network Protocol's UART into sine waves at two different frequencies (i.e. FSK modulation). Figure 3 shows a basic example of how a change in the serial input causes a change in the frequency of the output sine wave. The FSK Modulator also enables the external transmit amplification circuit to drive the FSK signal over the powerline. When not transmitting, it disables the transmit amplification circuit so that the circuit doesn't load the line and attenuate the received signal.

Figure 3. FSK Modulation Example

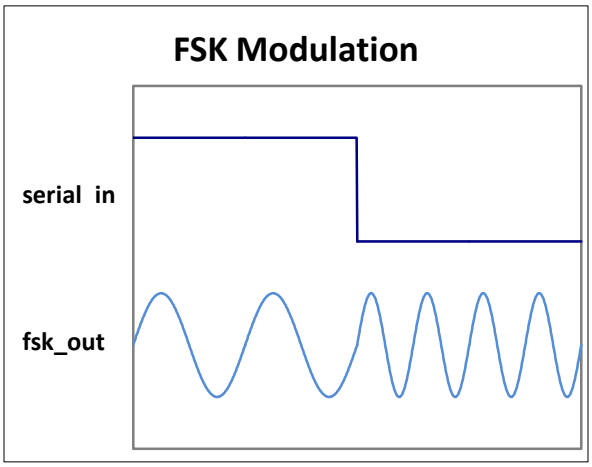

The Configure dialog box (shown in Figure 4) configures the FSK Modulator. The value of FSK_Center_Frequency should match the FSK Demodulator's FSK_Center_Frequency and the Network Protocol's Frequency_Master. If the system needs to meet FCC part 15 and/or CENELEC EN50065-1 compliance standards, then set the FSK_Wave_Type parameter to Sine_Wave. If the system does not need to meet any of these standards, then to save resources and power, set the FSK_Wave_Type to Square_Wave. The attached code example uses the Sine_Wave value. The component data sheet describes each of the parameters in more detail. In the attached code example, the other parameters have the default values.

Figure 4. Configure FSK Modulator Dialog

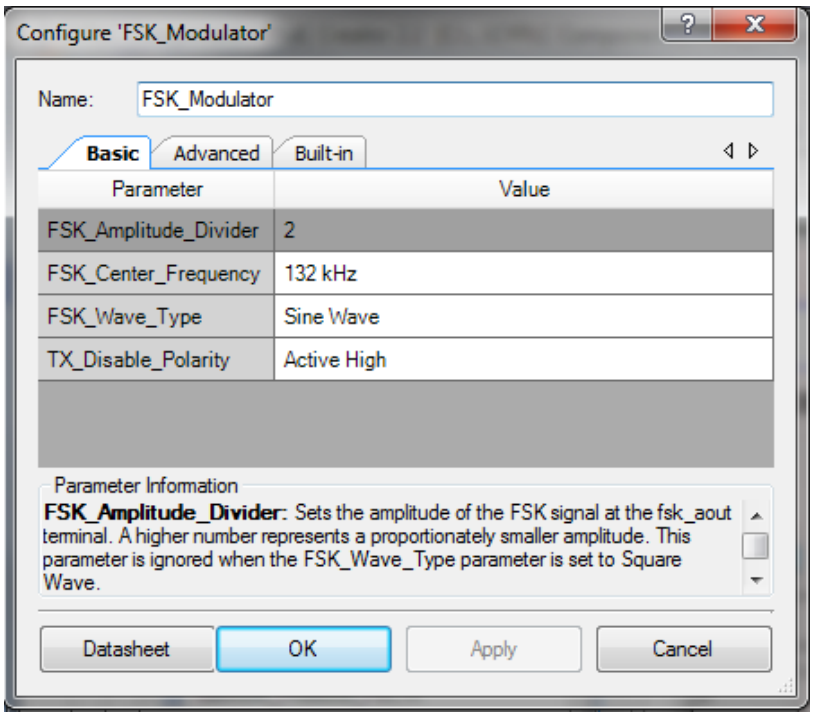

2.2 FSK Demodulator

The FSK Demodulator component filters out any out-of-band noise from the powerline and then converts the FSK signal (sine waves) into the serial bit stream. The Network Protocol's UART receives this bit stream. The FSK Demodulator also tracks the maximum amplitude (in dB) of the filtered input signal. The Network Protocol uses that information for band-in-use detection and frequency hopping.

The Configure dialog box (shown in Figure 5) configures the FSK Demodulator. The Receive_Filter parameter is Enabled so that it filters out any out-of-band noise. It does not depend on whether the system needs to meet compliance standards. It can be disabled if the powerline has low noise such that the signal-noise-ratio (SNR) is >10 dB across all noise frequencies above 135 kHz (see the Receiver Noise Immunity section for more information on SNR). The Receive_Gain parameter sets the amount of gain applied to the input signal by the FSK Demodulator's programmable gain amplifier (PGA). The value is 1 so that the gain can be changed at run-time. A higher gain improves the input sensitivity, but degrades the noise immunity because it amplifies the noise as well the signal (see the section for the quantitative differences). If the Receive_Gain is None, the FSK Demodulator does not use the PGA, which saves resources. The attached code example uses the default parameter values.

Figure 5. Configure FSK Demodulator Dialog

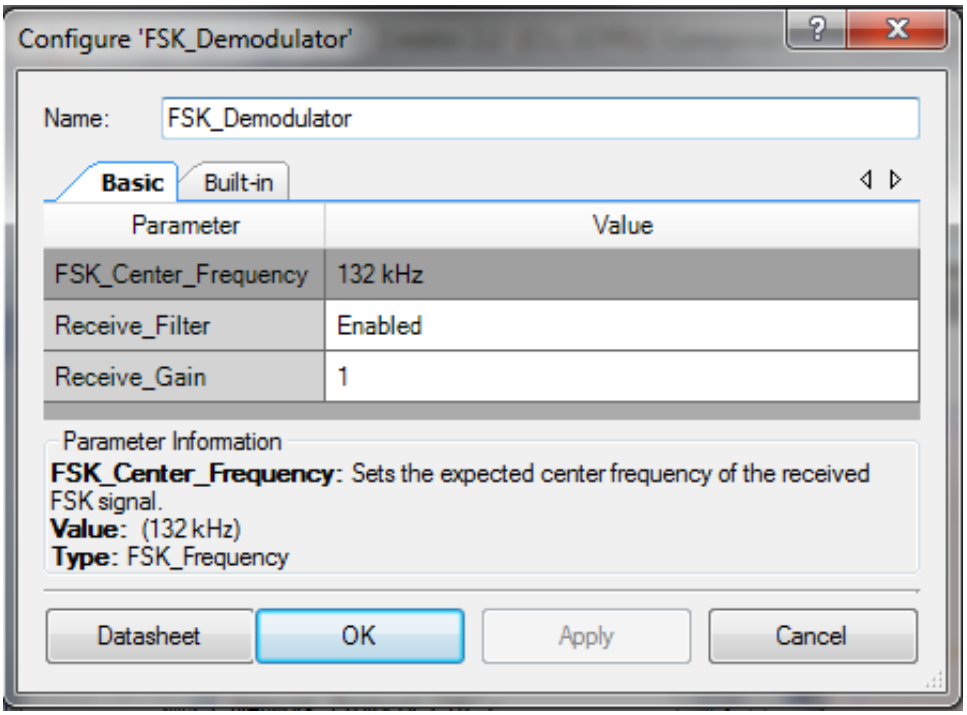

2.3 Network Protocol

The purpose of the Network Protocol is to ensure that the correct data is sent to the intended destination, in a timely manner. Since a powerline is a bus, it is also important to prevent data collisions. The Network Protocol meets these requirements with the following features:

- Transmits and receives data packets at 600 - 2400 bps
- 8-bit CRC insertion and verification to detect packet errors
- FEC Encoding to detect and correct single-bit errors
- Acknowledgments to verify successful transmission
- Multiple addressing modes: 8-bit (logical), 16-bit (extended logical), 64-bit (physical), or group

- Band-in-use (BIU) detection to avoid packet collisions
- Frequency hopping to automatically switch to the FSK center frequency of the incoming signal

Because the communication is half-duplex, the Network Protocol co-ordinates when to transmit and when to receive data by starting and stopping the FSK Modulator and FSK Demodulator components. Figure 6 shows the basic flow of the Network Protocol. When the application wants to transmit data, the Network Protocol encapsulates the data in a packet, which also contains a preamble, source and destination addresses, payload length, and the calculated CRC. Before transmitting, it checks if the line is free by measuring the amplitude in the communication frequency band (via the FSK Demodulator). This is referred to as band-in-use (BIU) detection. If the line is free, it starts the FSK Modulator so that it can transmit the data on the powerline. The Network Protocol component contains a UART, which acts as the interface between the 32-bit ARM core and the modem. It converts the individual bytes of the packet into a serial bit stream for modulation by the FSK Modulator. After the UART transmits the last byte of the packet, the Network Protocol stops the FSK Modulator and starts the FSK Demodulator so that it can receive data. If the application enabled acknowledgments, then the Network Protocol waits to receive the acknowledgment. It sets a status flag when it receives the acknowledgment or when the acknowledgment timer expires.

In the receive direction, the UART converts the serial bit stream from the FSK Demodulator into the bytes of the packet. The Network Protocol continuously checks if the UART has received a new byte and checks if that byte is part of a packet that has a matching address and valid CRC. When it receives a valid packet, it sets a status flag so that the application can read the data. If the device that transmitted the packet expects an acknowledgment, then the Network Protocol will transmit back an acknowledgment.

Figure 6. Network Protocol Flow Diagram

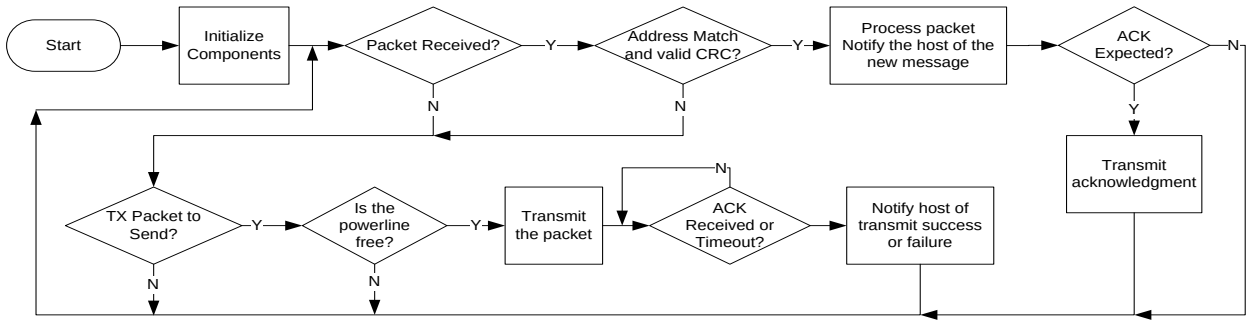

The Configure dialog box (shown in Figure 7) configures the Network Protocol. The maximum value for the Baud_Rate parameter is 2400 bps in order to have a high success rate with the available FSK Modulation frequencies. When the FEC_Encoding parameter is Enabled, the Network Protocol encodes each 4-bit nibble of the packet into an 8-bit byte. If there is a single bit error in any of the bytes that are received on the other end of the line, the receiver's Network Protocol will detect and correct the erroneous bit. Therefore, it improves the communication success rate at the expense of half the throughput of the original data. The component data sheet describes all of the parameters in more detail. The attached code example uses the default parameter values.

Figure 7. Configure Network Protocol Dialog

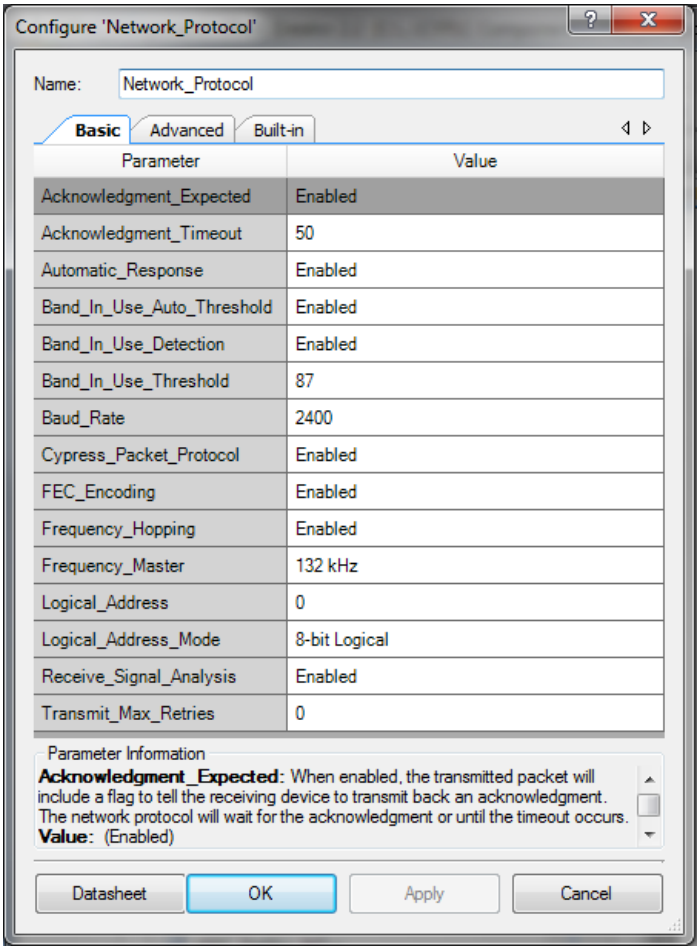

2.3.1 Frequency Hopping

When frequency hopping is enabled and the application is not transmitting, the Network Protocol sets the FSK Demodulator's center frequency to match the frequency of the received FSK signal (when present). When frequency hopping is enabled and the application is transmitting packets, the application selects the FSK center frequency that yields the better success rate. The code for selecting the FSK center frequency is in PLC_demo.c, instead of the Network Protocol. The code is in this file because the reason for selecting the FSK center frequency is application dependent.

For this code example, when frequency hopping is enabled for the transmitter, it uses acknowledgments to determine if it should hop to the other frequency. The success rate is the number of acknowledgments divided by the number of transmitted packets. The transmitter switches frequencies when any of the following is true:

1. The current frequency has a lower success rate than the other frequency
2. The current frequency is not performing up to the preferred success rate and the other frequency hasn't been tested recently.
3. The current frequency is not performing up to the minimum required success rate

The preferred success rate and minimum success rate are defined as the number of expected acknowledgments received per 1000 packets transmitted. The two constants are user-configurable and defined in PLC_demo.h as:

#define PREFERRED_SUCCESS_RATE_PER_1K 900

#define MIN_SUCCESS_RATE_PER_1K 50

For case 2, if the success rate of the active frequency is not meeting the preferred success rate, the transmitter will try the other frequency to see if it has a better success rate. However, if that other frequency has a worse success rate, the transmitter will switch back to the original frequency. To minimize the packets wasted when switching frequencies, the packet count threshold for switching frequencies is doubled each time the other frequency yields worse results. The application resets the count threshold when the other frequency has a better success rate. The minimum and maximum count thresholds are defined in PLC_demo.c as:

#define MIN_HOP_THRESHOLD 5

#define MAX_HOP_THRESHOLD 1000

Additionally, if the transmitting board gets a failure (no acknowledgment), then on the next transmission, it holds the line low (no FSK signal, but the amplifier is on), which presents a low impedance on the powerline. This enables the receiver to drop its noise floor so that it has a better chance of "seeing" the PLC signal when it is transmitted. When the transmitter switches frequencies, the receiver may still be locked on the old frequency. Therefore, the transmitter holds the line low for a longer period than the receiver's lock time so that the receiver has time to unlock from the old frequency and be available to lock on to the new frequency. The line is held low by calling Network_Protocol_EnableTxLineLoading before transmitting the data.

3 Application Programming Interface (API)

The APIs for the Network Protocol, FSK Modulator, and FSK Demodulator components are described in their respective data sheets, which can be opened in the code example. This section describes the easiest way to transmit and receive packets with the APIs of these components.

3.1 Steps to Transmit a Packet

To transmit a packet, follow these steps:

1. Call FSK_Modulator_Start to initialize the FSK Modulator. To stop the modulator from transmitting data, call FSK_Modulator_Stop.
2. Call Network_Protocol_Start to initialize the protocol and start the UART.
3. Call Network_Protocol_SetDestinationAddress to set the destination address type and the destination address
4. Call Network_Protocol_LoadTxData to set the command ID, data payload, and payload length. This will initiate transmission of the packet. To send normal data, the command ID is CMD_DATA (0x09). Also, the application can use custom user-defined command IDs (0x30 to 0xFF) to indicate the type of data in the packet.
5. Call Network_Protocol_Poll and Network_Protocol_ReadTxStatus at least once every millisecond, until Network_Protocol_ReadTxStatus returns Network_Protocol_TX_COMPLETE, Network_Protocol_ACK_TIMEOUT, or Network_Protocol_BIU_TIMEOUT. The Network_Protocol_ReadTxStatus function automatically clears the transmit status each time that it is called.

3.2 Steps to Receive a Packet

To receive a packet, follow these steps:

1. Call FSK_Demodulator_Start to initialize the FSK Demodulator.
2. Call Network_Protocol_Start to initialize the protocol and start the UART.
3. Call Network_Protocol_Poll and Network_Protocol_ReadRxStatus at least once every millisecond, until Network_Protocol_ReadRxStatus returns Network_Protocol_RX_COMPLETE or Network_Protocol_RX_OVERFLOW. The Network_Protocol_ReadRxStatus function automatically clears the receive status each time that it is called.
4. Call Network_Protocol_GetRxSourceAddressType and Network_Protocol_GetRxSourceAddress to get the source address of the device that transmitted the packet
5. Call Network_Protocol_GetRxCommandID to get the command ID of the packet
6. Call Network_Protocol_GetRxDataLength to get the length of the data payload
7. Call Network_Protocol_GetRxData to get the data payload

In *PLC_demo.c* of the attached code example, the PLC_Demo_Process function processes the transmitted and received messages. The main function in *main.c* calls the Network_Protocol_Poll function.

4 Host Interface (Optional)

The attached code example includes an option to have an external host that configures the PLC system. Since PSoC 5LP has its own processor, it is typically not necessary to have a separate processor in the end system. This host interface is available for initial prototyping with legacy systems or with the Cypress Powerline Communication Control Panel GUI.

The code example supports the following interfaces:

- I^2C
- UART (RS232)
- SPI

The *bridgeLayer.c* file contains all of the functions for managing these interfaces. To enable one of these interfaces, set the HOST_INTERFACE parameter in the *bridgeLayer.h* file.

The host interface code uses a memory map architecture to control the PLC components. The PLC_Config array contains the information for configuring the component's parameters (for example, band-in-use threshold, destination address, etc.) and for loading/retrieving the transmitted/received data. Appendix A: PLC Configuration Array describes the contents of the PLC_Config array.

4.1 I2C Interface

The I^2C interface uses the EZI2C Slave component, which supports the memory map architecture represented by the PLC_Config array. The I^2C interface is compatible with the Cypress PLC Control Panel GUI. You can download the PLC Control Panel GUI here.

4.1.1 I2C Configuration

The EZI2C Slave component supports up to 400 kbps data rates. The EZI2C_1_SetAddress1(uint8) function sets the I^2C address. The code example sets the I^2C address to 0x01 by default. The EZI2C_1_SetBuffer1(uint8, uint8, uint8 *) function sets the I^2C buffer to point to the PLC_Config array.

4.1.2 I2C Interface Write Packet Structure

The I^2C interface follows the packet structure defined by the I^2C specification. Table 1 shows the write packet. The master always sends the entire packet. The first byte is 0x02, because the I^2C address is shifted left by one.

Table 1. I^2C Write Packet

	7	6	5	4	3	2	1	0
Byte 0	I^2C Address (0b0000001)							0
Byte 1	Array Offset							
Byte 2+	Data from host to PLC_Config (Optional)							

4.1.3 I^2C Interface Read Packet Structure

The I^2C interface follows the packet structure defined by the I^2C specification. Table 2 shows the read packet. The master sends the first byte with '1' in the LSb to indicate that it wants to read. The offset to read from should be previously set by a write packet with that offset. The master will continue to generate a clock to read the bytes starting from that offset.

Table 2. I2C Read Packet

	7	6	5	4	3	2	1	0
Byte 0	I²C Address (0b0000001)							1
Byte 1+	Data from PLC_Config to Host							

4.1.4 I2C Application

The EZI2C Slave ISRs that are included in the component's source files automatically process the I²C write and read messages. To start this host interface, in *bridgeLayer.h*, set the HOST_INTERFACE parameter to HOST_I2C. Then, in the application code, call the BridgeLayer_Init function. Then, call the BridgeLayer_Poll function after every call of Protocol_Poll. This synchronizes the host with the protocol, so that it is compatible with the PLC Control Panel GUI.

4.1.5 I2C Host Example

An example algorithm of a host that tells the PLC device (I²C address 0x01) to send a one-byte PLC message is:

1. Send {0x02, 0x06, 0x81}, which writes the value 0x81 to PLC_Config[0x06].
2. To read the status of the transmission, send {0x03, 0x69}, which reads from PLC_Config[0x69].
3. If the received byte contains an event update of the transmission, it is done. Otherwise, repeat step 2.

Note: The I²C address is shifted left by one bit.

4.1.6 I2C Hardware Connection

Connect the SCL line to pin P12[0] and SDA to pin P12[1]. Each I²C line should have a pull-up resistor with a value between 2.4 kΩ and 7.5 kΩ.

4.2 UART and SPI

The UART and SPI interfaces use the same packet structure and application to manage the exchange of messages with the host. The host always initiates communication. To write data, the host must send a write packet. To read data, the host must send a read packet and then wait for the PSoC 5LP device to reply with a read response packet. Each byte of a write or read packet is processed only when the application calls the BridgeLayer_Poll function. Therefore, the application should call this function often enough that the 4-byte UART/SPI FIFO does not overflow.

4.2.1 UART/SPI Interface Host Write Packet Structure

When the host wants to write data to the PLC_Config array, it sets the MSb of the first byte to '0' to indicate a write. The remaining seven bits indicate how many bytes to write to the array. The next byte indicates the starting offset of the PLC_Config. The subsequent bytes contain the data itself.

Table 3. UART/SPI Write Packet

	7	6	5	4	3	2	1	0
Byte 0	0	Length						
Byte 1	Array Offset							
Byte 2+	Data from the Host to PLC_Config							

4.2.2 UART/SPI Interface Host Read Packet Structure

When the host starts to read data from the PLC_Config array, it sets the MSb of the first byte to '1' to indicate a read. Then, the remaining seven bits indicate how many bytes to read from the array. The next byte indicates the starting offset to read from the array.

Table 4. UART/SPI Write Packet

	7	6	5	4	3	2	1	0
Byte 0	1	Length						
Byte 1	Array Offset							

4.2.3 UART/SPI Interface Read Response Packet Structure

After the PSoC 5LP device receives the read command, it responds with the requested data from the PLC_Config array. The Length parameter in the read packet sets the number of bytes to send.

Table 5. UART/SPI Interface Read Response Packet

	7	6	5	4	3	2	1	0
Byte 0	Data from PLC_Config to the Host							

4.2.4 UART/SPI Application Flow

To start this host interface, in bridgeLayer.h, set the HOST_INTERFACE parameter to HOST_UART or HOST_SPI. Then, in the application code, call the BridgeLayer_Init function. The BridgeLayer_Poll function checks if the UART/SPI received a new byte or if the protocol must transmit a response. If it receives a new byte, it stores it according to the packet structure. If the packet is a read packet, it sets the variable hostByteTx to the length that is set by the read packet. If hostByteTx is greater than '0' and UART/SPI FIFO is not full, it stores the next byte in the UART/SPI FIFO. If the protocol is in the middle of receiving a packet but does not receive a new byte in the time window set by the HOST_TIMEOUT parameter, the protocol resets the receiver to wait for a new message.

After an SPI master sends a read message, it should wait at least 1 ms before it starts to send the clock to read out the data, because the protocol requires time to load the response data into the FIFO.

5 External Hardware

Figure 8 shows the section of the hardware that interfaces the PSoC 5LP device to the powerline. With the appropriate coupling circuit, the PSoC 5LP PLC solution can operate on a wide range of powerline voltages and topologies. Attached to this application note are PCB design files for interfacing to the most common powerline high voltage range (120-240 VAC). The hardware contains the following:

- PLC Device
- Transmit Filter
- Transmit Amplification
- Receive Filter
- Coupling Circuit

Figure 8. PLC Hardware Interface Block Diagram

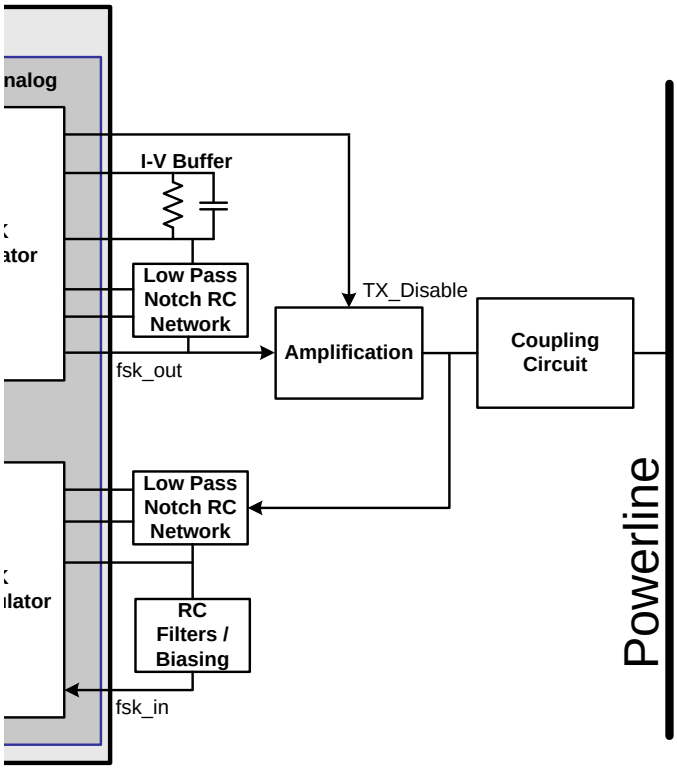

5.1 PLC Device

This section includes the PSoC 5LP device as well as the bypass capacitors, and clock reference. Figure 20 shows the schematics while Table 6 lists the bill of materials (BOM).

Figure 9. PSoC 5LP PLC Device Related Schematics

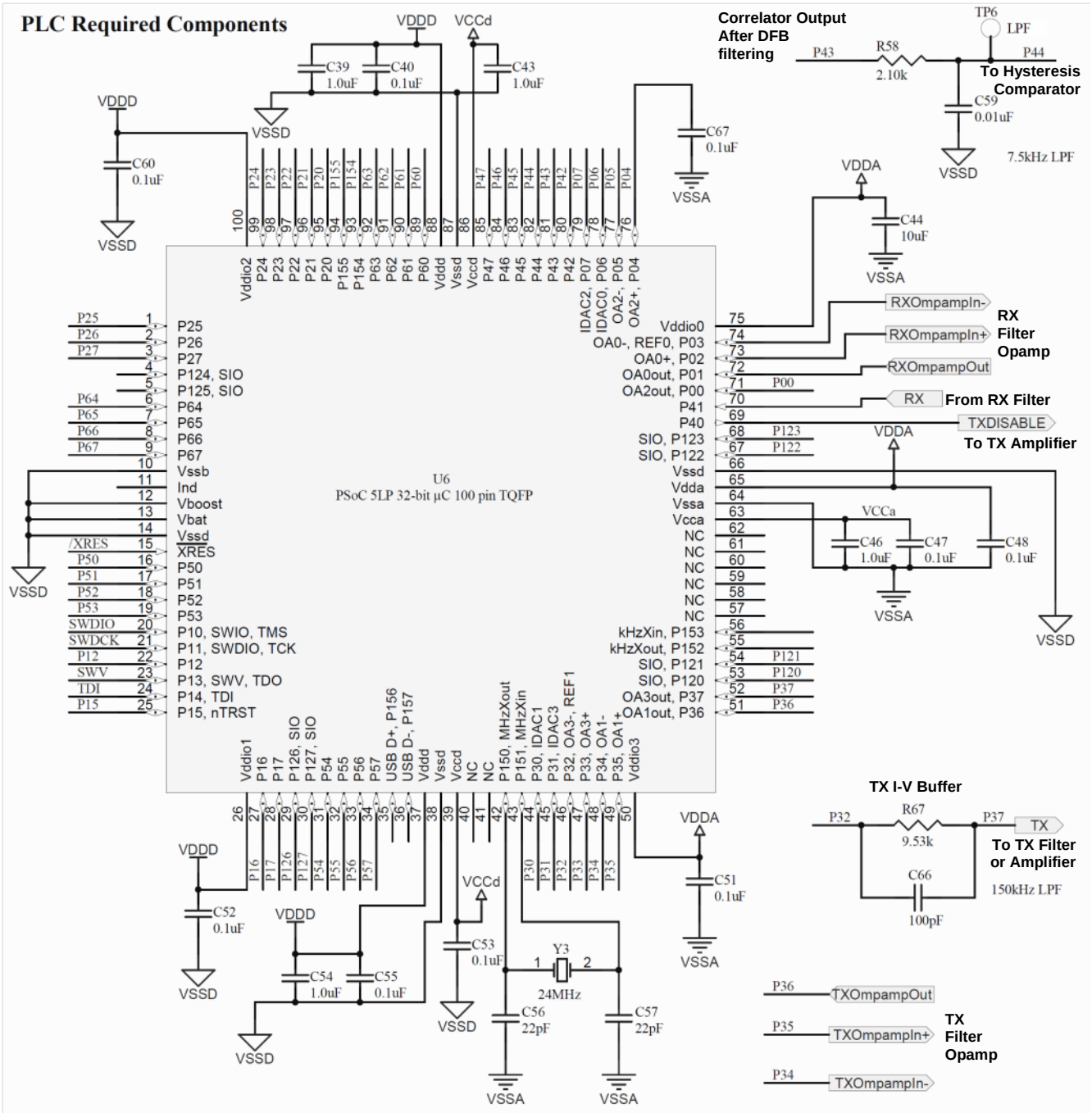

Note: You can also implement the PLC solution on the 68-pin QFN package of the supported PSoC 5LP device.

Other than the decoupling capacitors, there are three key components:

- Y3: The PSoC 5LP device uses a 24 MHz crystal to generate a precise 48 MHz bus clock for the FSK Modulator and FSK Demodulator. It is important that the ppm is low (≤30 ppm) to ensure high performance of the modem.
- R67, C66 (Optional): These components are only necessary if the user wants to have a more sinusoidal FSK signal and wants to control the amplitude of the FSK signal in firmware. In the FSK Modulator component, set the Wave_Type parameter to Sine Wave. These components, along with a PSoC 5LP opamp, form a 150 kHz low-pass filter. This filter converts the IDAC's current into a voltage and filters out the IDAC sampling noise. The output voltage is approximately the IDAC's current multiplied by the value of R67. The IDAC range is 255 µA by default, but the sine wave values determine the actual maximum current. When R67 is 9.53 kΩ and the FSK_Amplitude_Divider is 3, the resulting peak-peak amplitude will be ~600 mVp-p. If the system requires the transmit filter, it is advisable to keep the amplitude to less than 2.0 Vp-p. To generate a clean signal, the board designer should place these components as close to the PSoC 5LP device as possible.

Note: The attached design files also have a 32.768 kHz crystal. This crystal is not necessary for the PLC circuit. It is only on the board for test purposes.

Table 6. PLC Device Related Bill of Materials

Description	Designator	Qty	Value	Manufacturer	Manufacturer Part#	VPN
Capacitor Ceramic 0.10 µF 10% 16 V X7R 0603	C40, C47, C48, C51, C52, C53, C55, C60, C67	9	0.1 µF	TDK	C1608X7R1C104K	445-1317-1-ND
Capacitor Ceramic 10 µF 20% 10 V X5R 0603	C44	1	10 µF	TDK	C1608X5R1A106M	445-6853-1-ND
Capacitor Ceramic 100 pF 5% 50 V NP0 0603	C66	1	100 pF	TDK	C1608C0G1H101J	445-1281-1-ND
Capacitor Ceramic 1.0 µF 16 V X7R 0603	C39, C43, C46, C54	4	1.0 µF	TDK	C1608X7R1C105K	445-1604-1-ND
Capacitor Ceramic 22 pF 100 V C0G 0603	C56, C57	2	22 pF	Murata	GRM1885C2A220JA01D	490-1335-1-ND
Resistor 9.53 k 1% 1/10 W 0603	R67	1	9.53 k	Panasonic	ERJ-3EKF9531V	P9.53KHCT-ND
PSoC 5LP 32-bit µC 256 KB Flash 100-pin TQFP	U6	1		Cypress	CY8C5868AXI-LP035	
Crystal 24.000 MHz ±30 ppm 20 pF SMD	Y3	1	24 MHz	ECS Inc.	ECS-240-20-5PX-TR	XC1255CT-ND

5.2 Transmit Filter

The transmit filter circuit filters out the harmonics from the PLC device so that the signal on the line meets FCC part 15 and/or CENELEC EN50065-1 compliance standards. The PLC device uses FSK modulation to send the data on the powerline. To transmit logic '0', the device generates a signal with frequency X (for example, 133 kHz) and to transmit logic '1', the device generates a signal with frequency Y (for example, 130 kHz). However, the signal generated from the PLC device is not a pure sine wave. It contains harmonics, primarily at the third and fifth harmonics, as well as at the sampling frequency, which is approximately 8 times the FSK frequency. The FCC part 15 and CENELEC EN50065-1 standards have limits on the conducted emissions, which is the unintended "noise" emitted from the device. The transmit filter is necessary to reduce the harmonics below these limits. Figure 10 shows its location in the hardware architecture. The transmit filter is not necessary for systems that do not need to meet these standards. The filter does not provide any significant performance advantage, since the receiver filters out the harmonics before it demodulates the signal. To not use the transmit filter, connect the signal from the RC filter/I-V buffer directly to the transmit amplification stage.

Figure 10. Transmit Filter in the Hardware Block Diagram

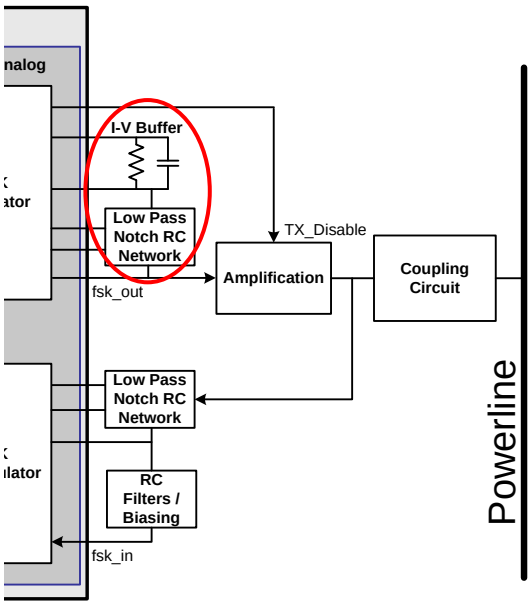

The transmit filter circuit forms a low-pass notch filter with the notch at ~400 kHz, which is near the third harmonic for the 132 kHz FSK signal. This notch frequency is based on an opamp that has a gain bandwidth of 3 MHz, which is the typical rating of the PSoC 5LP opamps. Figure 22 shows a simulation of this circuit. Figure 23 shows the schematics for the transmit filter circuit while Table 7 lists the BOM.

Figure 11. Transmit Filter Simulation with 3 MHz GBW Opamp

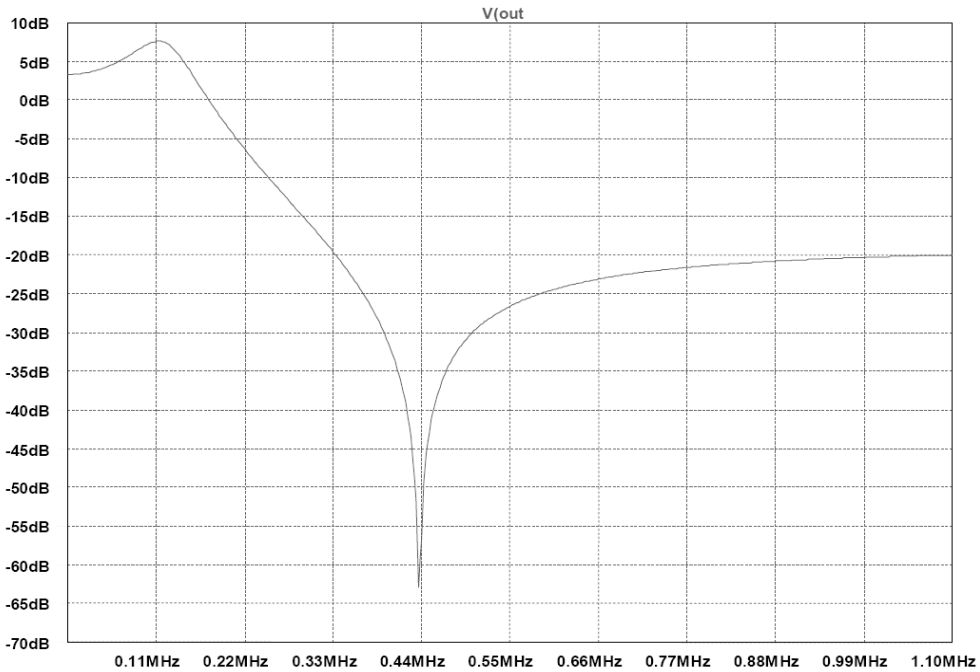

In the schematics, the ports TXOpampIn-, TXOpampIn+, and TXOpampOut connect directly to the PSoC 5LP dedicated opamp pins. Components R15, R17, and C15 create a stable $V_{DDA}/2$ rail. Capacitor C23 couples the PSoC 5LP TX signal to the circuit and blocks the difference in bias levels. The remaining components form the filter. All of the components have standard ratings and are available through typical distribution channels.

In terms of the layout, the board designer should place the feedback components R21, R19, C20, and C22 as close to the opamp pins as possible.

Note: The attached design files also have an external opamp U2 in the transmit filter circuit. This opamp is not necessary for the PLC circuit. It is only on the board for test purposes.

Figure 12. Transmit Filter Schematics

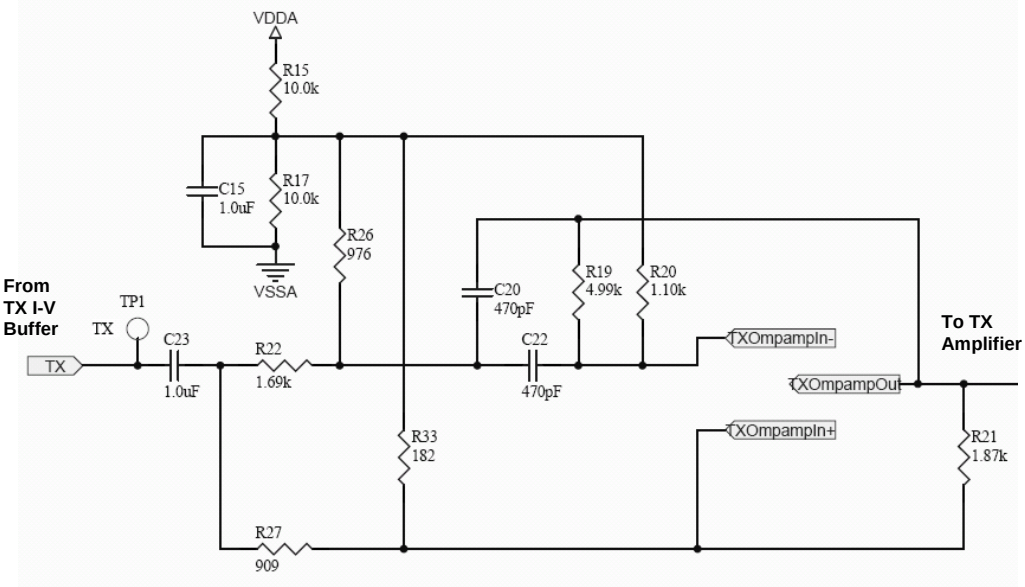

Table 7. Transmit Filter Bill of Materials

Description	Designator	Qty	Value	Manufacturer	Manufacturer Part#	VPN
Capacitor Ceramic 470 pF 5% 50 V C0G 0603	C20, C22	2	470 pF	Murata	GRM1885C1H471JA01D	490-1443-1-ND
Capacitor Ceramic 1.0 µF 16 V X7R 0603	C15, C23	2	1.0 µF	TDK	C1608X7R1C105K	445-1604-1-ND
Resistor 10.0 k 1% 1/10 W 0603	R15, R17	2	10.0 k	Yageo	RC0603FR-0710KL	311-10.0KHRCT-ND
Resistor 4.99 k 1% 1/10 W 0603	R19	1	4.99 k	Panasonic	ERJ-3EKF4991V	P4.99KHCT-ND
Resistor 1.10 k 1% 1/10 W 0603	R20	1	1.10 k	Panasonic	ERJ-3EKF1101V	P1.10KHCT-ND
Resistor 1.87 k 1% 1/10 W 0603	R21	1	1.87 k	Panasonic	ERJ-3EKF1871V	P1.87KHCT-ND
Resistor 1.69 k 1% 1/10 W 0603	R22	1	1.69 k	Panasonic	ERJ-3EKF1691V	P1.69KHCT-ND
Resistor 976 1% 1/10 W 0603	R26	1	976	Panasonic	ERJ-3EKF9760V	P976HCT-ND
Resistor 909 1% 1/10 W 0603	R27	1	909	Panasonic	ERJ-3EKF9090V	P909HCT-ND
Resistor 182 1% 1/10 W 0603	R33	1	182	Panasonic	ERJ-3EKF1820V	P182HCT-ND

5.3 Transmit Amplification

The transmit amplification circuit boosts the PLC signal's voltage and current to drive the signal on the powerline. This is necessary because the load impedance on the powerline is often unknown and can be lower than 1 ohm. Additionally, it helps drive the signal over long distances. Figure 13 shows its location in the hardware architecture.

Figure 13. Transmit Amplification in the Hardware Block Diagram

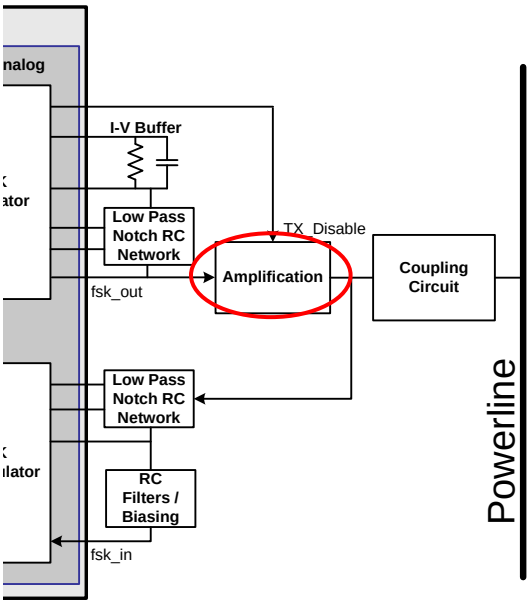

shows the schematic for the transmit amplification circuit while **Table 8** lists the BOM. If the FSK Modulator component's Wave_Type parameter is Sine_Wave and the Transmit_Filter parameter is Enabled, then the input signal will come from the Transmit Filter circuit. If the Wave_Type parameter is Sine_Wave and the Transmit_Filter parameter is Disabled, then the input signal will come from the TX I-V Buffer circuit. If the Wave_Type parameter is Square_Wave, then the input signal will come directly from a PSoC 5LP digital output pin.

The recommended power rail (V_{PWR}) should be greater than the desired signal amplitude and less than the maximum rating of the opamp U4. To meet the FCC part 15 and/or CENELEC EN50065-1 standards, the V_{PWR} rail should be 10 to 12 V.

Figure 14. Transmit Amplification Schematics

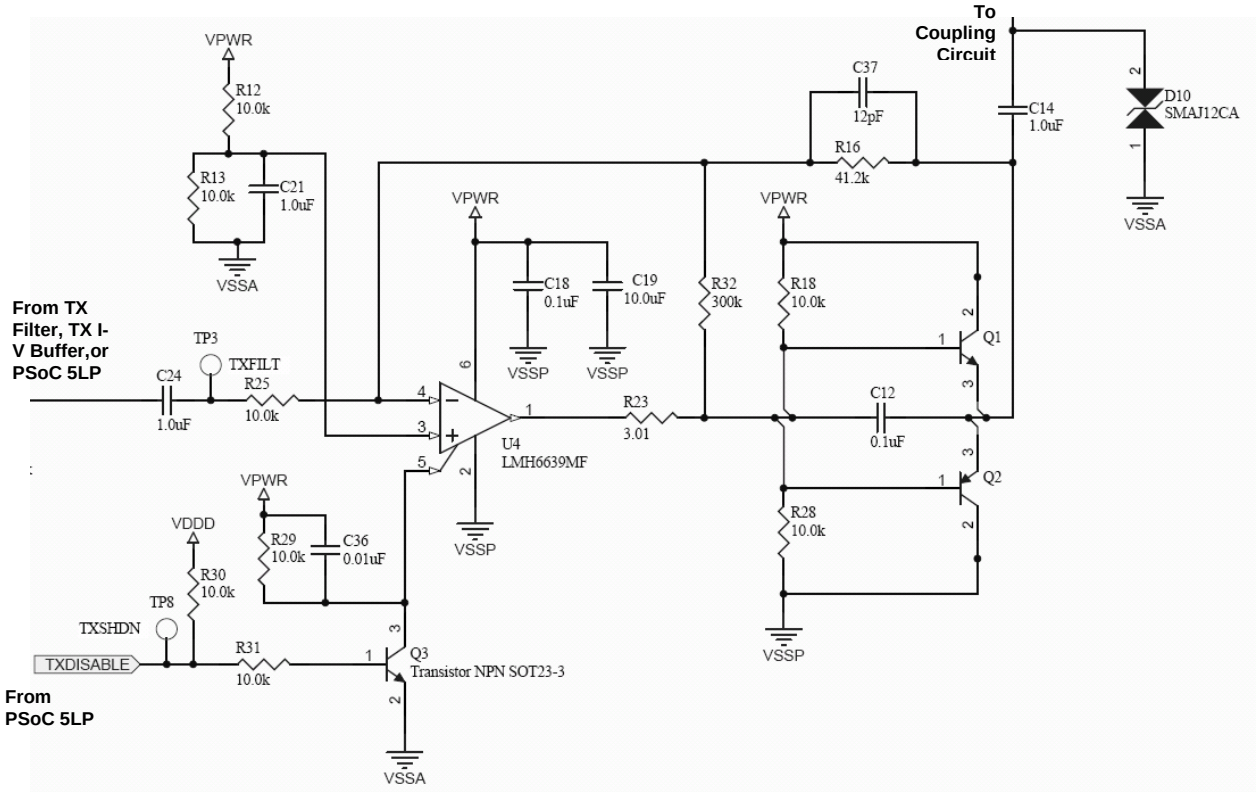

Table 8. Transmit Amplification Bill of Materials

Description	Designator	Qty	Value	Manufacturer	Manufacturer Part#	VPN
Capacitor Ceramic 1.0 µF 16 V X7R 0603	C13, C21, C24	3	1.0 µF	TDK	C1608X7R1C105K	445-1604-1-ND
Capacitor Ceramic 0.10 µF 10% 16 V X7R 0603	C12, C18	2	0.1 µF	TDK	C1608X7R1C104K	445-1317-1-ND
Capacitor Ceramic 10.0 µF 10% 25 V X5R 1206	C19	1	10.0 µF	Taiyo Yuden	TMK316BJ106KL-T	587-1337-1-ND
Capacitor Ceramic 10.0 µF 10% 16 V X5R 0603	C14	1	10.0 µF	Taiyo Yuden	EMK107BBJ106MA-T	587-3238-1-ND
Capacitor Ceramic 0.01 µF 25 V X7R 0603	C36	1	0.01 µF	TDK	C1608X7R1E103J	445-5099-1-ND
Capacitor Ceramic 12 pF 5% 50 V C0G 0603	C37	1	12 pF	Murata	GRM1885C1H120JA01D	490-1405-1-ND
Transient Voltage Suppressor 400 W 12 V BIDIRECT SMA	D10	1		Micro Commercial Co	SMAJ12CA-TP	SMAJ12CA-TPMSCT-ND
Transistor NPN HV 45 V 2 A SOT-89	Q1	1		Zetex	FCX491ATA	FCX491ACT-ND
Transistor PNP HV 40 V 2 A SOT-89	Q2	1		Zetex	FCX591ATA	FCX591ACT-ND
Transistor NPN SOT-23	Q3	1		Infineon	SMBT 3904 E6327	SMBT3904INCT-ND
Resistor 10.0 k 1% 1/10 W 0603	R12, R13, R18, R25, R28, R29, R30, R31	8	10.0 k	Yageo	RC0603FR-0710KL	311-10.0KHRCT-ND

Description	Designator	Qty	Value	Manufacturer	Manufacturer Part#	VPN
Resistor 41.2 k 1% 1/10 W 0603	R16	1	41.2 k	Yageo	RRC0603FR-0741K2L	311-41.2KHRCT-ND
Resistor 3.01 1% 1/10 W 0603	R23	1	3.01	Yageo	RC0603FR-073R01L	311-3.01HRCT-ND
Resistor 300 k 1% 1/10 W 0603	R32	1	300 k	Panasonic	ERJ-3EKF3003V	P300KHCT-ND
Op-Amp 190 MHz	U4	1		National Semiconductor	LMH6639MF/NOPB	LMH6639MFCT-ND

Components R12, R13, and C21 form the $V_{PWR}/2$ rail that biases opamp U4. Components R30, R31, Q3, R29, and C36 convert the PSoC 5LP's TX_Disable signal from a V_{DD} rail to a V_{PWR} rail so that the FSK Modulator can disable the opamp U4 when it is not transmitting. The capacitor C24 couples the output of the transmit filter (or the PSoC 5LP directly if the FSK Modulator's Wave_Type is Square Wave). Resistors R25 and R32 form the gain for the opamp, while R25 and R16 form the gain for the entire stage, which is more important. The gain is set to ~4x (12 dB) to boost the amplitude from the transmit filter. Capacitor C37 removes any high frequency ringing in the feedback path. Capacitors C18 and C19 decouple the noise from the power. Resistor R23 limits the current of the U4 output. R18 and R28 bias the transistors Q1 and Q2 so that they turn off when U4 is disabled. Capacitor C12 reduces high frequency ringing. Transistors Q1 and Q2 are high-current (2A) transistors that can drive low-impedance loads. Capacitor C14 couples the transmit path to the coupling and prevents the transformer or inductor from DC shorting the transmitter. Diode D10 is for surge protection.

The opamp U4 is a critical component, because it controls the high-current transistors. The opamp must meet these requirements:

- Rail-to-rail output drive capability ≥100 mA
- Gain bandwidth product (GBW) >50 MHz
- Voltage feedback
- The maximum $V_{DD} - V_{SS}$ rating of the opamp should be greater than the V_{PWR} rail and the required signal amplitude. $V_{DD} - V_{SS}$ is ≥10 V when FCC or CENELEC compliance is required.
- Power supply rejection ratio (PSRR) >70 dB
- Total harmonic distortion (THD) < – 60 dB
- Includes a shutdown pin to turn off its output when not transmitting PLC data. This ensures a high impedance so that the transmitter does not attenuate the received signal. The current requirement is typically <1 mA to drive the shutdown pin.

In the schematics, there are two ground rails: V_{SSA} (Analog) and V_{SSP} (Power). These rails must connect together at a point but be separate otherwise. This placement minimizes the large switching noise of the transistors and reduces disruption of the sensitive analog signal paths of the transmitter and receiver.

Note: The attached design files also have a second opamp U9 in the transmit amplification circuit. This opamp is not necessary for the PLC circuit. It is only on the board for test purposes.

5.4 Receive Filter

The receive filter reduces out of band noise. The receive filter has the exact same low-pass notch filter as the transmit filter. Figure 15 indicates the receive filter's location in the hardware architecture.

Figure 15. Receive Filter in the Hardware Block Diagram

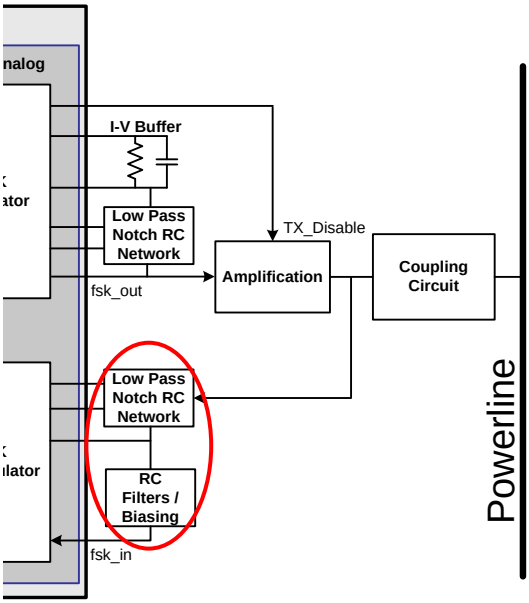

Figure 16 shows the schematics for the receive filter circuit while Table 9 lists the BOM. This circuit has a few additional components between the notch filter and the PSoC 5LP receive pin. Components R38 and C25 form a 700 kHz low-pass filter. Capacitor C10 blocks the DC between the filter and the PSoC 5LP RX pin. Resistors R9 and R11 bias the RX pin to $V_{DDA}/2$ and form a 33 kHz high-pass filter with C10. Diode D6 protects the RX pin from over-voltage or under-voltage conditions.

In the schematics, the ports RXOpampIn-, RXOpampIn+, and RXOpampOut connect directly to the PSoC 5LP dedicated opamp pins.

In terms of the layout, the board designer should place the feedback components R6, R24, C2, and C5 as close to the opamp pins as possible.

Since the received signal could be very small (<50 dBµVrms), the receive path is the most critical. It is very important to keep any high frequency or high-power sources away from the receive path.

Figure 16. Receive Filter Schematics

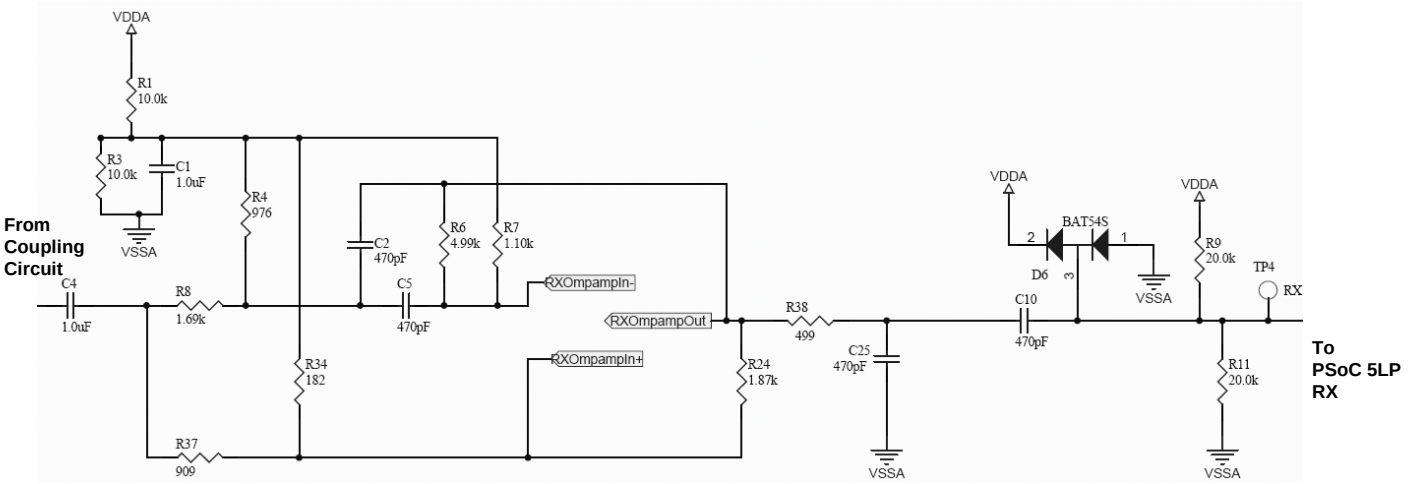

Table 9. Receive Filter Bill of Materials

Description	Designator	Qty	Value	Manufacturer	Manufacturer Part#	VPN
Capacitor Ceramic 1.0 µF 16V X7R 0603	C1	1	1.0 µF	TDK	C1608X7R1C105K	445-1604-1-ND
Capacitor Ceramic 470 pF 5% 50V C0G 0603	C2, C5, C10, C25	4	470 pF	Murata	GRM1885C1H471J A01D	490-1443-1-ND
Capacitor Ceramic 0.10 µF 10% 16V X7R 0603	C17	1	0.1 µF	TDK	C1608X7R1C104K	445-1317-1-ND
Dual Schottky Diode	D6	1		ST Micro	BAT54SFILM	497-2522-1-ND
Resistor 10.0 k 1% 1/10 W 0603	R1, R3	2	10.0 k	Yageo	RC0603FR-0710KL	311-10.0KHRCT-ND
Resistor 4.99 k 1% 1/10 W 0603	R6	1	4.99 k	Panasonic	ERJ-3EKF4991V	P4.99KHCT-ND
Resistor 1.10 k 1% 1/10 W 0603	R7	1	1.10 k	Panasonic	ERJ-3EKF1101V	P1.10KHCT-ND
Resistor 1.87 k 1% 1/10 W 0603	R24	1	1.87 k	Panasonic	ERJ-3EKF1871V	P1.87KHCT-ND
Resistor 1.69 k 1% 1/10 W 0603	R8	1	1.69 k	Panasonic	ERJ-3EKF1691V	P1.69KHCT-ND
Resistor 976 1% 1/10 W 0603	R4	1	976	Panasonic	ERJ-3EKF9760V	P976HCT-ND
Resistor 909 1% 1/10 W 0603	R37	1	909	Panasonic	ERJ-3EKF9090V	P909HCT-ND
Resistor 182 1% 1/10 W 0603	R34	1	182	Panasonic	ERJ-3EKF1820V	P182HCT-ND
Resistor 499 1% 1/10 W 0603	R38	1	499	Panasonic	ERJ-3EKF4990V	P499HCT-ND
Resistor 20.0 k 1% 1/10 W 0603	R9, R11	2	20.0 k	Yageo	RC0603FR-0720KL	311-20.0KHRCT-ND

5.5 Coupling Circuit

The coupling circuit provides a low impedance path for the PLC signal between the powerline and the PLC transmit/receive circuitry and blocks the power from destroying the low-voltage components. Line-Neutral (L-N) coupling is the most common coupling scheme for high-voltage AC PLC systems. It is most common because neutral is always present. There are European leakage current restrictions on using earth to couple the signal, and line-earth coupling can have problems with low-current ground fault interrupters (GFI). An isolated design helps to avoid potential electric shock hazards for applications that require direct user interface.

Figure 17 shows the schematics for the line-neutral isolated coupling circuit, while Table 10 lists the BOM.

Figure 17. 110-240 VAC Line-Neutral Isolated Coupling Circuit Schematics

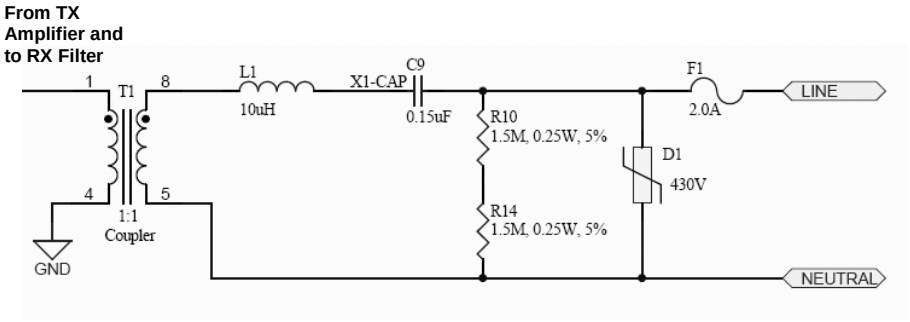

Table 10. 240 VAC Line-Neutral Isolated Coupling Circuit Bill of Materials

Description	Designator	Qty	Value	Manufacturer	Part#	VPN
Capacitor Metal Poly Film 0.15µF 300 VAC X1	C9	1	0.15 µF	Panasonic	ECQ-U3A154MG	P11117-ND
Transorb Voltage Suppressor 430V 1250A ZNR	D1	1	430 V	Panasonic	ERZ-V07D431	P7251-ND
Fuse 2A Slow Blow 250 VAC	F1	1	2.0 A	Bel Fuse	RST 2	507-1179-ND
Inductor 10µH 20% 1210 SMD	L1	1	10 µH	Murata	11R103C	811-2024-ND
Resistor 1.5 MOhm 1/2W 5% 1210	R10, R14	2	1.5 M	Panasonic-ECG	ERJ-14YJ155U	P1.5MVCT-ND
Isolation Transformer LLeakage< 11µH, LMutual > 1mH, DCR <= 0.25W	T1	1		Vacuumschmelze (VAC)	5024-X044	Contact Vacuumschmelze

Capacitor C9 filters out the high voltage, low frequency (DC – 60 Hz) power on the powerline from entering into the low-voltage transmit/receive circuitry. This capacitance should be large enough so that its impedance at the communication frequency is low, yet small enough that its impedance at the power's frequency is high. To drive heavy loads and long distances, the transmit output impedance should be minimized. An X-Capacitor is used for adequate surge immunity. The board designer can replace the X1 capacitor listed in the BOM with an X2 capacitor of the same value based on the surge immunity requirements. This capacitor should have a metal-film construction for lower series resistance and additional surge immunity.

Transformer T1 isolates the PSoC 5LP and the low-voltage transmit and receive circuitry from the AC mains line and neutral. The primary inductance of the transformer should be ≥1 mH to provide a high load impedance for the received signal. The leakage inductance should be less than 11 µH (refer to the text the equations that follow). If the transformer's leakage inductance is insufficient, an inductor between T1 and C2 can make up for the difference. Circuits that require isolation must have both an isolated coupling circuit as well as an isolated power supply.

The usage of inductor L1 depends on the layout of the powerline. This inductor can reduce the transmit impedance of the series combination of capacitors C9 (0.15 µF) and C14 (1.0 µF). Since an inductor's phase is 180 degrees out of phase with a capacitor, the optimum value of the inductor would have the same magnitude of impedance as the series combination of capacitors C9 and C14. In other words:

$$\frac{1}{2\pi f C_{eq}} = 2\pi f L \qquad \text{Therefore:} \qquad L = \frac{{}^{1}/_{C1} + {}^{1}/_{C2}}{4\pi^2 f^2}$$

Substituting f = 132 kHz, C1 = 1 µF, C2 = 0.15 µF yields: L = 11.1 µH

Since the leakage inductance of transformer T1 is 1 µH, the ideal value for L1 is 10 µH. Since impedance includes both resistance and reactance, the inductor's DC resistance should be less than 0.25 Ω to minimize resistive attenuation. To drive heavy loads, the inductor's current rating should be greater than 700 mA. Since the powerline cable has its own series inductance (in addition to a DC resistance and load capacitance), this inductance has the same effect as with L1. If the inductance is greater than 11 µH, it over-compensates for capacitor C2 and starts to cause attenuation of the signal. Therefore, it is optimal that L1 be less than (11 µH – Lcable). The specification for inductance of a powerline cable is usually given in µH/ft, and it is typically between 0.1 and 0.25 µH/ft. A 60 ft cable with average inductance (0.18 µH/ft) has ~11 µH of total inductance. Therefore, inductor L1 is only advisable if the distance between nodes is less than 60 ft.

Resistors R10 and R14 discharges capacitor C9 when power is removed from the system. R10 and R4 are sometimes known as bleeder resistors. In some systems, the on-board power supply is able to discharge the capacitor quickly enough, such that these resistors are not necessary.

Diode D1 provides greater surge immunity. The board designer can replace this component with two back-to-back zener diodes (for example, with two 5 Watt Zener diodes with the same part number IN5343B (Digikey#1N5343BMSCT-ND)).

The board designer should follow the proper high voltage safety guidelines (e.g. EN60950).

Power Supply Design Considerations

In addition to the overall system requirements, the power supply must meet the following requirements:

- Provide a V_{PWR} rail (up to 12 V for the opamp U4 in Figure 13) for the transmit amplification circuit. The amount of current is based on how much loading is on the line. For typical AC powerlines, a 150 mA rating is recommended.
- Provide a 5 V V_{DD} rail that supplies >100 mA of current for the PSoC 5LP device.
- If the system uses a switch-mode power supply, select a switching frequency such that the fundamental frequency and harmonics are not within ±5 kHz of the PLC frequencies. For example, for the 130 to 133 kHz PLC frequencies, avoid switching frequencies of 42 to 46 kHz, 63 to 69 kHz, and 125 to 138 kHz. This provides the best receiver input sensitivity.
- Many power supplies use large bulk capacitors (>1 µF) across line and neutral for EMI reduction (C30 and C31 in Figure 18). These capacitors attenuates the PLC signal, because at 130 kHz, they have an impedance <1.2 Ω. To prevent this, place an inductor (L3 in the schematics) between the line and these capacitors. The value of the inductor will be a large factor in the receiver's impedance. A high impedance (>500 Ω) is necessary if there are long transmission distances (>1 km) or if there are many (>500) PLC nodes on the network. A 1.5 mH inductor provides an impedance of 1240 Ω at 130 kHz.

Figure 18. Power Supply Line Filtering Schematics

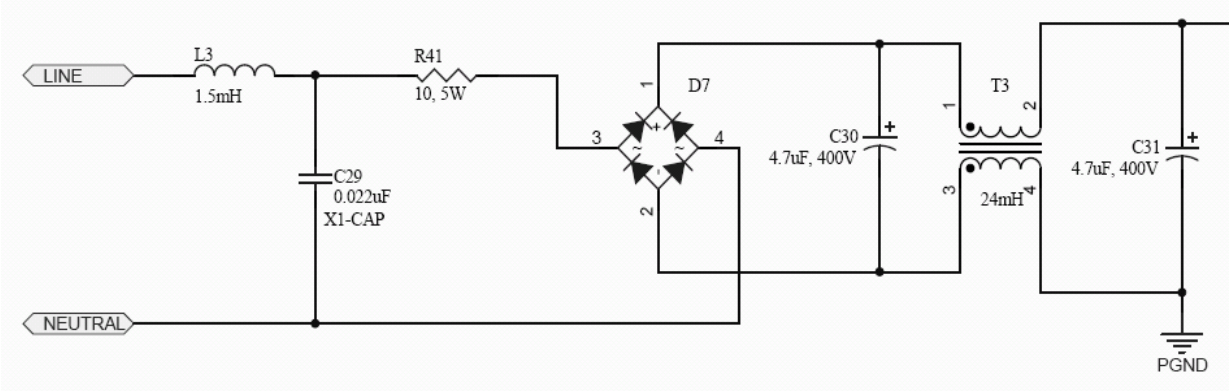

Table 11. Power Supply Line Filter Bill of Materials

Description	Designator	Qty	Value	Manufacturer	Manufacturer Part#	VPN
Capacitor Metal Poly Film 0.022uF 300 VAC X1	C29	1	0.022 µF	Panasonic	ECQ-U3A223MG	P11112-ND
Inductor 1500uH 0.2A 10% Radial	L3	1	1.5 mH	TDK	TSL0808RA-152KR21-PF	445-3757-1-ND

The power supply in the attached design files provides a low-cost solution that meets these requirements. However, as it does not regulate the load, the supply voltage drops with increased current (by approximately -25 mV per 1 mA increase). The board consumes ~100 mA when there is a heavy load (1 □F capacitor) on the line. In this case, the supply voltage drops to ~7.0 V, which stills work for this system. However, for systems that require tighter load regulation or have higher current consumption, the designer should select a different supply or add load regulation.

6 Performance

This section provides the typical performance of the PSoC 5LP PLC solution, which uses the attached code example as the firmware and the attached design files as the hardware except where noted.

6.1 Transmitter Conducted Emissions

For systems that must comply with FCC Part 15 or CENELEC EN50065-1, the transmitter's output signal must be below specified limits. Figure 19 shows the conducted emissions test setup. A line impedance stabilization network (LISN) provides a stable 50 Ω impedance, and we use it for CENELEC compliance tests. A spectrum analyzer connects to the 50 Ω monitor of the LISN. We modified the PSoC 5LP PLC firmware so that the transmitter constantly transmits a PLC signal that switches between 130.4 kHz and 133.3 kHz and the FSK_Amplitude_Divider parameter is 3.

Figure 19. Conducted Emissions Test Setup

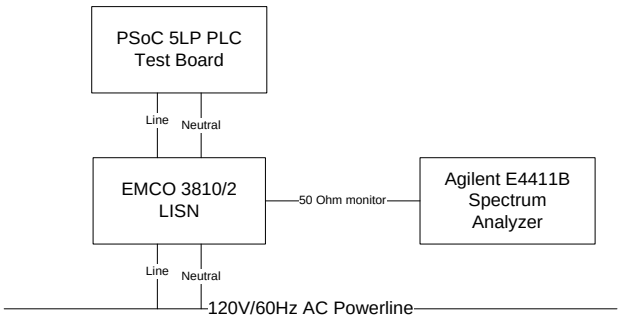

Figure 31 shows the test results of the PLC transmitter. The red line is the limit for CENELEC and FCC. The FCC specification only covers the frequencies above 150 kHz. The CENELEC specification also defines limits for frequencies 3 kHz to 150 kHz and the maximum PLC signal limit of 122 dBµVrms at the carrier frequency. The Cypress PLC transmitter's emissions have at least a 5 dB margin to the specification limits.

Figure 20. Conducted Emissions at 132 kHz

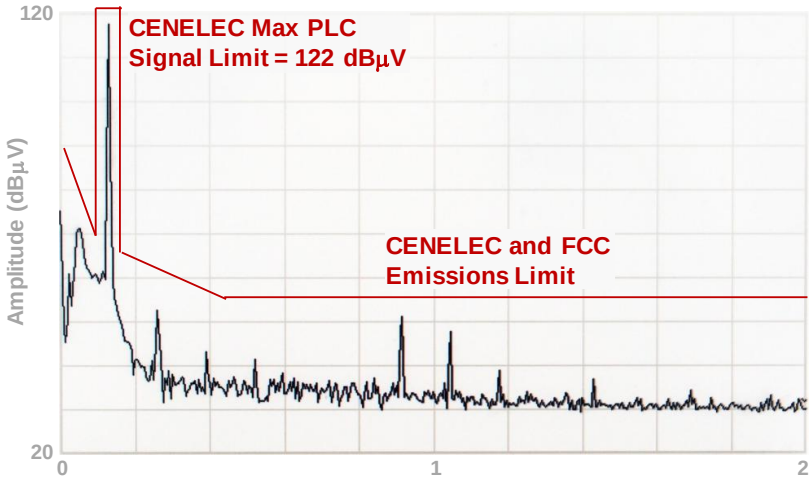

6.2 Transmission with Heavy Loads

Typical residential powerlines have impedances that vary between 3 Ω and 50 Ω. In most situations, the transmitter can drive these loads, especially over long distances. Figure 32 shows the setup for this test. The test equipment is the same as the conducted emissions test with the variation of the following parameters:

- The cable between the test board and LISN is 3, 50, or 100 ft. The cable gauge is 16 AWG.
- The load is either the 50 Ω impedance of the LISN or a 1 µF capacitor (1.2 Ω impedance @ 130 kHz). The capacitor is X1 safety rated and rated for 250 VAC powerlines. There is also a 1 MΩ resistor, which is used to discharge the capacitor when it is removed from the powerline. This bleeds out the voltage, so that it does not shock the person that handles it

Figure 21. Transmitter Loading Test Setup

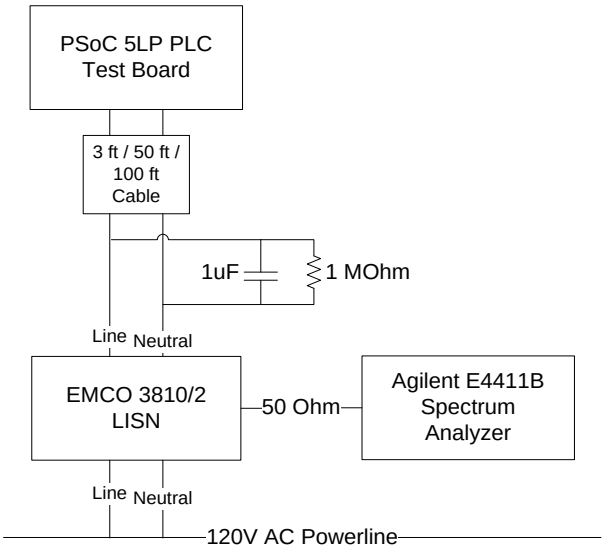

On the PSoC 5LP PLC test board, the inductor L1 is either the default 10 mH inductor, or it is shorted out. See the Coupling Circuit section for details on how to select the L1.

Figure 22 shows the test results. When the load impedance decreases, the amplitude of the signal decreases, as expected. However, even with a worst-case load, the signal level is still sufficiently above the minimum sensitivity (see the Receiver Input Sensitivity section for details).

Figure 22. Transmitter Loading Test Results

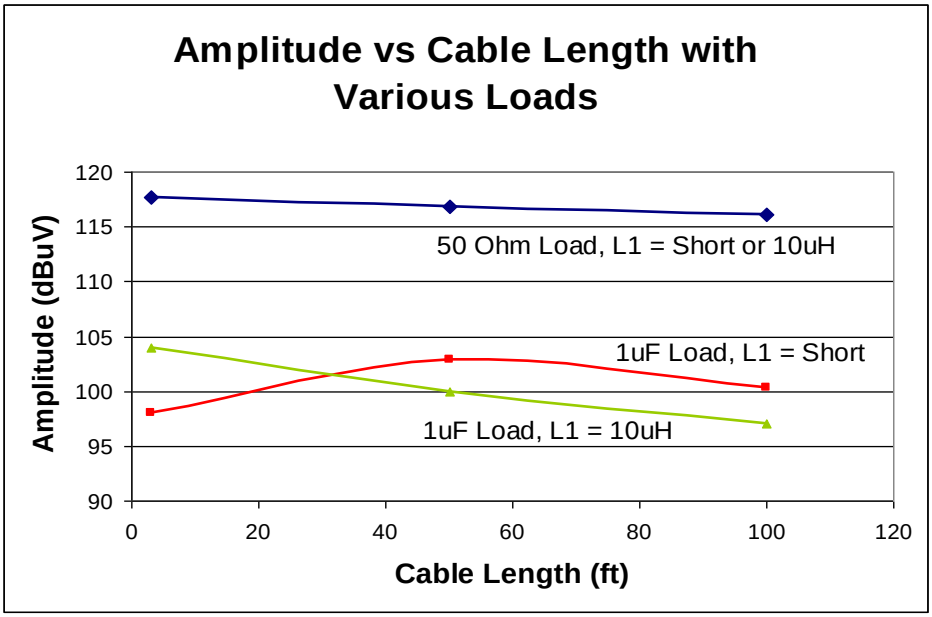

As described in the Coupling Circuit section, the inductor matches the impedance of the capacitor, so the transmit impedance is as low as possible at the output of the test board as demonstrated by the increased amplitude at 3 ft for the green line as compared with the red line. However, for longer cable lengths, the inductance of the cable causes the total inductance to be greater than the capacitance, which increases the transmit impedance. This explains why the green line continuously decreases with cable length. Conversely, when an inductor is not used, the impedance at the test board is more capacitive. As the cable length increases, the additional inductance offsets the capacitance as demonstrated by the red line, where the amplitude actually increases as the cable increases from 3 to 50 ft.

Therefore, the use of the inductor depends on how much cable is between the transmitter and the loads on the powerline. For cable lengths less than 30 ft, a 10 μH inductor helps to increase the amplitude. Otherwise, an inductor is not necessary.

6.3 Receiver Input Sensitivity

The receiver sensitivity determines the minimum amplitude that the receiver can successfully receive PLC data. Cable length, loading (televisions, switching power supplies, motors, and so on), and any components that are in the path (circuit breakers, transformers) can affect the amplitude of the PLC signal.

Figure 23 shows the setup for the receiver sensitivity test. A PSoC 5LP PLC test board transmits PLC packets (8-byte header) to a second PSoC 5LP PLC board. A spectrum analyzer measures the received signal at the input to the receiver filter (C4, on the left side of Figure 16).

Figure 23. Receiver Sensitivity Test Setup

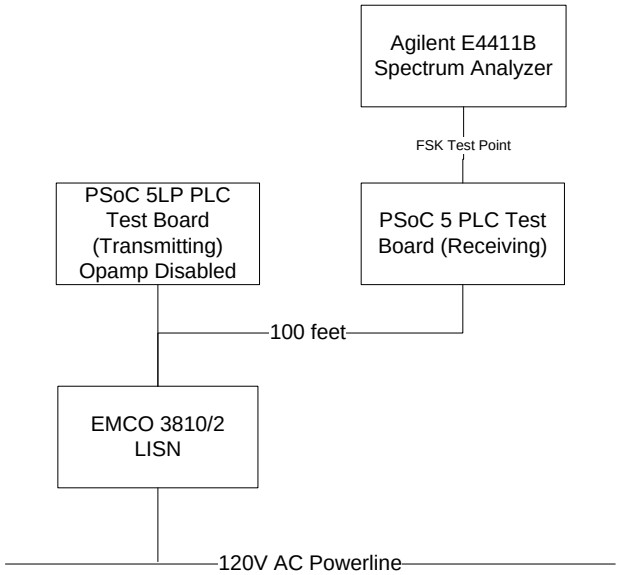

Referring to the transmit amplification circuit in Figure 13, we disconnect power to the amplification circuit (VPWR), which means that the filtered transmit signal passes through R25 (10.0 k□) and R16 (41.2 k Ω) resulting in a very high impedance. On the receiving board, the spectrum analyzer provides a 50 Ω load, which causes the signal to be heavily attenuated. The TX_GAIN byte in the PLC_Config array sets the amplitude of the signal.

The transmitter sends at least 1000 packets and the receiver displays how many packets were successfully received (valid CRC). The following formula converts the packet success rate (PSR) to a bit error rate:

$$\mathrm{BER} = 1 - 10^{\log(\mathrm{PSR})/PacketLength}$$

Where the *PacketLength* = 80 (10 bytes × 8 bits)

A BER of 10^{-3} is equivalent to an approximately 92 percent success rate for this packet length. A BER of 10^{-4} is equivalent to an approximately 99 percent success rate.

Figure 24 shows the receiver sensitivity test results for the 132 kHz FSK center frequency and for four different receive gain values. The noise floor was ~20 dBµV. The results show that the system can successfully receive a 43 dBµVrms signal with a BER less than 10^{-3} and a 45 dBµVrms signal with a BER less than 10^{-4}. When the system transmits at the CENELEC compliant level of 122 dBµVrms, this means that the signal can be attenuated by 77 dB (7000x).

When the receive gain is increased from 1x to 2x, the input sensitivity is improved by 1-2 dB (that is, the device can receive a 1-2 dB smaller signal). When the receive gain is increased from 2x to 4x, the input sensitivity is improved by 1-2 dB when the input amplitude is less than 45 dBµVrms. However, at amplitudes greater than 45 dBµVrms, the input sensitivity is approximately the same as when the receive gain is 2x. The Narrow-band SNR section shows the tradeoff for increasing the receive gain.

Figure 25 shows results for the 110 kHz FSK center frequency. The results show that the system can successfully receive a 43 dBµVrms signal with a BER less than 10^{-3} and a 46 dBµVrms signal with a BER less than 10^{-4}.

Figure 24. Receiver Sensitivity Test Results at 132 kHz FSK Center Frequency with Different Receive Gains

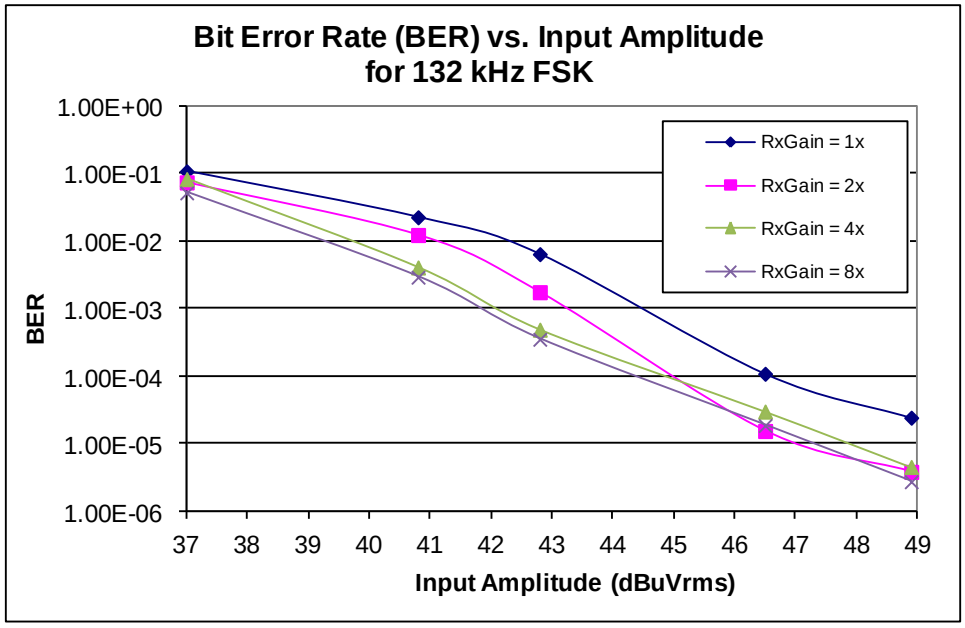

Figure 25. Receiver Sensitivity Test Results at 110 kHz FSK Center Frequency with Different Receive Gains

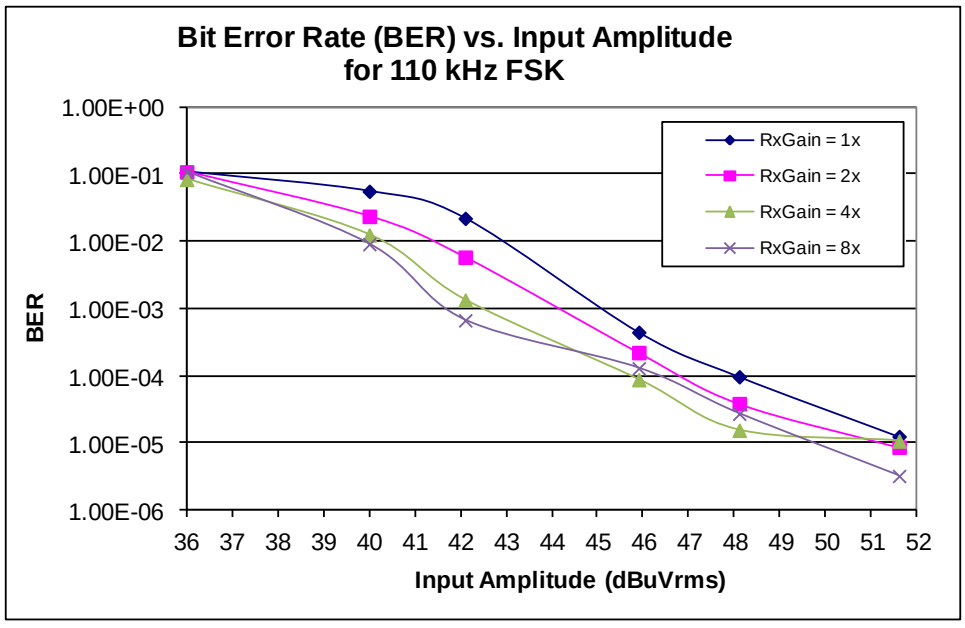

Figure 26 (132 kHz FSK) and Figure 27 (110 kHz FSK) show the receiver input sensitivity test results when FEC encoding and frequency hopping are each enabled. With the frequency hopping option, the transmitter continuously sends packets with a fixed FSK center frequency while the receiver hops between 110 kHz and 132 kHz until it detects the FSK signal for each packet. Since the receiver stays locked on the FSK center frequency for 500 ms after it receives a valid packet (default value of Frequency_Hopping_Lock_Time), the transmitter in this test waits for 600 ms between transmitting packets so that the receiver doesn't stay locked and goes back to frequency hopping. This tests the receiver's ability to find the correct frequency for each packet. It normal applications, the receiver will stay locked on that frequency until after the following packet is transmitted.

The graphs show that FEC encoding provides one to two orders of magnitude lower bit error rates or at least 4 dB better input sensitivity. Frequency hopping provides similar (within 1 dB) results to the standard fixed frequency results. The Narrow-band SNR section shows the benefits of frequency hopping.

Figure 26. Receiver Sensitivity Test Results at 132 kHz FSK Center Frequency with FEC and Frequency Hopping

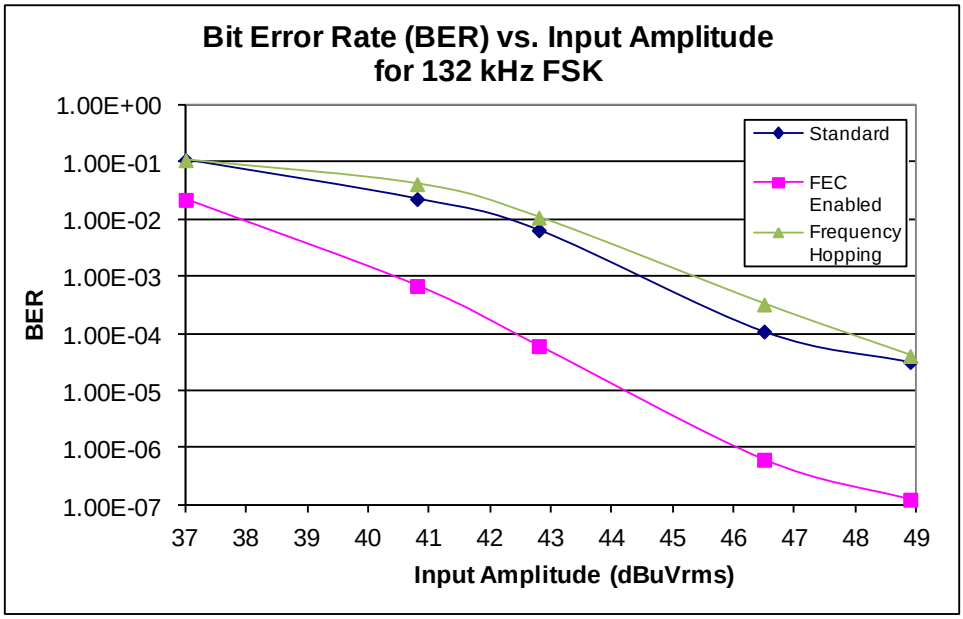

Figure 27. Receiver Sensitivity Test Results at 110 kHz FSK Center Frequency with FEC and Frequency Hopping

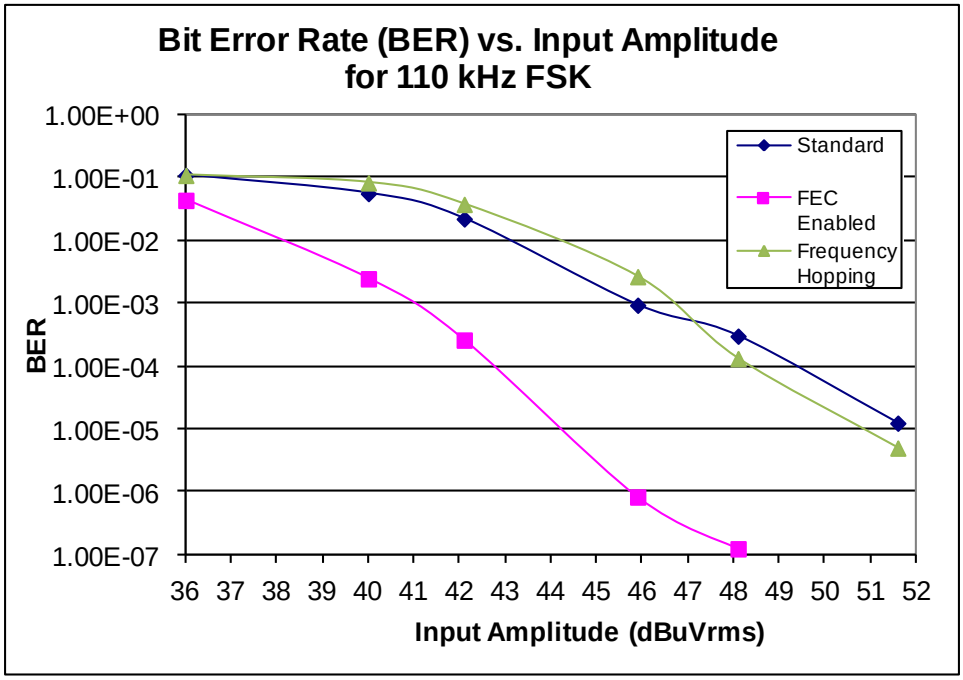

6.4 Receiver Noise Immunity

The packet transmission success rate in the presence of noise on the powerline determines the noise immunity of the receiver. Examples of noise sources are televisions, vacuums, and intercoms. Figure 28 shows the receiver noise test setup. As in the receiver sensitivity test, the transmitter sends at least 1000 packets for each test, and we measure the percentage of packets received. The spectrum analyzer measures the input to the receive filter. The TX_Amplitude_Divider parameter is 192, so that the transmitter generates an amplitude of 86 dBμV at the receiver filter input.

Figure 28. Receiver Noise Immunity Test Setup

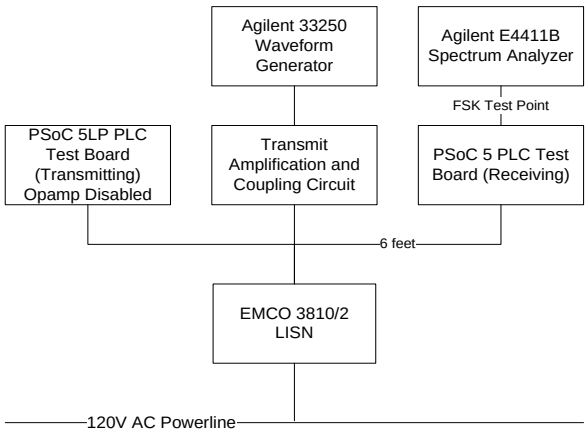

6.4.1 White Noise SNR

For this test, the waveform generator is set to Noise mode. We vary the amplitude of the noise and measure the packet success rate. The bit error rate (BER) calculation is the same as the receiver sensitivity test. To calculate the signal-noise ratio (SNR), subtract the noise level from the PLC signal.

Figure 29 shows the results of the white noise test at 132 kHz FSK center frequency. As the noise level increases, the SNR decreases and the BER increases. The BER is less than 10^{-3} for an SNR greater than 10 dB. The BER is less than 10^{-4} for an SNR greater than 11 dB. There is less than 1 dB difference between the results of the different receive gain values.

Figure 30 shows the results of the white noise test at 110 kHz FSK center frequency. The BER is less than 10^{-3} for an SNR greater than 7 dB. The BER is less than 10^{-4} for an SNR greater than 9 dB. There is less than 1 dB difference between the results of the different receive gain values.

Figure 29. Receiver White Noise Immunity Test Results at 132 kHz with Different Receive Gains

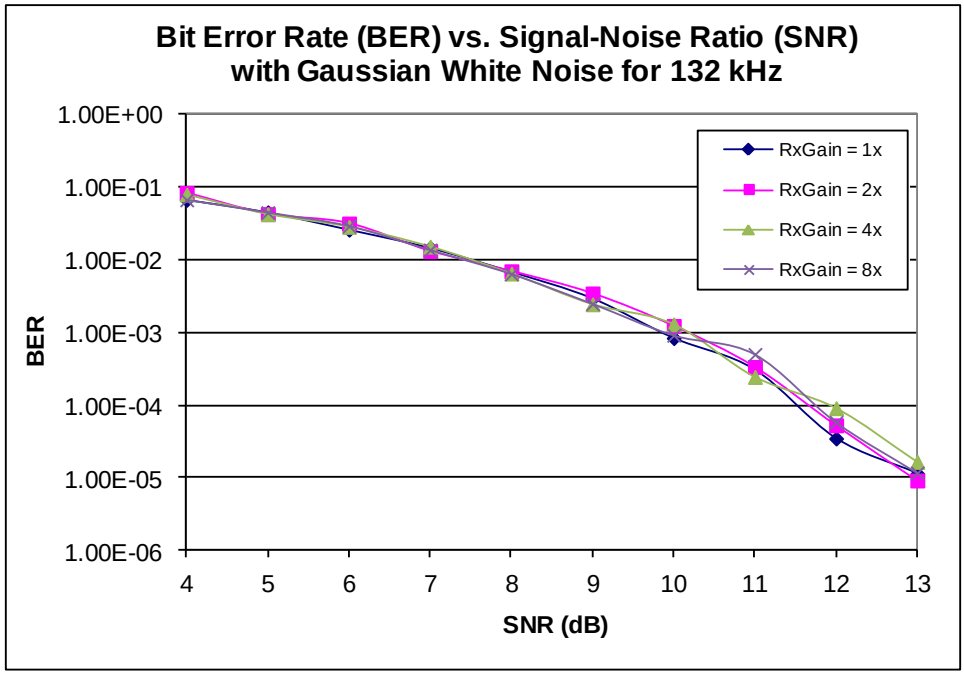

Figure 30. Receiver White Noise Immunity Test Results at 110 kHz with Different Receive Gains

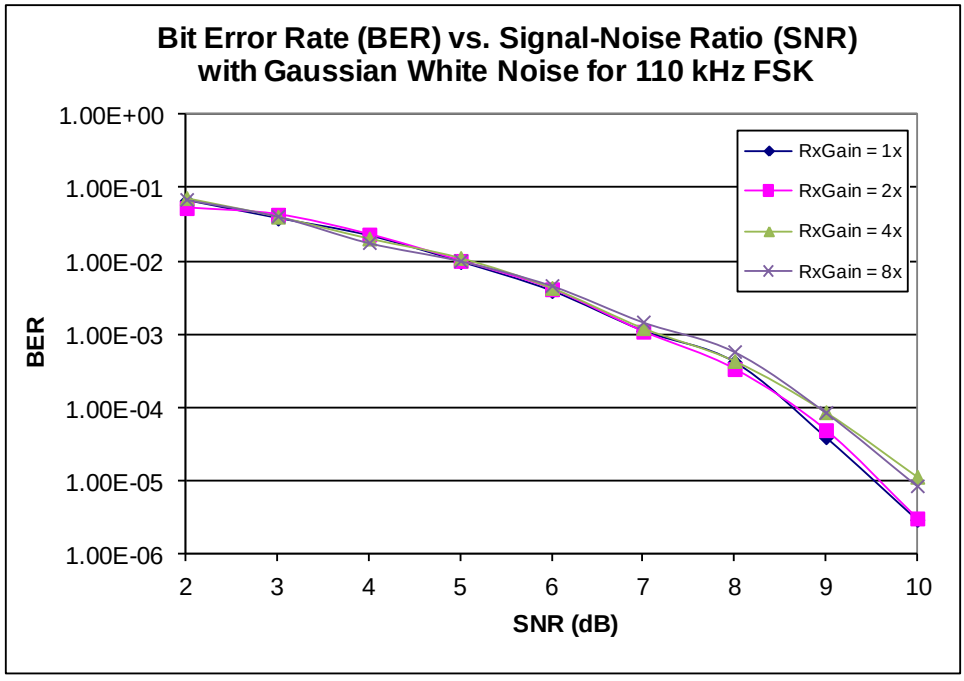

Figure 31(132 kHz FSK) and Figure 32 (110 kHz FSK) show the white noise immunity test results when FEC encoding and frequency hopping are each enabled. The graphs show that FEC encoding provides approximately one order of magnitude lower bit error rates or 1-2 dB better noise immunity. Frequency hopping provides similar (within 1 dB) results to the standard fixed frequency results. The Narrow-band SNR section shows the benefits of frequency hopping.

Figure 31. Receiver White Noise Immunity Test Results at 132 kHz with FEC and Frequency Hopping

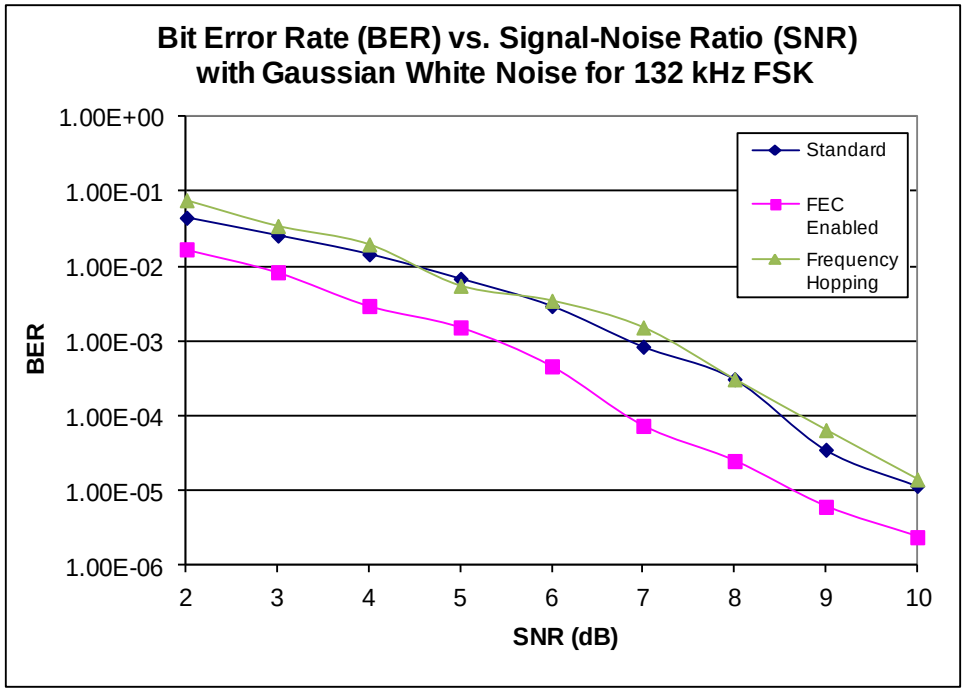

Figure 32. Receiver White Noise Immunity Test Results at 110 kHz with FEC and Frequency Hopping

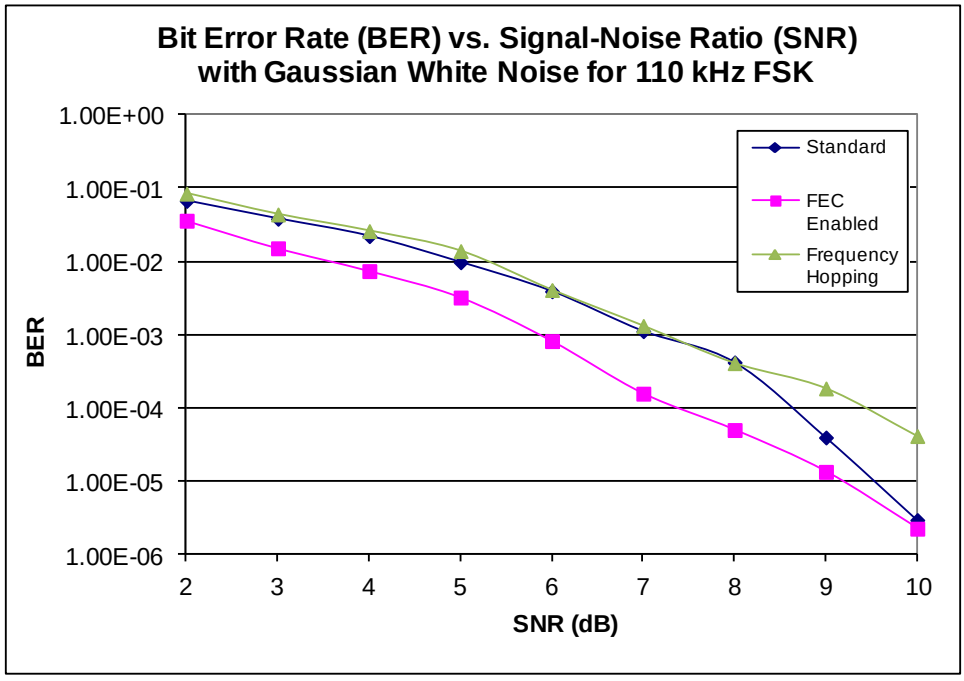

6.4.2 Narrow-band SNR

For this test, the waveform generator is set to Sine mode. We vary the frequency and amplitude of the noise until the packet success rate is greater than 99 percent (BER less than 10^{-4}). The bit error rate (BER) calculation is the same as for the receiver sensitivity test. To calculate the signal-noise ratio (SNR), subtract the noise level from the PLC signal. A lower SNR for a fixed success rate means that the receiver can tolerate more noise relative to the PLC signal. For example, a -20 dB SNR value means that the noise can be ten times larger than the PLC signal and the device will still be able to properly receive the PLC signal.

Figure 33 shows the results of the narrow-band SNR test. The SNR is less than -17 dB for frequencies that are at least 3 dB away from the PLC signal (that is, outside the range of 127 - 136 kHz). Therefore, outside of this narrow window (referred to as out-of-band SNR), the noise must be at least 5 times larger than the PLC signal in order to have a BER greater than 10^{-4}.

When the receive gain changes from 1x to 2x, the minimum out-of-band SNR increases by approximately 2 dB because the receiver amplifies the noise more and it saturates the PLC signal. When the receive gain is 4x, the minimum out-of-band SNR increases by as much as 6 dB. When the receive gain is 8x, the minimum out-of-band SNR increases by as much as 12 dB. Therefore, for most powerline environments, the receive gain should be 1x or 2x to minimize the sensitivity to noise.

Figure 33. Narrow-band Noise Immunity Test Results at 132 kHz

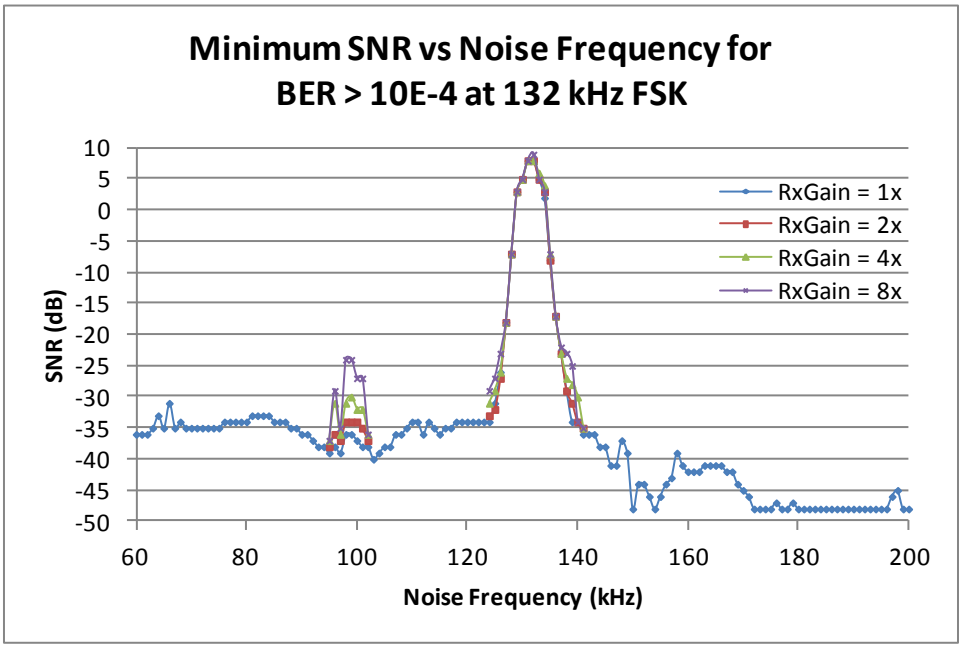

Figure 34 shows the results of the narrow-band SNR test at 110 kHz FSK. The SNR is less than -17 dB for frequencies that are at least 3 dB away from the PLC signal (that is, outside the range of 106 - 114 kHz). Therefore, outside of this narrow window (referred to as out-of-band SNR), the noise must be at least 5 times larger than the PLC signal in order to have a BER greater than 10^{-4}.

Figure 34. Narrow-band Noise Immunity Test Results at 110 kHz

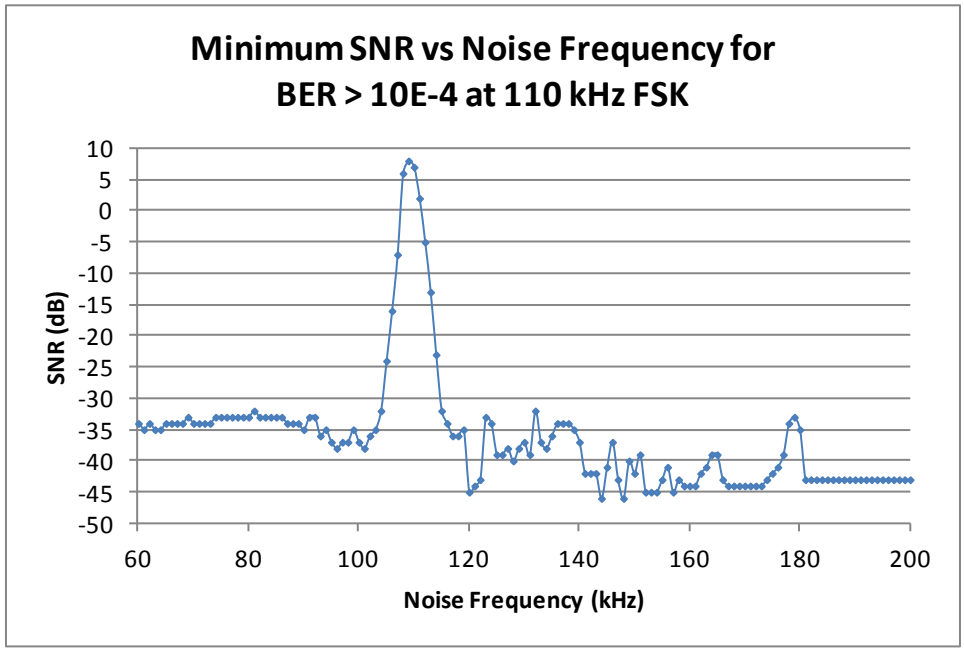

When FEC encoding is enabled, the noise immunity improves by 0 – 2 dB. Figure 35 shows the results of the narrow-band SNR test when frequency hopping is enabled. In this case, the SNR is less than -30 dB across all noise frequencies because the system automatically selects the FSK center frequency that is not near the noise frequency.

Figure 35. Narrow-band Noise Immunity Test Results with Frequency Hopping

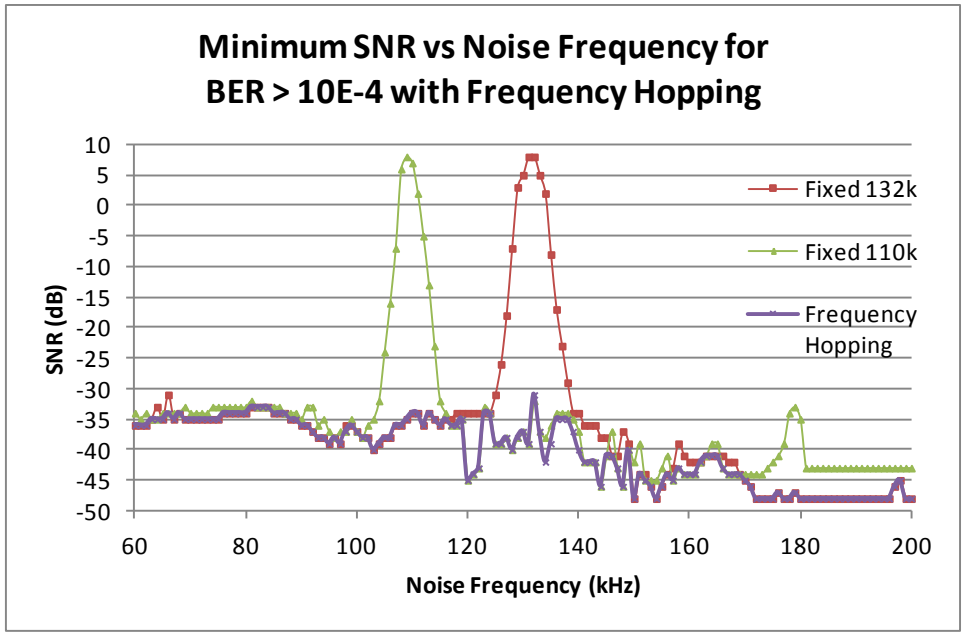

7 How to Debug PLC

In some environments, PLC communication may not be successful or the bit error rate of the system may be too high. This guide describes why this may occur and provides ways to debug it.

7.1 Causes of Poor Performance

Two factors predominantly determine performance of the PLC system:

- *Received signal amplitude.* If the signal is too small, the PLC receiver is not able to properly demodulate the signal due to its own internal noise and quantization noise.
- *Signal-to-noise ratio (SNR).* If the noise is too high, the receiver is not able to distinguish between the PLC signal and the noise.

Two primary factors can attenuate the PLC signal:

- *High impedance at the PLC frequencies (130 to 133 kHz, by default) between the transmitter and receiver*. High impedance can be caused by a long cable, a component that the signal must pass through (for example, transformer or circuit breaker), or a combination of both. Typically, houses and buildings in the United States have multiple electrical phases, which means that the PLC signal must pass through a transformer when the transmitter and receiver are on different phases.
- *Loads on the line with a low impedance at the PLC frequencies.* Examples include switching power supplies. These types of equipment often have a capacitor across line and neutral for EMI filtering or rectification. These capacitors are a low impedance load at the PLC frequency.

Figure 36. PLC Signal Path

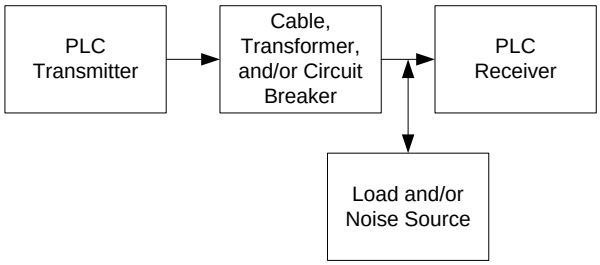

Some examples of noise sources that can degrade the PLC performance are light dimmers, switching power supplies and intercoms. Since the PLC receiver passes signals in its communication band, the worst-case noise sources are those that generate noise in the PLC frequency band. For switching power supplies, this occurs when the switching frequency or harmonics are near the PLC frequency. The signal attenuation and noise can combine to make the SNR too low for successful communication.

7.2 Methods to Improve Performance

To improve the performance, try the following:

- Change the PLC frequency. On all of the devices, change the FSK center frequency from 132 kHz to 110 kHz. This may improve the performance if there is less noise near 110 kHz than 132 kHz. In addition, since the path between the transmitter and the receiver is typically inductive, the signal is not as attenuated. When frequency hopping is enabled, the Network Protocol sets the FSK Demodulator's frequency to the frequency of the incoming signal. The application decides which FSK center frequency that it will transmit with (typically based on the success rate of receiving acknowledgments).
- Change the receiver gain by modifying the FSK Demodulator's Receive_Gain parameter or calling the FSK_Demodulator_SetRxGain function. A higher gain value improves the receiver sensitivity, but it negatively affects the SNR performance, because the noise and PLC signal can get saturated.

- Increase the transmit amplitude by reducing the FSK Modulator's Tx_Amplitude_Divider parameter or calling the FSK_Modulator_SetTxAmplitude function. This will drive a larger signal on to the powerline at the expense of higher power consumption.
- Enable FEC encoding by setting the Network Protocol's FEC_Encoding parameter or calling the Network_Protocol_EnableFec function. The Network Protocol encodes each 4-bit nibble of the packet into an 8-bit byte. If there is a single bit error in any of the bytes that are received on the other end of the line, the receiver's Network Protocol will detect and correct the erroneous bit. Therefore, it improves the communication success rate at the expense of half the throughput of the original data.
- Move the boards to be on the same electrical phase. This reduces the attenuation of the signal.
- Turn off, disconnect, or change the socket of any potential noise sources or heavy loads. To measure the effect of removing a load, measure the noise floor and the maximum FSK level while a PLC device is transmitting. If the noise floor decreases or the maximum FSK level increases when the load is removed, it is an indication that the load has a negative effect on the PLC performance. The Network_Protocol_GetNoiseFloor and Network_Protocol_GetMaxFskLevel functions return the noise floor and maximum FSK level, respectively.

For more information on how to debug the PLC link, including techniques to identify and jump across powerline phases, block heavy loads and noise sources, and characterize the noise on the line, please read the application note AN58825 - PLC - Powerline Communication Debugging Tools.

8 Code Example Evaluation

This section provides a step-by-step description of how to evaluate the attached code example using boards manufactured according to the attached design files. A guide for this board is in Appendix B: PSoC 5LP PLC Hardware User's Guide.

Figure 37 shows the PSoC Creator schematics of the code example. There are six functional blocks:

- Demo User Interface: Contains an ADC for reading an analog voltage, an LCD to display the status of the demo, and digital input pins for a push-button and 8-port DIP switch.
- External Host Interface (Optional): Contains three optional communication interfaces (I2C, RS232, and SPI) to configure the PLC system and transfer data
- FSK Demodulator, Network Protocol, FSK Modulator: Contains the three PLC components along with the recommended external circuitry schematics.
- Coupling Circuit: Shows one of the recommended circuits to couple the FSK signal to the powerline.

There are two options to evaluate the code example:

- Standalone Demo: Evaluate the code example without a PC. The press of a push-button makes the system transmit packets from one board to another over the powerline. An ADC reads an analog voltage, the PLC protocol puts the voltage in a packet, and the modem transmits the packet. An LCD displays the communication statistics and the analog voltage received over the powerline.
- External Host Interface: Evaluate the code example with the Cypress PLC Control Panel GUI on a PC. This option provides more configurability of the modem and network protocol.



CAUTION This board operates on high voltage 110 to 240 VAC lines. Use extreme caution when working with high voltage powerlines. Cover the high voltage section of the board with a protective casing to reduce the risk of shock. If there is no protective case, do not touch the board while it is plugged in.

Figure 37. PLC Code Example Schematics

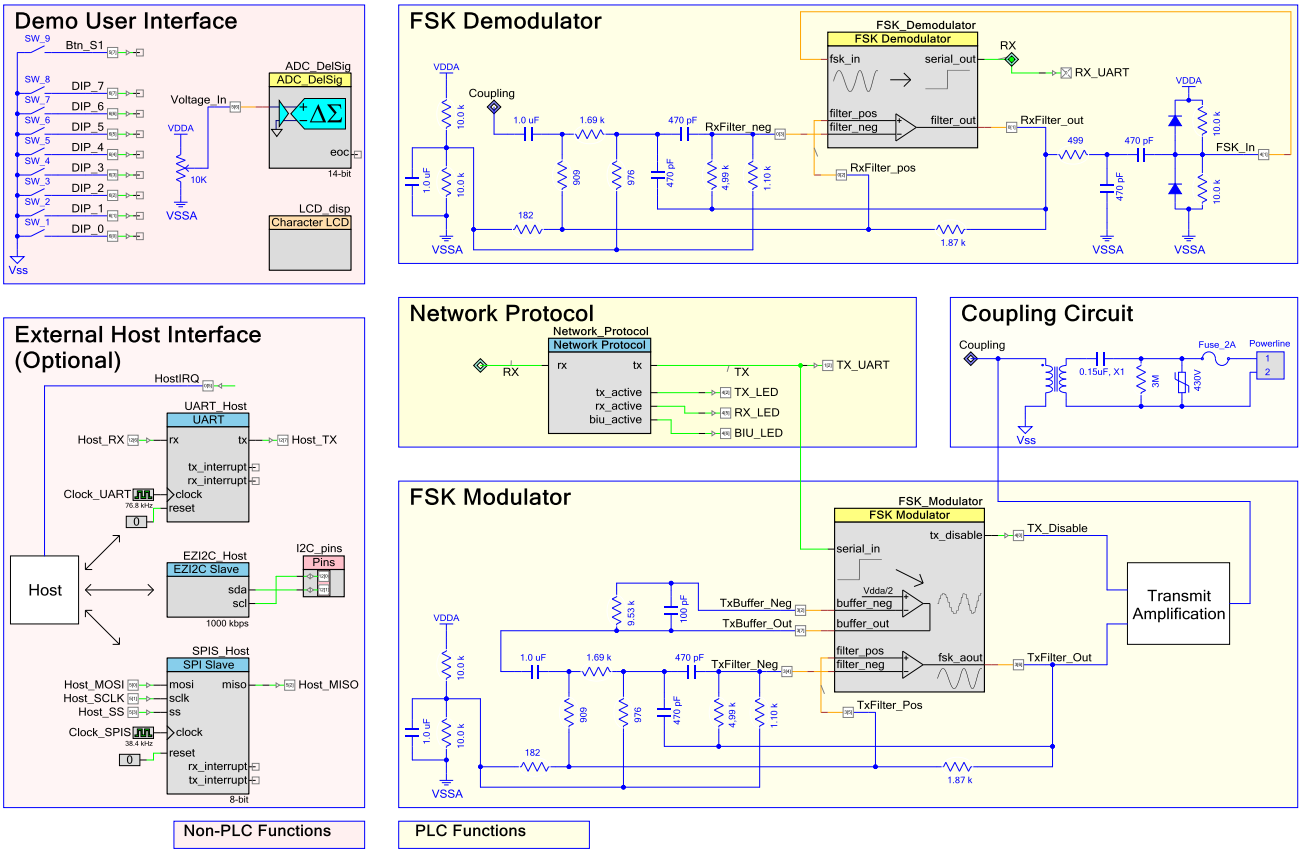

8.1 Standalone Demo Evaluation

The standalone demo option uses an LCD to:

- Provide instructions to set up the board
- Display the communication statistics
- Display the analog voltage that read from pin P5[6] and the analog voltage received in the PLC packet
- Display the local address, destination address, modem configuration, and receive signal strength

The LCD displays this information across multiple “windows”. Table 12 provides a description of each window. When there is a brief pulse (less than three seconds) on pin P5[7], the LCD displays the next window. A 14-bit ADC samples the analog voltage on pin P5[6]. The code averages and shifts the value to provide a stable 16-bit number for display on the LCD. When there is a long pulse (greater than three seconds) on pin P5[7], the device starts to transmit messages.

Table 12. LCD Display Description

LCD Window	Description
Welcome Screen	Displays version, release date, and authors
Instructions	Describes how to connect the jumper wires on the board, how to use the push-button, and the meaning of each DIP switch

LCD Window	Description
Statistics	Displays the number of transmitted packets "T=", the number of received acknowledgments "A=", the number of received packets "R=", and the value of the received data payload "D="
Receive Signal Strength (in dB)	Displays the noise floor "NF=" and the maximum signal level "M=" for each FSK center frequency. Displays an '*' beside the active frequency
Config	Displays the source address "SA=", the destination address "DA=", if FEC Encoding is enabled "FEC=", the active FSK center frequency "F=" and the receive gain "G="
TX Info	Displays the number of transmitted packets "T=", the number of received acknowledgments "A=", and the recent success rate "S="
POT Values	Displays the value of the on-board potentiometer "P=" and the value of the received data payload "D=", which is the remote device's potentiometer value
Scan Mode	Displays each of the above fields individually with a more descriptive name

Pins P6[7:0] provide control over the PLC addressing, FEC Encoding, receiver gain, FSK center frequency, and frequency hopping, as shown in Table 13. The logic is inverted to support the DIP switches on the test board.

Table 13. Port 6 Pin Mapping

Pins	Address
P6[1:0]	Local Address
P6[3:2]	Destination Address
P6[4]	FEC Encoding (1=Disabled, 0=Enabled)
P6[5]	Receiver Gain (1=0 dB, 0=6 dB)
P6[8:7]	[1, 1] = 132 kHz Center Frequency [0, 1] = 110 kHz Center Frequency [1, 0] = Frequency Hopping [0, 0] = Test Mode

8.1.1 Code Example File Structure

The code for this application example is in multiple files for better readability and portability. These files are not necessary for PLC communication; they are only for this application example. The application example files are:

- *Analog.c* Gathers and filters the streaming data from the ADC that samples pin P5[6]
- *Button.c* Handles debounce, button press detection, and press/release detection
- *LCD.c* Contains LCD helper functions
- *PLC_demo.c* Processes the received PLC packets, transmits the analog voltage when there is the button event, collects the communication statistics, and selects the best FSK center frequency (when frequency hopping is enabled)
- *State.c* Manages the user interface by processing the button events and DIP switch settings, and updating the LCD

8.1.2 Components Needed

The following components are required to evaluate the board with the standalone option. Example components shown in parenthesis.

- One AC power cable **per board**. The cable must have an IEC 320-C7 connector (Qualtek 223020-01 6 ft AC Cable).
- Two 0.1-inch spaced jumper shunts **per board** (Kobiconn 151-8030-E).
- One 16x2 LCD Module **per board** (Lumex LCM-S01602DTR/A). In order to connect this module to the board, solder a 14-pin male header onto the module first (TE Connectivity AMP Connectors 87227-7).
- One 2-inch (or longer) jumper wire **per board**.
- One CY8CKIT-002 MiniProg3 programmer with USB cable.
- A protective plastic case that covers the high voltage area (GDA Creative CLC551-NR).

8.1.3 Evaluation Steps

Follow these steps to evaluate the standalone code example:

1. On each board, place a jumper shunt across PWR and 10 V on the TXAMP header. Place a second jumper across PWR and 5 V on the FILTER header.

   These set the power rails for the transmit amplification and filters. The FILTER header must only connect to the 5 V rail. If it connects to the 10 V rail, it may damage the PSoC 5LP device.

Figure 38. Jumper Shunts for Power Rails

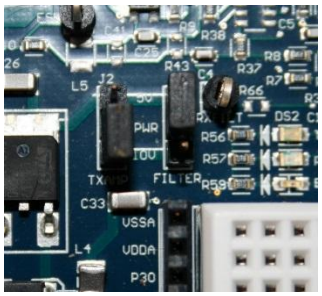

2. On each board, connect a wire from P57 to S1 and a wire from P56 to VR. S1 is a button and VR is a potentiometer.

Figure 39. Connections from P57 to S1 and P56 to VR

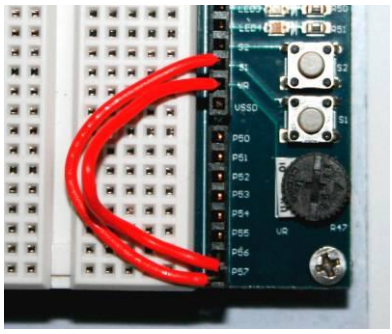

3. Connect the LCD module to the LCD1 connector on each board. The LCD should stick outwards from the board.
4. Connect power cables from the mains to each board. The blue power LED should light up.
5. Open the attached code example in PSoC Creator.

6. In *bridgeLayer.h*, set the host interface to local:

```
#define    HOST_INTERFACE HOST_LOCAL
```

7. Connect the USB cable from the PC to the MiniProg3 programmer and connect the 10-pin ribbon cable from the MiniProg3 to the programming connector on one of the PLC boards.

Figure 40. MiniProg3 Programmer Connection

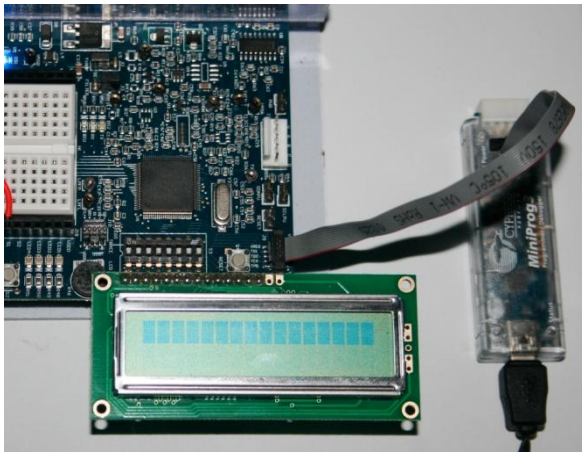

8. From PSoC Creator, select **Debug** > **Program**. If the **Select Debug Target** window appears, select the MiniProg3 item, and then click **Connect**. Click **OK**.

   The project builds and then programs the device. The Output window displays the message “Device 'PSoC 5LP CY8C5868AXI-LP035*' was successfully programmed”.

9. Connect the MiniProg3 to the other board and repeat step 8.

   The LCD on each board displays an introduction message and instructions. If nothing appears on the LCD, turn the potentiometer R46 to increase the contrast.

Figure 41. LCD Display of Programmed Board



10. The 8-port DIP switch sets some basic parameters of the PLC demo board. Table 14 shows the bit mapping.

    In most cases, the DIP switches can be left in the OFF position. Instructions also appear on the LCD in the “Config” window.

Table 14. DIP Switch Port Mapping

DIP Port	Address
[2:1]	Local Address
[4:3]	Destination Address
[5]	FEC Encoding (ON=Enabled, OFF=Disabled)
[6]	Receiver Gain (OFF=0 dB, ON=6 dB)
[8:7]	[OFF, OFF] = 132 kHz Center Frequency [ON, OFF] = 110 kHz Center Frequency [OFF, ON] = Frequency Hopping [ON, ON] = Test Mode

Figure 42. DIP Switch



11. Press button S1 to show the “Statistics” window on the LCD.
12. On one of the boards, press and hold button S1 for approximately 3 seconds.
    - The device starts to transmit messages, as indicated by the flashing green TX LED. In addition, in the “Statistics” window on the LCD, a message appears to indicate the transmission count (e.g. T=3127) and the acknowledgement count (for example, A=2754). If the amber BIU (Band-In-Use) LED turns on, then there is another PLC signal or excessive noise on the powerline. If it is noise, the device automatically attempts to adapt the threshold to be higher than the noise.
    - If the communications link is working, the destination board will receive messages. In the “Statistics” window on the LCD, a message appears to indicate the receive count (such as R=2944) and the received data (such as D=29912). The red RX LED flashes for each byte received.
    - If the link is not working, change the FSK frequency by changing DIP switches 7 and 8 for all of the boards. Also, try enabling FEC encoding by turning on DIP switch 5 or change the receiver gain by changing DIP switches 6. Refer to the How to Debug PLC section for more information and other debugging techniques.
13. To stop transmitting messages, press and hold button S1 for approximately 3 seconds. To reset the statistics, press the Reset button, which is near the programming header and LCD header.

8.2 External Host Interface Evaluation

8.2.1 Components Needed

The following components are required to evaluate the board with the PLC Control Panel GUI option. Example components shown in parenthesis.

- One PC that runs the Cypress PLC Control Panel GUI.
- One AC power cable **per board**. The cable should have an IEC 320-C7 connector (Qualtek 223020-01 6 ft AC Cable).
- Two 0.1-inch spaced jumper shunts **per board** (Kobiconn 151-8030-E).
- One CY8CKIT-002 MiniProg3 programmer with USB cable.
- At least one CY3240 USB-I2C Bridge board with USB cable. A second bridge board will allow two PLC boards to be configured and monitored at the same time.
- It is recommended to have a protective plastic case that covers the high voltage area of each board (GDA Creative CLC551-NR).

8.2.2 Evaluation Steps

Follow these steps to evaluate the code example with the GUI:

1. On each board, place a jumper shunt across PWR and 10 V on the TXAMP header. Place a second jumper across PWR and 5 V on the FILTER header.

   These set the power rails for the transmit amplification and filters. The FILTER header must only connect to the 5 V rail. If it connects to the 10 V rail, it may damage the PSoC 5LP device.

Figure 43. Jumper Shunts for Power Rails

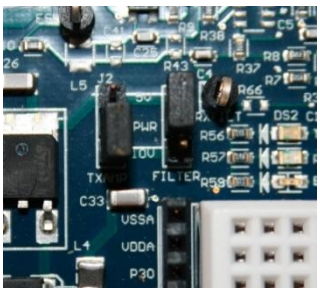

2. Connect power cables from the mains to each board.

   The blue power LED lights up.

3. Open the attached code example in PSoC Creator.

4. In *bridgelayer.h*, set the host interface to I^2C:

```
#define    HOST_INTERFACE HOST_I2C
```

5. Connect the USB cable from the PC to the MiniProg3 programmer and connect the 10-pin ribbon cable from the MiniProg3 to the programming connector on one of the demonstration boards.

Figure 44. MiniProg3 Programmer Connection

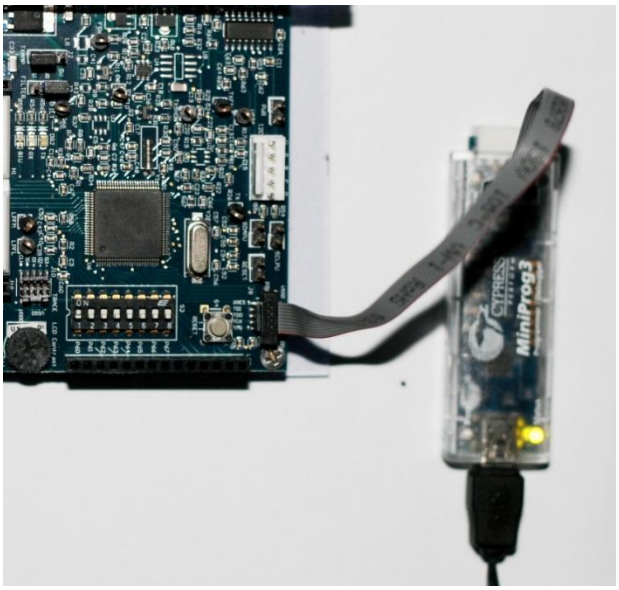

6. From PSoC Creator, select **Debug** > **Program**. If the **Select Debug Target** window appears, select the MiniProg3 item and then click **Connect**. Click **OK**.

   The project builds and programs the device.

7. Connect the MiniProg3 to the other board and repeat step 6.

8. Connect a USB cable from the PC to the CY3240 USB-I2C bridge board. Connect the CY3240 board to the PLC board's 5-pin I^2C connector.

Figure 45. CY3240 USB-I2C Bridge Connection

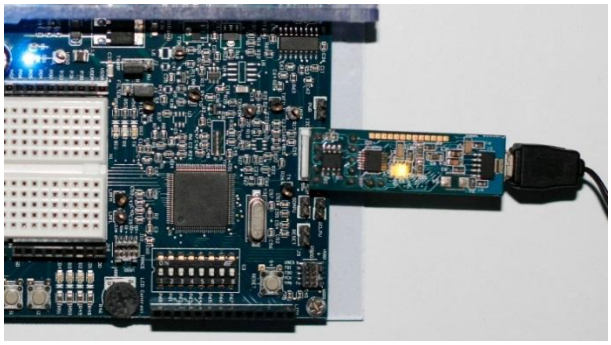

9. Open the PLC Control Panel GUI. Select **Help** > **Users Guide**. Follow the steps in section 1.3 of the user's guide to complete the evaluation. Disregard the item that says to remove all jumpers; keep the two jumper shunts on the TXAMP and FILTER headers.

9 Summary

This application note provides a complete, flexible, and easy-to-use solution that implements powerline communication (PLC) with the PSoC 5LP family of devices. Along with the attached code example and board design files, an engineer can quickly develop a robust PLC design that can be easily integrated into their system.

About the Author

Name:	Jeffrey Hushley
Title:	Applications Engineer Senior Staff
Background:	Powerline Communications, high-speed digital design, lighting protocols

A Appendix A: PLC Configuration Array

Configuration settings for the network protocol and modem are in the PLC_Config array (Table 15).

Table 15. PLC Configuration (PLC_Config) Array

Register		Bit Offset							
Offset	Register Name	7	6	5	4	3	2	1	0
0 (0x00)	IRQ_ENABLE	IRQ_CLEAR	IRQ_POLARITY	IRQ_TX_BIU_TIMEOUT	IRQ_TX_NO_ACK	IRQ_TX_NO_RESPONSE	IRQ_RX_PACKET_DROPPED	IRQ_RX_DATA_AVAILABLE	IRQ_TX_COMPLETE
1 (0x01)	LOGICAL_ADDRESS_LSB	8 - bit Logical Address / LSB for extended 16-bit address							
2 (0x02)	LOGICAL_ADDRESS_MSB	MSB for 16-bit Extended Address							
3 (0x03)	GROUP_8BIT	8-bit Group Address							
4 (0x04)	GROUP_MULTI	One Hot Encoded (e.g. if byte = 0b00010001, then member of groups #5 and #1)							
5 (0x05)	PLC_MODE	TX_ENABLE	RX_ENABLE	LOCK_CONFIG	BIU_DISABLE	RX_OVERWRITE	EXTENDED_ADDRESSING_MODE	IGNORE_DESTINATION_ADDRESS	IGNORE_CRC
6 (0x06)	TX_MESSAGE_LENGTH	TX_SEND_MESSAGE	Reserved		TX_LENGTH_MASK				
7 (0x07)	TX_CONFIG	TX_SA_TYPE_MASK	TX_DA_TYPE_MASK		TX_ACK_MODE	TX_RETRIES			
8 (0x08)	TX_DESTINATION_ADDRESS	Remote Node Destination Address (8 bytes)							
16 (0x10)	TX_COMMAND_ID	TX Command ID							
17 (0x11)	TX_DATA	TX Data (31 bytes)							
48 (0x30)	BIU_THRESHOLD_CONFIG	Reserved	BIU_AUTOSET	Reserved		BIU_THRESHOLD_MASK			
49 (0x31)	MODEM_CONFIG	Reserved	MODEM_TX_DELAY_MASK		Reserved			MODEM_BPS_MASK	
50 (0x32)	TX_AMPLITUDE	Reserved				TX_AMPLITUDE_MASK			
51 (0x33)	RX_GAIN	Reserved					RX_GAIN_MASK		
52 (0x34)	PROTOCOL_TIMING_CONFIG	BIU_INTERVAL_MIN_MASK		BIU_INTERVAL_SPAN_MASK		BIU_INSTANT_TIMEOUT	Reserved	ACK_TIMEOUT_MASK	
53 (0x35)	FSK_CONFIG	Reserved					FSK_FREQUENCY_MASK		
54 (0x36)	PROTOCOL_ENCODING_CONFIG	Reserved							
55-63 (0x37-0x3F)	Reserved	Reserved							FEC_ENABLE
64 (0x40)	RX_MESSAGE_INFO	RX_NEW_MESSAGE	RX_DA_TYPE_MASK	RX_SA_TYPE_MASK	RX_LENGTH_MASK				
65 (0x41)	RX_SOURCE_ADDRESS	Remote Node Source Address(8 Bytes)							
73 (0x49)	RX_COMMANDID	RX Command ID							
74 (0x4a)	RX_DATA	RX Data (31 bytes)							
105 (0x69)	PLC_STATUS	STATUS_VALUE_CHANGE	Reserved	STATUS_TX_BIU_TIMEOUT	STATUS_TX_NO_ACK	STATUS_TX_NO_RESPONSE	STATUS_RX_PACKET_DROPPED	STATUS_RX_DATA_AVAILABLE	STATUS_TX_COMPLETE
106 (0x6A)	PHYSICAL_ADDRESS	Physical Address (8 bytes), "0x6A -> MSB"							
114 (0x72)	FW_VERSION	Version Number							

Table 16 provides a description of each of the parameters in the PLC_Config array. The **Access** column describes whether the application should write (“W”) to that parameter or read (“R”) that parameter. When an application writes to a parameter, the protocol reads the parameter and processes it (e.g. TX_DATA). When an application should read a parameter, the protocol writes to it (e.g. RX_DATA). When a parameter is read/write (“R/W”), the protocol typically writes one value and the application writes the other value. For example, when there is a new message received, the protocol sets the parameter RX_NEW_MESSAGE to ‘1’. When the application has read all of the data from the received message, it must set the parameter RX_NEW_MESSAGE to ‘0’. This tells the protocol to clear its receive buffer and prepare to receive a new message. The application can modify parameters that have read access. For example, the application clears the PLC_STATUS byte after it has processed the event. The difference is that the protocol does not read from this byte and perform an action. It only writes to this byte when there is a new event. However, when an external host runs the application via I^2C, it must not write to the parameters that have read access because the host could write to the byte at the same time that the protocol writes to the byte. This could cause the host to overwrite a status update and miss an event. Instead, the host writes a ‘0’ to the IRQ_CLEAR parameter, which clears only the transmit status parameters in the PLC_STATUS byte. To clear the receive status parameters, the host writes a ‘0’ to the RX_NEW_MESSAGE parameter.

Table 16. PLC_Config Parameter Description

Field Name	Access	Size	Description
IRQ_ENABLE (Offset 0x00)			
IRQ_CLEAR	R/W	1	0 - When the host writes a '0' to this field, the protocol de-asserts the HostIRQ pin and clears the PLC_Status register (except for STATUS_RX_PACKET_DROPPED and STATUS_RX_DATA_AVAILABLE). 1 - When there is a new event, the protocol sets this bit to '1'.
IRQ_POLARITY	W	1	0 - The HostIRQ pin is active low. 1 - The HostIRQ pin is active high.
IRQ_TX_BIU_TIMEOUT	W	1	0 - A BIU timeout event does not affect the HostIRQ pin. 1 – The protocol asserts the HostIRQ pin when a BIU timeout event occurs.
IRQ_TX_NO_ACK	W	1	0 - An acknowledgment timeout event does not affect the HostIRQ pin. 1 - The protocol asserts the HostIRQ pin when it expects an acknowledgment but does not receive one within the time window defined by the ACK_TIMEOUT_MASK parameter.
IRQ_TX_NO_RESPONSE	W	1	0 - A response timeout event does not affect the HostIRQ pin. 1 - The protocol asserts the HostIRQ pin when it transmits a CMD_REQUEST_DATA message, but does not receive a CMD_RESPONSE_DATA message within 1.5 seconds.
IRQ_RX_PACKET_DROPPED	W	1	0 - A dropped packet event does not affect the HostIRQ pin. 1 - The protocol asserts the HostIRQ pin when it has an unread message in the buffer and a second message is received. That new message is dropped.
IRQ_RX_DATA_AVAILABLE	W	1	0 - A new received packet event does not affect the HostIRQ pin. 1 -The protocol asserts the HostIRQ pin when a new packet is received.
IRQ_TX_COMPLETE	W	1	0 - A completed transmission event does not affect the HostIRQ pin. 1 (when TX_ACK_MODE = 0) - The protocol asserts the HostIRQ pin when it transmits the complete packet. 1 (when TX_ACK_MODE = 1) - The protocol asserts the HostIRQ pin when it transmits the complete packet and it receives an acknowledgment.
PLC_MODE (0x05)			
TX_ENABLE	W	1	0 - The transmitter can transmit messages. 1 - The transmitter cannot receive messages.
RX_ENABLE	W	1	0 - The receiver can receive messages. 1 - The receiver cannot receive messages.
LOCK_CONFIG	W	1	0 – The protocol allows the configuration commands (TX_COMMAND_ID = 0x01 - 0x0F) to change the configuration (TX Enable, Ext Address, Disable BIU, Threshold Value, Logical Address, Group Membership) 1 - The protocol prevents the configuration commands from changing the configuration.
BIU_DISABLE	W	1	0 - Enables band-in-use detection. 1 - Disables band-in-use detection.

Table 16. PLC_Config Parameter Description

Field Name	Access	Size	Description
RX_OVERWRITE	W	1	0 - If the receive buffer (RX_DATA) has an unread message, the protocol drops any new messages. 1 - If the receive buffer (RX_DATA) has an unread message, the protocol overwrites the existing message with the new message.
EXTENDED_ADDRESSING_MODE	W	1	0 - 8-bit Logical Addressing mode 1 - 16-bit Extended Logical Addressing mode **Note** This mode should be the same in all the devices in the network
IGNORE_DESTINATION_ADDRESS	W	1	0 - The protocol drops the received packet if the destination address does not match the local address. 1- The protocol stores the received packet even if the destination address does not match the local address.
IGNORE_CRC	W	1	0 - The protocol drops the received message if the 8-bit CRC fails. 1- The protocol stores the received message even if the 8-bit CRC fails.
TX_MESSAGE_LENGTH (0x06)			
TX_SEND_MESSAGE	R/W	1	0 - Transmitter is idle. The protocol automatically clears this bit when: - (TX_ACK_MODE = 0) It transmits the complete packet. -(TX_ACK_MODE = 1) It transmits the complete packet and it receives the acknowledgment or the acknowledgment timeout occurs. 1 - The protocol transmits a message once the powerline is free. **Note** The application should set the TX_CONFIG, TX_DESTINATION_ADDRESS, TX_COMMAND_ID and TX_DATA registers before it sets this bit to '1'.
TX_LENGTH_MASK	W	5	The length of the data payload in TX_DATA. The payload length can be 0 to 31.
TX_CONFIG (0x07)			
TX_SA_TYPE_MASK	W	1	0 - The source address in the transmitted packet is this device's logical address (8-bit or 16-bit, depending on EXTENDED_ADDRESSING_MODE). 1 - The source address in the transmitted packet is this device's 64-bit physical address.
TX_DA_TYPE_MASK	W	2	00 - The destination address in the transmitted packet is a logical address (8-bit or 16-bit, depending on EXTENDED_ADDRESSING_MODE). 01 - The destination address in the transmitted packet is an 8-bit group address. 10 - The destination address in the transmitted packet is a 64-bit physical address. 11 - Invalid
TX_ACK_MODE	W	1	0 - After the protocol transmits a packet, it does not expect an acknowledgment. 1 - After the protocol transmits a packet, it expects the destination to transmit back an acknowledgment.
TX_RETRIES	W	4	If TX_ACK_MODE = 0, the protocol transmits the packet 1 + TX_RETRIES times. If TX_ACK_MODE = 1, the protocol re-transmits the packet up to TX_RETRIES times for each time that the ACK_TIMEOUT_MASK time expires.
TX_DESTINATION_ADDRESS (0x08 - 0x0F)			
8-bit Logical Address	W	8	Byte Offset 0x08
16-bit Logical Address	W	16	Byte Offset 0x08 – LSB Byte Offset 0x09 – MSB
64-bit Physical Address	W	64	Byte Offset 0x08 – MSB Byte Offset 0x0F – LSB
BIU_THRESHOLD_CONFIG (0x30)			
BIU_AUTOSET	R/W	1	0 - Auto Set Threshold is disabled. When the auto set threshold function completes, the protocol clears this parameter to '0'. 1 - When the protocol is idle, the protocol sets the BIU threshold (BIU_THRESHOLD_MASK) to the lowest value that does not cause a BIU detection.
BIU_THRESHOLD_MASK	W	4	Band-In-Use (BIU) detection threshold. When a signal is higher than the following level for at

Table 16. PLC_Config Parameter Description

Field Name	Access	Size	Description
			least 4 ms, a BIU detection event occurs and the timer restarts. 0000 - 43 dBµVrms 0001 - 50 dBµVrms 0010 - 57 dBµVrms 0011 - 63 dBµVrms 0100 - 69 dBµVrms 0101 - 75 dBµVrms 0110 - 82 dBµVrms 0111 - 85 dBµVrms 1000 - 88 dBµVrms 1001 - 91 dBµVrms 1010 - 94 dBµVrms 1011 - 97 dBµVrms 1100 - 100 dBµVrms 1101 - 103 dBµVrms 1110 - 106 dBµVrms 1111 - 109 dBµVrms
MODEM_CONFIG (0x31)			
MODEM_TX_DELAY_MASK	W	1	Before the transmitter sends the packet, it drives the logic '1' FSK frequency for the following amount of time, so that the receiver's UART can clear its buffer and be ready for the packet. **Note** This value is automatically set when the application changes the baud rate (2400 bps => 7 ms, 1800 bps => 13 ms, 1200 bps => 19 ms, 600 bps => 25 ms). A lower value is not recommended. 00 - 7 ms 01 - 13 ms 10 – 19 ms 11 – 25 ms
MODEM_BPS_MASK	W	2	Baud Rate: 00 - 600 bps 01 - 1200 bps 10 - 1800 bps 11 – 2400 bps (default)
TX_AMPLITUDE (0x32)			
TX_AMPLITUDE_MASK	W	4	Transmit Amplitude: 0000 - (-46 dB) 0001 - (-42 dB) 0010 - (-40 dB) 0011 - (-36 dB) 0100 - (-34 dB) 0101 - (-30 dB) 0110 - (-28 dB) 0111 - (-24 dB) 1000 - (-22 dB) 1001 - (-18 dB) 1010 - (-16 dB) 1011 - (-12 dB) 1100 - (-10 dB) 1101 - (-6 dB) (default) 1110 - (-4 dB) 1111 - (0 dB)

Table 16. PLC_Config Parameter Description

Field Name	Access	Size	Description
RX_GAIN (0x33)			
RX_GAIN_MASK	W	4	Receive Amplifier Gain: 0000 - 1x 0001 - 2x 0010 - 4x 0011 - 8x 0100 - 16x 0101 - 24x 0110 - 32x 0111 - 48x 1000 - 50x
PROTOCOL_TIMING_CONFIG (0x34)			
BIU_INTERVAL_MIN_MASK	W	2	Minimum time of the random interval for BIU detection: 00 – 85 ms 01 – 50 ms 10 – 20 ms 11 – 10 ms
BIU_INTERVAL_SPAN_MASK	W	2	Span from the minimum to the maximum time of the random interval for BIU detection: 00 – 30 ms 01 – 15 ms 10 – 1 ms
BIU_INSTANT_TIMEOUT	W	1	The maximum amount of time to wait for the line to be free: 0 – 1.1 second timeout 1 – Timeout on first BIU detection
ACK_TIMEOUT_MASK	W	2	The maximum amount of time to wait for an acknowledgment to be received. The "Auto +" settings mean that the protocol calculates the expected time that it takes for the acknowledgment to be transmitted back. This is based on the acknowledgment's packet length and baud rate. 00 – 500 ms 01 – Auto + 100 ms 10 – Auto + 50 ms 11 – Auto + 20 ms
FSK_CONFIG (0x35)			
FSK_FREQUENCY_MASK	W	4	FSK Carrier Frequency: 1011 – Logic '0' = 111.1 kHz, Logic '1' = 109.1 kHz 1101 – Logic '0' = 133.3 kHz, Logic '1' = 130.4 kHz (default) All other values – Reserved
PROTOCOL_ENCODING_CONFIG (0x36)			
FEC_ENABLE	W	1	0 – The protocol does not perform FEC encoding on the transmitted packets. 1 – The protocol performs FEC encoding on the transmitted packets.
RX_MESSAGE_INFO (0x40)			
RX_NEW_MESSAGE	R/W	1	0 - The protocol does not have an unread message in its buffer. 1 - The protocol has an unread message in its buffer. **Note** The application must set this bit to '0' after it reads the RX Message. This allows the protocol to receive a new RX message. This also clears the STATUS_RX_PACKET_DROPPED and STATUS_RX_DATA_AVAILABLE flags.
RX_DA_TYPE_MASK	R	1	0 - The remote transmitter sent this received packet directly to this device. 1 - The remote transmitter sent this received packet to a group.
RX_SA_TYPE_MASK	R	1	0 - The source address in the received packet is the source's logical address (8-bit or 16-bit, depending on EXTENDED_ADDRESSING_MODE).

Table 16. PLC_Config Parameter Description

Field Name	Access	Size	Description
			1 - The source address in the received packet is the source's 64-bit physical address.
RX_LENGTH_MASK	R	5	The length of the data payload in RX_DATA from 0 to 31
RX_SOURCE_ADDRESS (0x41 - 0x48)			
8-bit Logical Address	R	8	Byte Offset 0x41
16-bit Logical Address	R	16	Byte Offset 0x41 – LSB Byte Offset 0x42 – MSB
64-bit Physical Address	R	64	Byte Offset 0x41 – MSB Byte Offset 0x48 – LSB
PLC_STATUS (0x69)			
Note: When there is an external host, the protocol clears this register (except for STATUS_RX_DATA_AVAILABLE) when the application sets INT Clear to Logic 0. Otherwise, the application can clear any of these parameters with a direct memory write to this byte.			
STATUS_VALUE_CHANGE	R	1	0 - No new events have occurred. 1 - A new event has occurred.
STATUS_TX_BIU_TIMEOUT	R	1	0 - No band-in-use timeout event has occurred. 1 - A band-in-use timeout event has occurred.
STATUS_TX_NO_ACK	R	1	0 - No ACK timeout event has occurred. 1 - The protocol expected an acknowledgment (TX_ACK_MODE = 1), but it didn't receive one within the time window defined by the ACK_TIMEOUT_MASK parameter.
STATUS_TX_NO_RESPONSE	R	1	0 (When the protocol transmitted a CMD_REQUEST_DATA message and STATUS_TX_COMPLETE = 1) - The protocol received a CMD_RESPONSE_DATA message within 1.5 seconds. 0 (Otherwise) - The protocol did not expect a response. 1 - The protocol transmitted a CMD_REQUEST_DATA message, but it did not receive a CMD_RESPONSE_DATA message within 1.5 seconds.
STATUS_RX_PACKET_DROPPED	R	1	0 - The protocol did not drop any received packets. 1 - The protocol dropped a receive packet, because there is an unread message in the receiver's buffer and the RX_OVERWRITE parameter is '0'.
STATUS_RX_DATA_AVAILABLE	R	1	0 - The protocol does not have an unread message in its buffer. 1 - The protocol has an unread message in its buffer.
STATUS_TX_COMPLETE	R	1	0 - The protocol is not transmitting or has not completed transmitting the packet. 1 (TX_ACK_MODE = 0) - The protocol transmitted the complete packet. 1 (TX_ACK_MODE = 1) - The protocol transmitted the complete packet, and it received an acknowledgment.

B Appendix B: PSoC 5LP PLC Hardware User's Guide

This section describes how to use the features of the PSoC 5LP PLC test board. The attached design files can be used to manufacture this board. .

CAUTION This board operates on high voltage 110 to 240 VAC lines. Use extreme caution when working with high voltage powerlines. Cover the high voltage section of the board with a protective casing to reduce the risk of shock. If there is no protective case, do not touch the board while it is plugged in.

Figure 46. PSoC 5LP PLC Test Board Annotated

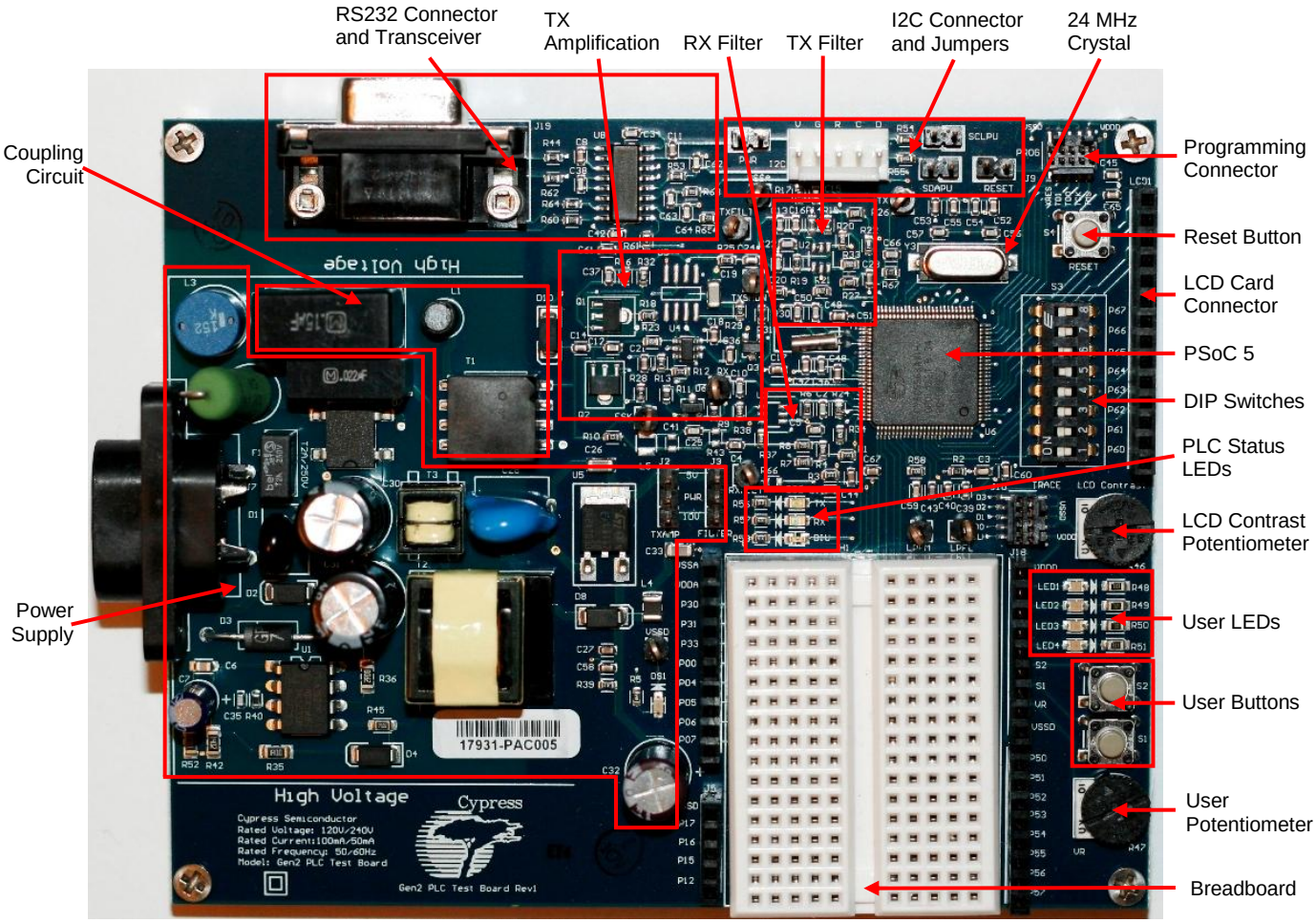

B.1 Board Component Description

This section provides a description of the different components on the board and explains how to use them.

B.1.1 PLC Filters, Amplification, and Test Points

Figure 47 shows the PLC filters and amplification circuits. The transmit filter is in the top right quadrant, the receive filter is in the bottom right quadrant, and the transmit amplifier is on the left side. The test points (listed in order from the top of the figure to the bottom) are:

- VSSA: A clean analog ground reference
- TX: The output from the PSoC 5LP's opamp I-V buffer. It is the input to the transmitter's low-pass notch filter.
- TXFILT: The output of the transmitter's low-pass notch filter.
- TXSHDN: The signal from the PSoC 5LP that controls the state of the transmit amplifier. When it is HIGH, the amplifier is placed in a high-impedance state.
- RX: The output of the receiver's filters. It connects directly to the receiver input of the PSoC 5LP.
- FSK: The point that connects the transmitter and receiver with the coupling circuit.
- RXFILT: With the existing board configuration, this test point is the same as the FSK test point.

Figure 47. PLC Filters, Amplification, and Test Points

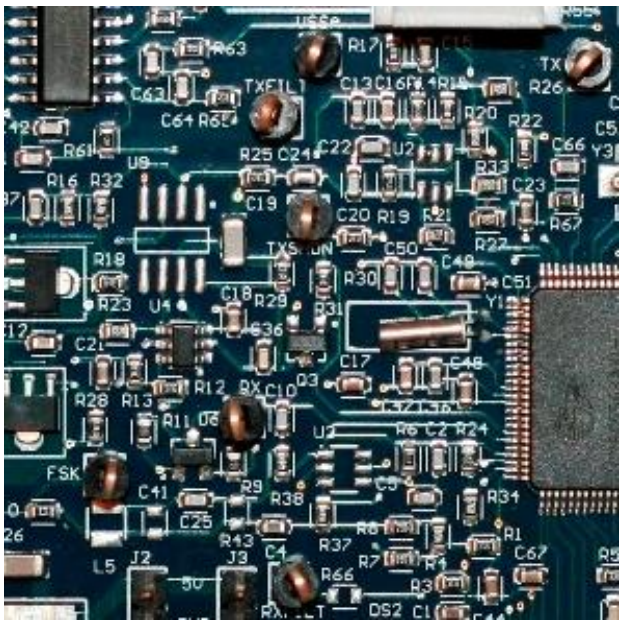

B.1.2 PLC Indicator LEDs

There are three LEDs to indicate the status of the PLC system (Figure 48):

- TX (Green LED): The device is transmitting a PLC signal on the powerline.
- RX (Red LED): The device received a valid byte of data and stored it in the buffer. A valid byte of data means that the data matches the PLC packet structure. The protocol must receive the preamble before the RX LED turns on. If the destination address matches the local address, the RX LED stays on until the device receives the last byte or an invalid byte.

- BIU (Amber LED): The device is trying to acquire the powerline and detected a band-in-use condition. If the acquisition timeout expires and the line is still busy, this LED stays on until the device makes the next attempt and the line is free.

Figure 48. PLC Indicator LEDs

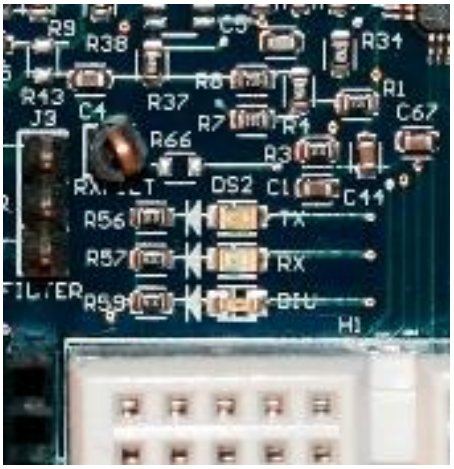

B.1.3 Power Supply and Power Select Headers

The power supply generates a 10 V rail from the AC line. A linear regulator generates a 5 V rail from the 10 V rail,. The transmit amplifier can operate off a 5 V to 12 V rail. The board provides the option to select either a 5 V rail or 10 V rail, using a jumper shunt on the TXAMP header, as shown in Figure 49 (set to 10 V). To reduce the number of power rails, it can be set to 5 V to evaluate the performance. A lower power rail results in a lower maximum amplitude transmit signal and more distortion at high amplitudes (>1 Vp-p). Therefore, it is preferable to use the 10 V supply rail for the best performance and to meet compliance standards.

With the current configuration of the board, the transmit filter must always operate off the 5 V rail. The current configuration uses the PSoC 5LP opamp as the transmit filter and the PSoC 5LP device can only operate up to 5.5 V. Therefore, the jumper shunt must always be across 5 V and PWR, as shown in Figure 49.

B.1.4 Programming Connector and Reset

The board has a MiniProg 3 programming connector to program the firmware into the PSoC 5LP device (Figure 50). The connector has a notch so that there is only one way to insert the programmer cable.

When the reset button is pressed, it resets the PSoC 5LP device.

Figure 49. Power Select headers

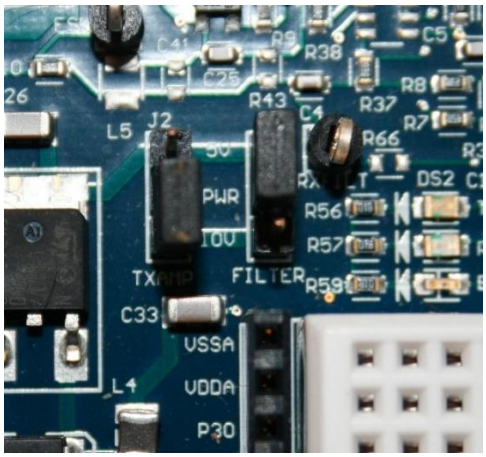

Figure 50. Programming Connector and Reset



B.1.5 I2C Connector and Jumpers

The I²C connector connects a CY3240 USB-I2C Bridge board from a PC to the PLC board. The Cypress PLC Control Panel GUI can configure the PLC board to transmit and receive messages. The Cypress PLC Control Panel GUI can be downloaded here.

The attached code example supports an I²C interface via pins P12[0] and P12[1] for SCL and SDA, respectively. These pins are hardwired to the I²C connector. The EZI2Cs component transmits and receives the data.

The I²C connector can also connect to any other board via I²C (up to 400 kbps). As shown in Figure 51, the 5-pin connector is labeled as follows (from left to right):

- V: 5 V power, which can be supplied to an external board (up to 20 mA). The PWR jumper must have a shunt across its pins.
- G: Ground.
- R: Reset. When the RESET jumper has a shunt across its pins, this pin will allow an external board to reset the PSoC 5LP device.
- C: I2C SCL (Clock)
- D: I2C SDA (Data)

There are four jumpers associated with the I²C connector (from left to right in Figure 51):

- PWR: When the user places a jumper shunt on it, the 5 V rail connects to the V pin on the I²C connector. It can supply up to 20 mA to an external board.
- SCLPU: When the user places a jumper shunt on it, the I²C SCL line connects to a pull-up resistor, which is required for I²C communication. If the external board already has a pull-up resistor (as with the CY3240 USB-I2C bridge), then a shunt is not necessary.
- SDAPU: When the user places a jumper shunt on it, the I²C SDA line connects to a pull-up resistor, which is required for I²C communication. If the external board already has a pull-up resistor (as with the CY3240 USB-I2C bridge), then a shunt is not necessary.
- RESET: When the user places a jumper shunt on it, the R pin on the I²C connector connects directly to the RESET pin on the PSoC 5LP device.

Figure 51. I²C Connector and Jumpers



B.1.6 RS232 Connector

This connector provides the ability to connect an external system to the PSoC 5LP device via an RS232 interface. The board has an RS232 transceiver for level translation and a standard DB-9 female connector, as shown in Figure 52.

The attached code example supports an RS232 interface via pins P12[7] and P12[6] for TX and RX, respectively. These pins are hardwired to the RS232 transceiver. The Host_UART component transmits and receives the data.

Figure 52. RS232 Connector

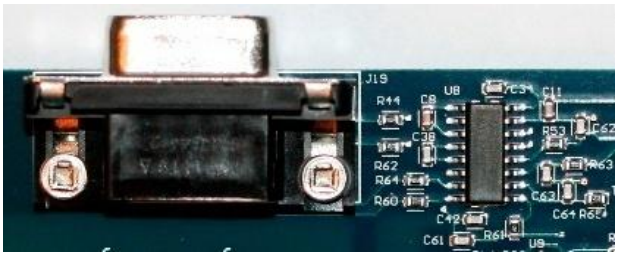

B.1.7 Prototyping Area and GPIO Headers

The prototyping area includes a breadboard and headers to access most of the available GPIOs from the PSoC 5LP device, as shown in Figure 53. The GPIO pins are:

- VSSA: A clean analog ground
- VDDA: A clean analog 5 V power rail
- VSSD: Digital ground
- VDDD: Digital 5 V power rail
- Pxy: Port pin P[x]y (for example P30 is P3[0]). Port 0 and Port 3 pins have the following additional capabilities:
  - P30, P31, P06, P07: Can be IDAC outputs
  - P00, P04, P05: Can be opamp pins
- A description of the other pins is in the next section.

Figure 53. Breadboard and GPIO Headers

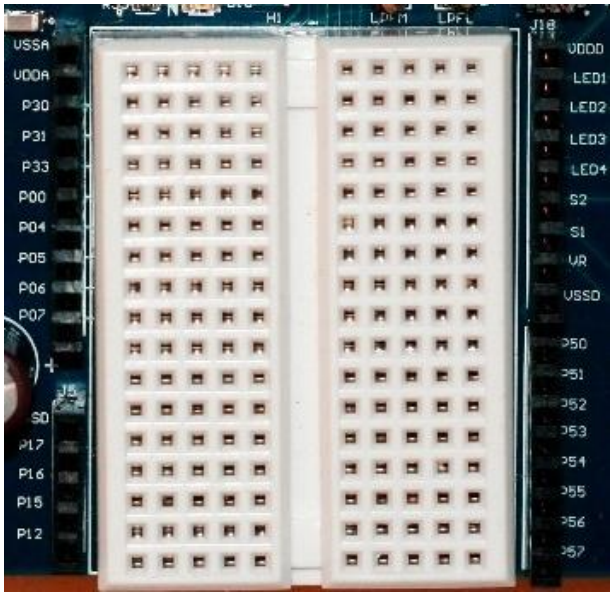

B.1.8 LEDs , Push-buttons, and Potentiometer

The board has LEDs, push buttons, and a potentiometer to evaluate the system with some user I/Os. As shown in Figure 54, there are four red LEDs (LED1 – LED4), two push buttons (S2, S1), and a potentiometer (R47). These can connect to the PSoC 5LP device with a jumper wire from the associated header pin to one of the GPIO pins (for example, from S1 to P57).

The LEDs are active HIGH. When the push-button is pressed, it connects the signal to ground. When not pressed, the signal is left floating. Therefore, the PSoC 5LP pin that connects to this push-button has a resistive pull-up drive mode. The potentiometer provides an analog voltage from 0 to 5 V.

Figure 54. LEDs, Push-buttons, and Potentiometer



B.1.9 DIP Switch

The 8-port DIP switch provides a quick way to set a value (for example, a PLC address). When the DIP switch is in the ON position, it connects the signal to ground. When the DIP switch is in the OFF position, the signal is left floating. Therefore, the PSoC 5LP pin has a resistive pull-up drive mode. Also, the logic is inverted so that ON means logic ‘1’.

The DIP switch is hardwired to port 6 of the PSoC 5LP device. Figure 55 shows the mapping where DIP switch 1 connects to P60, and so on.

Figure 55. DIP Switch



B.1.10 LCD Card Connector and Contrast Dial

The LCD card connector allows a connection to an LCD module, so that the PSoC 5LP device can easily display information to the user (with the PSoC Creator LCD component). The LCD contrast dial is a potentiometer that sets the contrast level of the LCD module. Figure 56 shows the connector and contrast dial.

Figure 56. LCD Card Connector and Contrast Dial



The Lumex LCM-S01602DTR/A LCD Module is compatible with this LCD connector and the PSoC Creator LCD component. It can be purchased here. To connect this module to the board, solder a 14-pin male header to the module first. This can be purchased here. The LCD card is attached to the board, as shown in Figure 57.

Figure 57. LCD Card Attached

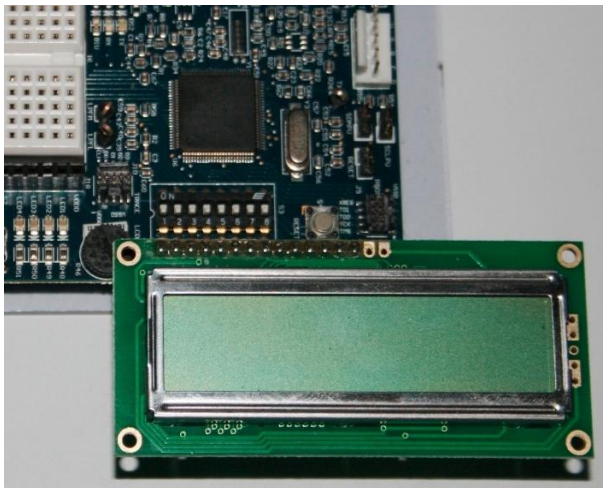

Document History

Document Title: AN76458 - PSoC® 5LP High Voltage (120-240 VAC) Powerline Communication Solution

Document Number: 001-76458

Revision	ECN	Orig. of Change	Submission Date	Description of Change
**	3702581	FRE	08/08/2012	New Spec.
*A	3820054	FRE	11/27/2012	Updated Associated Part Family to “CY8C56xx/CY8C58xx “. Updated Software Version to “PSoC Creator™ 2.1 SP1”. Replaced PSoC 5 with PSoC 5LP in all instances across the document.
*B	3934223	FRE	02/21/2013	Modularized the PLC firmware into three components (FSK Modulator, FSK Demodulator, and Network Protocol) and moved the details of these components to their new component data sheets (located in the code example) Added two features: frequency hopping and receive signal strength indicator (RSSI). Added support for these features into the demo of the code example Added control of FEC Encoding in the code example Updated the results in the Performance section for the new design Added “High Voltage (120-240 VAC)” to the title Updated Software Version to “PSoC Creator™ 2.2”.
*C	4107850	MKEA	08/27/2013	Project corrected to incorporate the modularized PLC firmware from revision *B.
*D	4540443	DRSW	10/30/2014	Updated out of date contact information and document references.
*E	4985961	BOO	12/11/2015	Updated project to PSoC Creator 3.3 and fixed issues that generated warnings Removed reference to low voltage app note that was not produced Removed 3rd party hyperlinks Updated to single column format
*F	5700387	AESATMP9	04/26/2017	Updated logo and copyright.

Worldwide Sales and Design Support

Cypress maintains a worldwide network of offices, solution centers, manufacturer's representatives, and distributors. To find the office closest to you, visit us at Cypress Locations.

Products

ARM® Cortex® Microcontrollers	cypress.com/arm
Automotive	cypress.com/automotive
Clocks & Buffers	cypress.com/clocks
Interface	cypress.com/interface
Internet of Things	cypress.com/iot
Memory	cypress.com/memory
Microcontrollers	cypress.com/mcu
PSoC	cypress.com/psoc
Power Management ICs	cypress.com/pmic
Touch Sensing	cypress.com/touch
USB Controllers	cypress.com/usb
Wireless Connectivity	cypress.com/wireless

PSoC® Solutions

PSoC 1 | PSoC 3 | PSoC 4 | PSoC 5LP | PSoC 6

Cypress Developer Community

Forums | WICED IOT Forums | Projects | Videos | Blogs | Training | Components

Technical Support

Cypress.com/support

All other trademarks or registered trademarks referenced herein are the property of their respective owners.

Cypress Semiconductor
198 Champion Court
San Jose, CA 95134-1709

© Cypress Semiconductor Corporation, 2012-2017. This document is the property of Cypress Semiconductor Corporation and its subsidiaries, including Spansion LLC ("Cypress"). This document, including any software or firmware included or referenced in this document ("Software"), is owned by Cypress under the intellectual property laws and treaties of the United States and other countries worldwide. Cypress reserves all rights under such laws and treaties and does not, except as specifically stated in this paragraph, grant any license under its patents, copyrights, trademarks, or other intellectual property rights. If the Software is not accompanied by a license agreement and you do not otherwise have a written agreement with Cypress governing the use of the Software, then Cypress hereby grants you a personal, non-exclusive, nontransferable license (without the right to sublicense) (1) under its copyright rights in the Software (a) for Software provided in source code form, to modify and reproduce the Software solely for use with Cypress hardware products, only internally within your organization, and (b) to distribute the Software in binary code form externally to end users (either directly or indirectly through resellers and distributors), solely for use on Cypress hardware product units, and (2) under those claims of Cypress's patents that are infringed by the Software (as provided by Cypress, unmodified) to make, use, distribute, and import the Software solely for use with Cypress hardware products. Any other use, reproduction, modification, translation, or compilation of the Software is prohibited.

TO THE EXTENT PERMITTED BY APPLICABLE LAW, CYPRESS MAKES NO WARRANTY OF ANY KIND, EXPRESS OR IMPLIED, WITH REGARD TO THIS DOCUMENT OR ANY SOFTWARE OR ACCOMPANYING HARDWARE, INCLUDING, BUT NOT LIMITED TO, THE IMPLIED WARRANTIES OF MERCHANTABILITY AND FITNESS FOR A PARTICULAR PURPOSE. To the extent permitted by applicable law, Cypress reserves the right to make changes to this document without further notice. Cypress does not assume any liability arising out of the application or use of any product or circuit described in this document. Any information provided in this document, including any sample design information or programming code, is provided only for reference purposes. It is the responsibility of the user of this document to properly design, program, and test the functionality and safety of any application made of this information and any resulting product. Cypress products are not designed, intended, or authorized for use as critical components in systems designed or intended for the operation of weapons, weapons systems, nuclear installations, life-support devices or systems, other medical devices or systems (including resuscitation equipment and surgical implants), pollution control or hazardous substances management, or other uses where the failure of the device or system could cause personal injury, death, or property damage ("Unintended Uses"). A critical component is any component of a device or system whose failure to perform can be reasonably expected to cause the failure of the device or system, or to affect its safety or effectiveness. Cypress is not liable, in whole or in part, and you shall and hereby do release Cypress from any claim, damage, or other liability arising from or related to all Unintended Uses of Cypress products. You shall indemnify and hold Cypress harmless from and against all claims, costs, damages, and other liabilities, including claims for personal injury or death, arising from or related to any Unintended Uses of Cypress products.
Cypress, the Cypress logo, Spansion, the Spansion logo, and combinations thereof, WICED, PSoC, CapSense, EZ-USB, F-RAM, and Traveo are trademarks or registered trademarks of Cypress in the United States and other countries. For a more complete list of Cypress trademarks, visit cypress.com. Other names and brands may be claimed as property of their respective owners.