AN75511

PSoC® 3 and PSoC 5LP – Temperature Measurement with Thermocouples

Author: Todd Dust

Associated Part Family: PSoC 3 and PSoC 5LP

Related Code Examples: For a complete list, click here.

Related Application Notes: For a complete list, click here.

To get the latest version of this application note, please visit http://www.cypress.com/AN75511.

AN75511 explains the theory of temperature measurement with a thermocouple, and shows how to do so with a single PSoC 3 or PSoC 5LP device – there is no need for external ADCs or amplifiers. To make it easy to calculate temperature from ADC readings, PSoC Creator provides a thermocouple Component. Code examples CE219905 and CE219929 demonstrate thermocouple measurement using PSoC 3 or PSoC 5LP devices.

Contents

1 Introduction....2
2 Thermocouples – Theory of Operation....3
2.1 Thermoelectric Effect....3
2.2 Thermo-emf to Temperature....4
2.3 Cold Junction Compensation....5
2.4 Measuring Thermo-emf....6
3 Voltage-to-Temperature Conversion....7
3.1 Thermocouple Component....7
4 Thermocouple Measurement with PSoC....8
5 Multiple Thermocouples....10
6 PSoC Thermocouple Measurement Performance....10
6.1 Temperature Resolution....10
6.2 Temperature Accuracy....11
6.3 Temperature Test....13
6.4 Thermocouple Signal Chain Test....13
7 Summary....15
8 Related Application Notes....15
9 Related Code Examples....15

1 Introduction

Temperature is one of the most common and frequently measured environmental variables. Temperature measurement is typically done using one of four sensors: thermocouple, thermistor, diode, or resistance temperature detector (RTD). The primary criteria for choosing a sensor are cost, accuracy, and temperature range. Table 1 offers a comparison of four types of sensors.

Table 1. Comparison of Temperature Sensors

Parameter	RTD	Thermocouple	Thermistor	Diode
Temperature range (0 °C)	–200 to +850	–250 to +2350	–100 to +300	–50 to +150
Sensitivity at 25 °C	0.387 Ω/°C	40 µV/°C (K-type)	416 Ω/°C	250 µV/°C
Accuracy	High	Medium to High	Medium	Low
Linearity	Good	Fair	Poor	Good
Typical cost (US $)	$3–$80	$3–$15	$0.2–$10	<$0.2
Typical distance of sensing	Surface mount for on-board temperature 3- and 4-wire up to a few hundred meters	<100 meters	Surface mount for on-board temperature Leaded for <1 meter	On-board temperature
Resource requirement	Excitation current, amplifier, ADC, reference resistor	Amplifier, ADC, voltage reference, and another temperature sensor for cold junction	Excitation current, ADC, reference resistor	Excitation current, amplifier, ADC
Response time	Slow	Fast	Fast	Slow
Computational complexity (best possible accuracy)	High	Very high	Very high	Medium
Cypress Application Note	AN70698	AN75511	AN66477	AN60590

Thermocouples have the largest temperature measurement range and are one of the most rugged temperature sensors making them the first choice for use in industrial and corrosive environments. This application note focuses on the K-Type thermocouple.

This application note covers only PSoC 3 and PSoC 5LP devices. The PSoC 4 family of devices does not have the required analog performance to do accurate thermocouple measurements.

2 Thermocouples – Theory of Operation

2.1 Thermoelectric Effect

In 1821, Seebeck, an Estonian-German physicist, discovered that when two dissimilar metals are connected, as shown in Figure 1(a), and one of the junctions is heated, there is a continuous flow of current through the loop. When the loop is broken, a voltage is created (see Figure 1(b)); the measured voltage is directly proportional to the temperature difference between junction 1 and junction 2. This phenomenon is called the thermoelectric effect or Seebeck effect. The junction where heat is applied is called the hot or measurement junction. The other junction is called the cold junction or reference junction, and the voltage developed (V) is called thermo-emf.

Figure 1(a). Thermocouple – Seebeck Effect

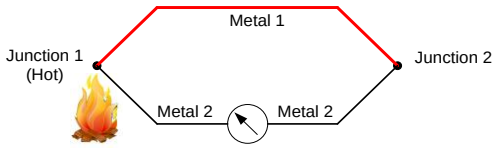

Figure 1(b). Thermocouple – Seebeck Effect

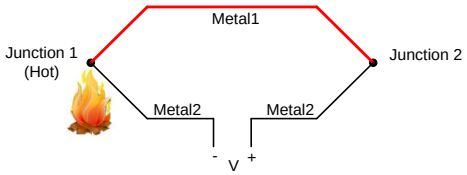

The thermo-emf depends on the following:

- Metals used at the junction
- The temperature difference between the hot (measurement) and cold (reference) junctions
- The absolute value of the cold junction temperature; that is, the thermo-emf produced for hot junction temperature of 100 °C and cold junction temperature of 0 °C will be different from the thermo-emf produced for hot junction temperature of 800 °C and cold junction temperature of 700 °C even though the temperature difference in both cases is 100 °C.

Depending on the types of metals used, thermocouples can be classified into multiple types. The types of thermocouples differ in their operational temperature range, and sensitivities (voltage change per unit change in temperature, V/°C). Two major standards, IEC EN 60584-2 and ASTM E230, govern the thermocouple tolerance. The tolerance specifies the maximum error due to replacing one thermocouple with another of the same type.

Table 1 lists some popular thermocouple types, their metal combination, temperature ranges, sensitivities, and tolerances according to the ASTM standard. ASTM establishes two thermocouple tolerance standards: standard and special.

Table 2. Thermocouple Types

Thermocouple Type	Metal Content in Positive Leg	Metal Content in Negative Leg	Temp Range (°C)	Sensitivity at 25 °C (µV/°C)	Tolerance (ASTM)		
					Temp Range (°C)	Standard	Special
B	70.4% Platinum (Pt), 29.6% Rhodium (Rh)	93.9% Pt, 6.1% Rh	0–1820	0	800–1700	0.5%	
E	90% Nickel (Ni), 10% Chromium (Cr)	55% Copper (Cu), 45% Ni	-270–1000	61	-200–0	1.7 °C or 1%	
					0–900	1.7 °C or 0.5%	1°C or 0.4%
J	99.5% Iron (Fe)	55% Cu, 45% Ni	-210–1200	52	0–750	2.2 °C or 0.75%	1.1 °C or 0.4%
K	90% Ni, 10% Cr	95% Ni, 5% Various elements	-270–1372	41	-200–0	2.2 °C or 2%	
					0–1250	2.2 °C or 0.75%	1.1 °C or 0.4%
N	84.4% Ni, 14.2% Cr, 1.4% Silicon	95.5% Ni, 4.4% Si	-270–1300	26	-270–0	2.2 °C or 2%	
					0–1300	2.2 °C or 0.75%	1.1 °C or 0.4%
R	87% Pt, 13% Rh	100% Pt	-50–1768	6	0–1450	1.5 °C or 0.25%	0.6 °C or 0.1%
S	90% Pt, 10% Rh	100% Pt	-50–1768	6	0–1450	1.5 °C or 0.25%	0.6 °C or 0.1%
T	100% Cu	55% Cu, 45% Ni	-270–400	41	-200–0	1 °C or 1.5%	
					0–350	1 °C or 0.75%	0.5 °C or 0.4%

2.2 Thermo-emf to Temperature

The process of converting thermo-emf voltage to temperature requires the use of complex equations. To provide standardization and ease of converting thermo-emf voltage to temperature, the National Institute of Standards and Technology (NIST) provides tables of thermo-emf voltage versus hot junction temperature for all thermocouple types. NIST also provides polynomial coefficients so that equations can be used to convert thermo-emf voltage to temperature. The tables and equations provided by NIST assume that the cold junction temperature is 0 °C, this assumption is made as this causes the thermo-emf voltage at 0 °C to be 0 V.

Typically, an ice bath provides the 0 °C reference temperature. Figure 2 shows a K-type thermocouple heated at one junction and maintained at 0 °C at the other junction. Figure 3 shows the thermo-emf versus hot junction temperature graph for a K-type thermocouple with cold junction at 0 °C.

Figure 2. K-type Thermocouple with Cold Junction at 0 °C

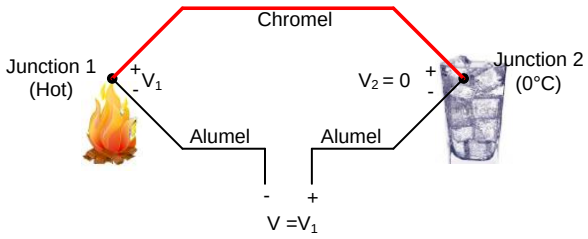

Figure 3. Thermo-emf versus Temperature for K-type Thermocouple (Cold Junction at 0 °C)

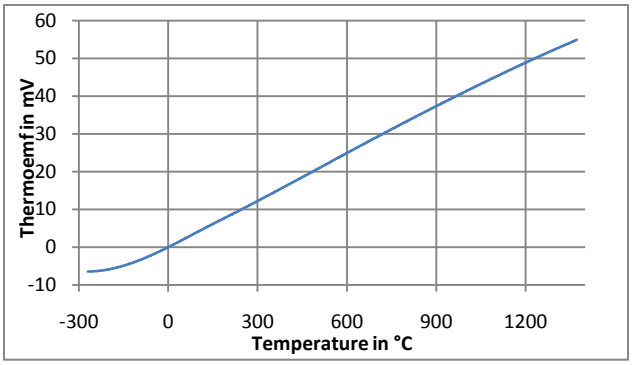

The sensitivity of a K-type thermocouple can be found from the NIST table and is approximately 40 µV/°C for temperatures > –100 °C. The NIST tables and coefficients can be found here.

2.3 Cold Junction Compensation

By measuring the thermo-emf using an ADC, the temperature can be determined. There is one catch; the cold junction must be maintained at 0 °C to use the NIST tables. It is impractical to provide an ice bath at the cold junction temperature, so another method is needed.

If the cold junction temperature is not equal to 0 °C, the cold junction will also develop a thermo-emf, V_2, as shown in Figure 4, reducing the measured voltage, V. To properly measure the hot junction temperature, the cold junction voltage, V_2, must be added to the final voltage, V.

Figure 4. Cold Junction not at 0 °C

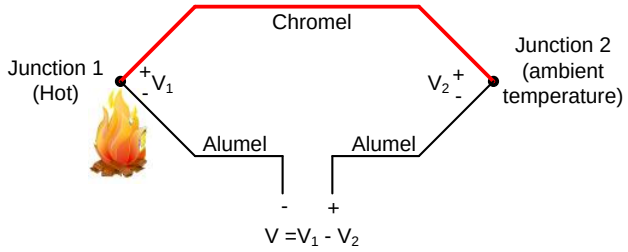

If the temperature of the cold junction is known, the voltage V_2 can be calculated from NIST tables or polynomials. Therefore, in cases where the cold junction is not at 0 °C, the cold junction temperature must be measured and the thermo-emf corresponding to that temperature must be added to the thermocouple voltage. This procedure is called cold junction compensation.

A thermistor, RTD, diode, or IC-based sensor can be used for cold junction temperature measurement. Remember that one of these cold junction temperature measurement sensors cannot substitute a thermocouple as they cannot be used for measuring very high temperatures or used in corrosive or rugged environments.

2.4 Measuring Thermo-emf

Thermo-emf can be measured with an ADC by connecting the input leads of the ADC to the thermocouple as shown in Figure 5.

Figure 5. Measuring Thermo-emf

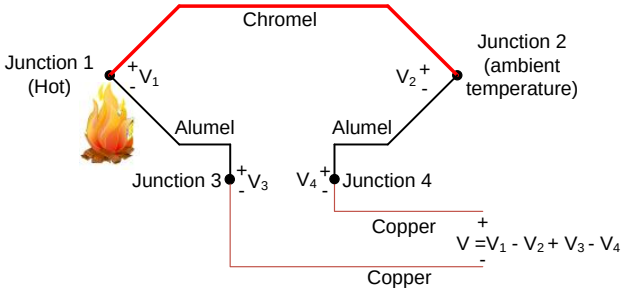

The input (copper) leads of the ADC form two more junctions (thermocouples) (copper-alumel) adding two more voltages, V_3 and V_4 to the equation. V_3 and V_4 are in opposite directions and they will have the same magnitude as long as both junctions are at the same temperature. Hence, we need to ensure that the two inputs into the ADC are at the same temperature so that the thermo-emf remains unchanged.

2.4.1 Practical Thermocouple Measurements

In practical thermocouple measurements, the two metals are joined at the hot junction and open at the cold junction (junctions 2 and 3). It can be shown that the circuits in Figure 5 and Figure 6 are equivalent. The voltage V measured by the circuits in Figure 5 and Figure 6 are equal as long as the temperatures of junctions 3 and 4 are equal in Figure 5 and temperatures of junctions 2 and 3 are equal in Figure 6.

The Isothermal Block is a key piece of thermocouple design. This block ensures that the ADC inputs are at the same temperature, and it also ensures that the cold (reference) junction sensor is also at that same temperature. Care should be taken to design an isothermal block that sufficiently keeps the temperature the same. Often times, this involves limiting air flow over the isothermal block. This application does not go into detail on isothermal block design.

Figure 6. Practical Thermocouple

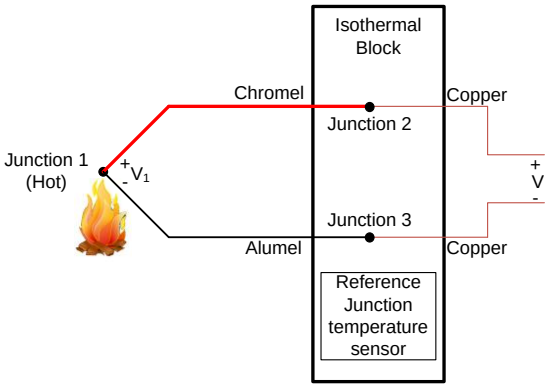

Measuring temperature using a practical thermocouple involves the following steps:

1. Measure thermocouple voltage (V_{TC})
2. Measure cold/reference junction temperature (T_{ref})
3. Convert the cold junction temperature to compensation voltage (V_{ref})
4. Add the cold junction compensation voltage to the thermocouple voltage ($V = V_{TC} + V_{ref}$)
5. Convert the voltage to temperature using NIST tables

3 Voltage-to-Temperature Conversion

The steps to compute the thermocouple temperature require the conversion of cold junction temperature to equivalent cold junction compensation voltage and converting the thermo-emf voltage to temperature.

NIST provides both polynomial coefficients and tables for voltage-to-temperature conversion and vice versa. The NIST tables and coefficients can be found here. A PSoC Creator Component is provided to simplify these conversions.

3.1 Thermocouple Component

The thermocouple component simplifies voltage-to-temperature conversion and vice versa by providing the two APIs given below.

```
int32 Thermocouple_1_GetTemperature(int32 voltage)
int32 Thermocouple_1_GetVoltage(int32 temperature)
```

The component configuration dialog, used to enter the thermocouple type and user parameters is shown in Figure 7.

Figure 7. Thermocouple Component Configuration Dialog

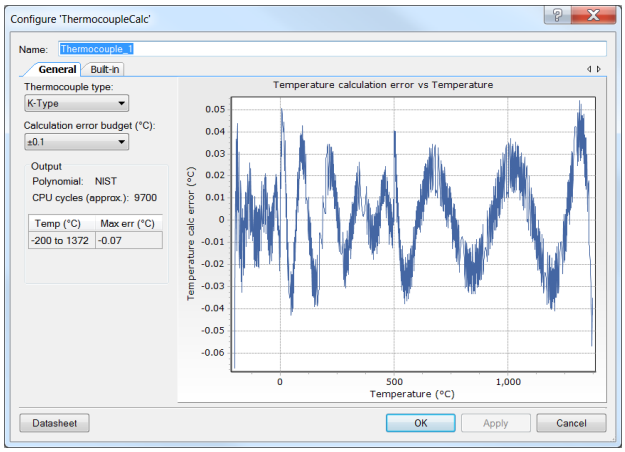

The component allows you to choose the thermocouple type and the calculation error budget. The component will automatically choose the best polynomial (among NIST standard polynomial, 7th order or 5th order polynomials) for the chosen error budget. The configuration dialog will display a graph showing temperature calculation error versus temperature. This is the error due to polynomial approximation and the associated arithmetic. The maximum calculation error in the whole temperature range is also displayed. Figure 7 shows that the maximum temperature calculation error caused by the component for K-type thermocouple is –0.07 °C.

Temperature error depends on several factors apart from voltage to temperature conversion error. The thermocouple customizer shows only the error due to voltage to temperature conversion and does not take the other errors into account. The other errors are discussed in the Temperature Accuracy section.

After measuring the cold junction temperature, use the `Thermocouple_1_GetVoltage()` function to obtain the cold junction compensation voltage. This API takes cold junction temperature as input (in 1/100th of °C) and returns cold junction compensation voltage (in microvolts).

After you have the final thermo-emf (V_{TC} + V_{ref}), use the `Thermocouple_1_GetTemperature()` function to obtain the temperature. This API takes thermo-emf (in microvolts) as input and returns temperature (in 1/100th of °C).

The following code snippet shows how the two functions are used:

```
void main()
{
    int32 coldJnTemp, tcColdJnuVolt, tcHotJnuVolt, tcuVolt, tcTemp ;
    /* Measure cold junction temperature.

    coldJnTemp = MeasureColdJnSensorTemp();

    /* ColdJunctionTempTomVolt() API is used to convert temp to microvolts */
    tcColdJnuVolt = Thermocouple _1_GetVoltage (coldJnTemp);

    /* MeasureHotJnTemp () API finds the hot junction voltage in millivolts */
    tcHotJnuVolt = MeasureHotJnVoltage();

    /* Add cold junction compensation voltage to hot junction voltage */
    tcuVolt = tcColdJnuVolt + tcHotJnuVolt;

    /* mVoltToTemp() API is used for converting thermo emf to temperature */
    tcTemp = Thermocouple_1_GetTemperature (tcuVolt);
}
```

***Note** MeasureColdJnSensorTemp() and MeasureHotJnVoltage are not Cypress-provided APIs. These are just used to show that code should be added to measure those specific variables.

The datasheet associated with the thermocouple component gives more details on the thermocouple component implementation and the number of CPU cycles taken by the APIs for different orders of the polynomial.

4 Thermocouple Measurement with PSoC

CE219905 and CE219929 provide PSoC Creator projects demonstrating how to measure a Thermocouple with PSoC 3 or PSoC 5LP devices. Please refer to the code examples documents for detailed explanations of how the code works. This section briefly describes how to configure a PSoC device to measure a Thermocouple.

Figure 8 shows the thermocouple measurement circuit (PSoC Creator schematic). The circuit has a three-channel ADC, and the thermocouple Component. The three ADC channels and their purpose are listed in Table 3.

Table 3. Five ADC Channels

Channel	Connection	Measurement
0	Thermocouple	Thermo-emf
1	IC voltage output	Cold junction temperature
2	Short	Offset

This schematic uses an IC temperature sensor for cold junction temperature measurement. That sensor can be replaced with any other desired temperature sensor.

According to the NIST tables, at –270 °C the thermocouple gives an output voltage of –6.458 mV. Because PSoC devices are single-supply, keep the voltages on the input pins above 0 V. To accomplish this, external resistors are added to the negative input of the thermocouple to add a small 15 mV bias.

Figure 8. Thermocouple Measurement Circuit

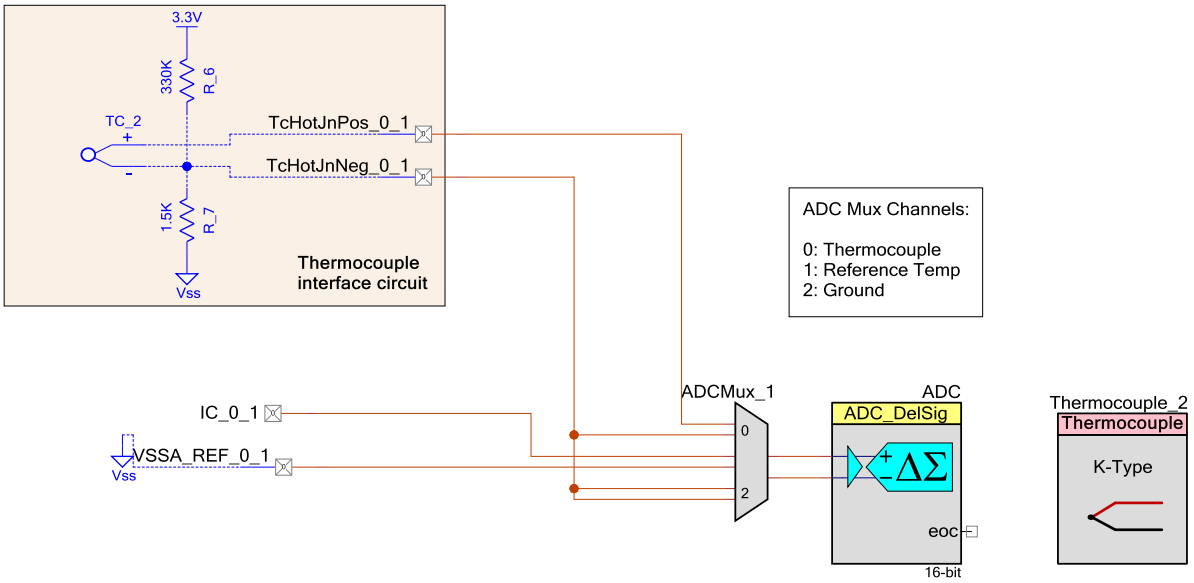

Cypress has created a special kit for temperature sensing: the PSoC Precision Analog Temperature Sensor EBK (CY8CKIT-025). This EBK provides four temperature sensors — thermocouple, thermistor, RTD, and diode. In addition, interface slots let you plug in your own thermocouple, thermistor, RTD, and diode. The EBK can be connected to the CY8CKIT-001 PSoC Development Kit (DVK), CY8CKIT-030 DVK, or the CY8CKIT-050 DVK. Figure 9 shows the kit. For more details on the kit, go here. Note this kit has all the external resistors show in Figure 8.

Figure 9. PSoC Precision Analog Temperature Sensor EBK

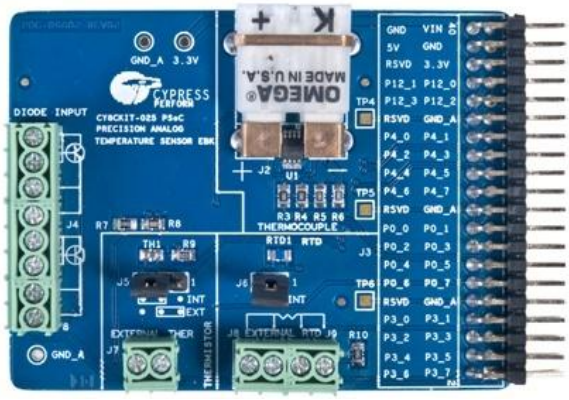

Figure 10. Thermocouple Section of the EBK



4.1.1 Offset Cancellation

The K-type thermocouple has a typical sensitivity of around 40 µV/°C. A 40-µV offset results in a 1 °C temperature error. Thus, it is very important to eliminate offset. Offset cancellation is done by correlated double sampling (CDS). In this technique, the offset is measured and subtracted after every voltage reading.

CDS also removes offset drift and reduces low-frequency noise but also reduces the ADC sample rate by 50 percent. Offset can be measured in a number of ways. See AN66444 - PSoC 3 and PSoC 5LP Correlated Double Sampling for details on different ways to measure offset. Offset, in this case, is measured using ADC channel two (see Figure 8).

4.1.2 Filtering the Thermocouple Output

The thermocouple output is filtered using a software IIR filter to reduce the noise and improve the noise-free temperature resolution. This IIR filter is based on AN2099.

4.1.3 Broken Thermocouple

If the thermocouple wire breaks, the small negative bias applied to the negative terminal of the thermocouple connector (see Figure 8) takes the ADC voltage to a large negative value. Checking the thermocouple output voltage for a large negative value (< –10 mV) detects a broken thermocouple connection.

5 Multiple Thermocouples

You can use multiple thermocouples in your design. The number of thermocouples that you can use is limited only by the number of GPIOs (input/output terminals) available in the PSoC device.

If you are using multiple thermocouples of the same type, one thermocouple component will be sufficient and the APIs generated by that component can be reused for all the thermocouples.

If you are using multiple thermocouples in your project and have more than one thermocouple type, one component per type should be used in your project. For example, if your project has three K-type thermocouples, two J-type thermocouples, and one T-type thermocouple, you need to use three thermocouple components, one for each type (J, K, and T).

6 PSoC Thermocouple Measurement Performance

Thermocouple-based temperature sensing market can be categorized into three segments based on performance specifications: High-end, mid-end, and low-end market segments. Table 4 gives the classification.

Table 4. Thermocouple Performance Ranges

Market Segment	Resolution* (°C)	Accuracy* (°C)
High	0.01	0.1%
Mid	0.1	0.2 – 0.5%
Low	>0.1 °C	>0.5 °C

* Resolution is generally specified only for temperatures > –100 °C. Accuracy doesn't include the sensor accuracy and is usually specified with a fixed offset such as, 0.1% or 1 °C, whichever is greater. Accuracy is also specified at a specific operating temperature such at 25 °C ±3 °C.

6.1 Temperature Resolution

This section explains how PSoC 3 and PSoC 5LP devices can achieve the desired resolution for each segment.

6.1.1 High End

A resolution of 0.01 °C in –200 °C to 1370 °C temperature range requires minimum 157000 levels (18-bits). The temperature range –200 °C to 1370 °C corresponds to voltage range –5.891 mV to 54.88 mV (see NIST tables). Temperature resolution of 0.01 °C corresponds to voltage resolution of 400 nV (sensitivity = 40 µV/°C).

Thus, the ADC used should have 400 nV voltage resolution, a minimum of 18 bits, and be able to measure a range of ~61 mV.

The PSoC 3 and PSoC 5LP Del-Sig ADC can be configured in a ±0.064 V range with 20-bit resolution. This provides a voltage resolution of 122 nV, over a 128 mV input range with 20 bits.

6.1.2 Mid End

A resolution of 0.1 °C in –200 °C to 1370 °C temperature range requires minimum 15700 levels (14-bits). Temperature resolution of 0.1 °C corresponds to voltage resolution of 4 uV (sensitivity = 40 µV/°C).

Thus, the ADC should have 4 uV voltage resolution, a minimum of 14-bits, and be able to measure a range of ~61 mV.

The PSoC 3 and PSoC 5LP Del-Sig ADC can be configured in a ±1.024 V range with 16-bit resolution. This provides a voltage resolution of 3.125 µV.

6.1.3 Low End

Generally low-end thermocouple temperature sensing devices have a resolution of 1 °C.

A resolution of 1 °C in the –200 °C to 1370 °C temperature range requires minimum 1570 levels (11-bits). Resolution of 1 °C corresponds to a voltage resolution of 40 µV (sensitivity = 40 µV/°C).

Thus, the ADC should have 40 µV resolution, a minimum of 11 bits, and be able to measure a range of ~61 mV.

The PSoC 3 and PSoC 5LP Del-Sig ADC can be configured in a ±0.064 V range with a 12-bit resolution. This provides a voltage resolution of 31 µV. A 16-bit ADC or higher can be used for better noise rejection, however, using a 12-bit ADC allows the usage of lower-cost PSoC devices.

6.2 Temperature Accuracy

Thermocouple temperature accuracy can be calculated by calculating the effect of the individual errors that occur during voltage measurement and temperature conversion. To understand the different errors, consider the function used by the thermocouple component to obtain the final temperature:

T_h = `Thermocouple_1_mVoltToTemp(`V_{TC}+V_{ref}`)`

where T_h is the thermocouple temperature; V_{TC} is the measured thermocouple voltage; V_{ref} is the cold junction voltage; the `Thermocouple_1_mVoltToTemp()` function performs the voltage to temperature conversion.

Next, consider the function to convert cold junction temperate to voltage.

V_{ref} = `Thermocouple_1_ColdJunctionTempTomVolt(`T_{ref}`)`

where V_{ref} is the voltage of the cold junction and T_{ref} is the cold junction temperature.

A temperature error can result from one of the factors:

1. Measured thermocouple voltage, V_{TC}.
2. Measured cold junction temperature, and conversion to voltage, V_{ref}.
3. Voltage to temperature conversion

Each of the factors is discussed in detail in the following section.

6.2.1 Thermocouple Voltage Measurement Error

Thermocouple voltage measurement error is primarily due to ADC offset error, gain error, and INL error.

6.2.1.1 Offset Error

The ADC offset error leads to incorrect thermocouple voltage measurement. Offset cancellation is done by correlated double sampling (CDS) as explained in Offset Cancellation.

6.2.1.2 Gain Error

The ADC gain error also leads to incorrect thermocouple voltage measurement. The PSoC 3 and PSoC 5LP delta sigma ADC is factory-calibrated for gain error in a subset of ADC configurations. The PSoC 3 device is calibrated for a 0.2% gain error in ±1.024 V range. This 0.2% gain error also includes the ADC reference error. AN68403– Analog Signal Chain Calibration lists the factory-calibrated ADC configurations and explains how to perform calibration on uncalibrated ADC ranges.

A 0.2% gain error results in 0.2% error in the measured voltage. The error due to 0.2% gain error at various temperatures is shown in Table 5.

If the ambient temperature (temperature of the PSoC device) is different from 25 °C, the ADC gain drift causes additional error. The PSoC 3 or PSoC 5LP delta sigma ADC has a gain drift of 50 ppm/°C. It will be 2000 ppm or 0.2% for an ambient temperature of 65 °C to –15 °C. Table 5 again shows the error due to 0.2% gain drift at 65 °C.

Table 5. Temperature Error Caused by Gain Error / Drift

Thermocouple Temperature (°C)	Error due to 0.2% Gain Error or Gain Drift (°C)
–250	–3
–100	0.2
0	0
100	0.2
250	0.5
500	0.95
1000	1.9
1300	3

6.2.1.3 ADC INL

The INL of an ADC at any point is the difference between the ideal ADC count and the actual ADC count at that point after gain and offset corrections have been done. The datasheet specifies the maximum INL of all points across Process, Voltage, and Temperature (PVT). The Del-Sig ADC has an INL of ±32 LSb in ±1.024 V mode; 32LSb corresponds to 64 µV for 20-bit resolution and ±1.024 V range. This error of 64 µV corresponds to temperature error of 1.5 °C (for temperatures > –100 °C).

Note that these are worst-case errors.

6.2.2 Cold Junction Compensation Voltage Error

Error in cold junction compensation voltage is due to the error in the measured cold junction temperature or error in temperature to voltage conversion. The `Thermocouple_1_ColdJunctionTempTomVolt`() function ensures almost zero error due to temperature to voltage conversion.

The cold junction temperature error depends on the sensor used for cold junction compensation. A 1 °C error in cold junction temperature causes approximately the same error in the measured hot junction temperature for temperatures > –100 °C (1 ± 0.2 °C).

6.2.3 Voltage to Temperature Conversion Error

Voltage to temperature conversion error is due to the polynomial approximation error or the LUT approximation error. `Thermocouple_1_mVoltToTemp` () API ensures that this error is less than 0.05 °C in most cases.

All K-type thermocouples do not follow the NIST thermo-emf versus temperature data accurately. Thermocouple tolerances provided by two major standards IEC EN 60584-2 and ASTM E230 are given in Table 2.

Table 6 gives the temperature error due to various components at 500 °C and 100 °C. As seen from the table, thermocouple tolerance is the biggest source of error. Table 6 lists all possible error sources for a K-Type thermocouple. Column 3 shows the error with a one-time gain calibration performed and reference drift calibration performed.

6.2.4 High End Calibration

To achieve 0.1% accuracy, a one-time gain calibration is required (PSoC is factory-calibrated for 0.2% accuracy only in the ±1.024 V range). CE219929 demonstrates how this is done.

PSoC gain error drifts at 50 ppm/°C (this includes ADC and Reference). While this is good for most high-end applications, there may be a few applications that require better temperature performance.

6.2.5 Error Summary

Table 6. Possible Errors in Thermocouple Temperature Measurement at 500 °C and 100 °C

Error Source	Maximum Error value at 500°C (K-Type)	Maximum Error Value at 100 °C (K-type)	Maximum Error Value at 500°C (K-Type) Calibrated
Offset Error/drift*	0 °C	0 °C	0 °C
Gain Error	0.95 °C	0.2 °C	As good as the calibration source
Gain drift (Ambient temp = 25 °C)	0 °C	0 °C	0 °C
Gain drift (Ambient temp = 65 °C)	0.95 °C	0.2 °C	As good as the external reference drift
ADC INL**	1.5 °C	1.5 °C	1.5 °C
Error due to cold junction temperature error	Same as cold junction temperature error	Same as cold junction temperature error	Same as cold junction temperature error
Error due to Thermocouple tolerance (Special)	1.1 °C	1.1 °C	1.1 °C
Voltage to temperature conversion error	0.05 °C	0.05 °C	0.05 °C

* The assumption is that CDS measurements are being done.

** The ADC INL error indicates the worst case limit. The actual temperature error will be much lower than 1.5 °C depending on the INL at that point. For a typical INL of around 4 LSb, the temperature error due to INL will be <0.2 °C.

6.3 Temperature Test

To validate the ability of PSoC 3 and PSoC 5LP to measure a thermocouple the project from CE219905 was tested by forcing different temperatures and recording the results. The temperature measured by the thermocouple is compared to the temperature measured by a standard thermometer (accuracy ±0.5 °C). A precision temperature forcing system (air flow) is used to set various temperatures.

The accuracy results are shown in Table 7. Column 1 shows the temperature set on the temperature forcing system, column 2 shows the temperature displayed by the standard thermometer, column 3 shows the thermocouple temperature, and column 4 shows the temperature error.

Table 7. Accuracy Test

Temperature Source (°C)	Standard Thermometer (°C)	Thermocouple (°C)	Temperature Error (°C)
–40	–39.5	–39.7	0.2
–20	–19.5	–19.5	0
0	–0.2	–0.7	0.5
25	24.8	25.2	–0.4
40	39.4	39.6	–0.2
60	59.1	59	0.1
80	78.9	78.7	0.2
100	98.8	98.2	0.6
120	118.8	118.2	0.6

As seen from, the temperature error is <1 °C in –40 °C to 120 °C.

6.4 Thermocouple Signal Chain Test

Temperature test includes the temperature error caused by the thermocouple tolerance. As shown in Table 6 the thermocouple tolerance is one of the biggest sources of error. The accuracy of the signal chain can by tested by feeding a millivolt source input to the thermocouple connectors and noting down the resultant thermocouple temperature measured by PSoC. The mV source voltage is also measured with a multimeter and the expected temperature is calculated from the measured voltage using NIST tables. The cold junction temperature is forced to 0 °C while performing this test. Table 8 shows the signal chain accuracy results for a sample board. Table 9 shows results for CE219929 after calibration.

Table 8. Signal Chain Accuracy Results

Simulated Thermo-emf (mV)	Expected Temperature (°C)	Measured Temperature (°C)	Error (°C)
–4.695	–141	–141.1	0.1
–3.666	–103.7	–103.7	0
–2.575	–69.6	–69.5	–0.1
–1.741	–45.9	–45.7	–0.2
–0.654	–16.8	–16.7	–0.1
0	0	0	0
0.666	16.7	16.7	0
1.754	43.5	43.4	0.1
2.58	63.5	63.5	0
3.663	89.5	89.4	0.1
4.712	114.9	114.9	0
9.582	235.9	235.8	0.1
19.58	475	4.9	0.1
28.76	691.2	691.0	0.2
39.54	955.7	955.4	0.3
49.816	1227	1226.6	0.4

Table 9. Sample Test Results after Calibrating PSoC 3 Device

Input Voltage (µV)	Expected Temperature (°C)	Actual Temperature (°C)	Error (°C)
54527	1361.43	1361.4	–0.03
45083	1099.05	1098.99	–0.06
32438	779.64	779.63	–0.01
23539	567.92	567.96	0.04
9140	224.95	224.97	0.02
2230	55.04	55.06	0.02
912	22.8	22.15	–0.65
0	0	0.12	0.12

7 Summary

Thermocouples are the sensors of choice in industrial environment and for measuring temperatures >850 °C. Thermocouples require a high-resolution ADC and require another temperature sensor for measuring cold junction temperature. PSoC 3 or PSoC 5LP delta-sigma ADC and the thermocouple component make it easy to measure thermocouple temperature accurately.

8 Related Application Notes

AN70698 – PSoC 3 and PSoC 5LP – Temperature Measurement with an RTD

AN66477 – PSoC 3 and PSoC 5LP – Temperature measurement with a Thermistor

AN60590 – PSoC 3 and PSoC 5LP – Temperature measurement with a Diode

AN2099 – PSoC 1, PSoC 3, PSoC 4, and PSoC 5LP – Single-Pole Infinite Impulse Response (IIR) Filters

9 Related Code Examples

CE219905 – PSoC 3 / PSoC 5LP - Temperature Measurement with Thermocouples

CE219929 – PSoC 3 / PSoC 5LP – Thermocouple Calibration

Document History

Document Title: AN75511 - PSoC® 3 and PSoC 5LP – Temperature Measurement with Thermocouples

Document Number: 001-75511

Revision	ECN	Orig. of Change	Submission Date	Description of Change
**	3571217	PFZ	04/03/2012	New application note
*A	3811884	PFZ	11/26/2012	Updated title to "PSoC® 3 and PSoC 5LP – Temperature Measurement with a Thermocouple". Updated Associated Part Family as "All PSoC 3 and PSoC 5LP parts". Updated Related Application Notes as "AN75511, AN66477, AN60590". Updated Introduction. Updated Thermocouple Measurement with PSoC (Updated PSoC Creator Schematic Description (Updated Table 3, updated Figure 9), updated Voltage-to-Temperature Conversion (Updated LUT versus Polynomial (Updated Table 4), updated Thermocouple Component (Updated Figure 10 and Figure 11)), updated Temperature Resolution (description), updated Voltage to Temperature Conversion Error (Updated Table 7)). Removed Appendix. Replaced PSoC 5 with PSoC 5LP in all instances across the document.
*B	3993370	TDU	05/07/2013	Updated Voltage to Temperature Conversion Error (description (Added Three Performance Projects namely High, Mid, Low)). Added Appendix A: One Time Calibration and Gain Drift Cal
*C	4153444	TDU	10/10/2013	Updated attached Associated Project.
*D	4670639	TDU	05/05/2015	Updated to latest AN template Fixed small document errors Modified flow of High End project to make drift cal optional
*E	5688134	AESATMP7	04/20/2017	Updated Cypress Logo and Copyright.
*F	5782061	TDU	07/03/2017	Moved example projects to code examples General documentation clean up

Worldwide Sales and Design Support

Cypress maintains a worldwide network of offices, solution centers, manufacturer's representatives, and distributors. To find the office closest to you, visit us at Cypress Locations.

Products

ARM® Cortex® Microcontrollers	cypress.com/arm
Automotive	cypress.com/automotive
Clocks & Buffers	cypress.com/clocks
Interface	cypress.com/interface
Internet of Things	cypress.com/iot
Memory	cypress.com/memory
Microcontrollers	cypress.com/mcu
PSoC	cypress.com/psoc
Power Management ICs	cypress.com/pmic
Touch Sensing	cypress.com/touch
USB Controllers	cypress.com/usb
Wireless Connectivity	cypress.com/wireless

PSoC® Solutions

PSoC 1 | PSoC 3 | PSoC 4 | PSoC 5LP | PSoC 6

Cypress Developer Community

Forums | WICED IOT Forums | Projects | Videos | Blogs | Training | Components

Technical Support

cypress.com/go/support

All other trademarks or registered trademarks referenced herein are the property of their respective owners.

Cypress Semiconductor
198 Champion Court
San Jose, CA 95134-1709

© Cypress Semiconductor Corporation, 2012-2017. This document is the property of Cypress Semiconductor Corporation and its subsidiaries, including Spansion LLC ("Cypress"). This document, including any software or firmware included or referenced in this document ("Software"), is owned by Cypress under the intellectual property laws and treaties of the United States and other countries worldwide. Cypress reserves all rights under such laws and treaties and does not, except as specifically stated in this paragraph, grant any license under its patents, copyrights, trademarks, or other intellectual property rights. If the Software is not accompanied by a license agreement and you do not otherwise have a written agreement with Cypress governing the use of the Software, then Cypress hereby grants you a personal, non-exclusive, nontransferable license (without the right to sublicense) (1) under its copyright rights in the Software (a) for Software provided in source code form, to modify and reproduce the Software solely for use with Cypress hardware products, only internally within your organization, and (b) to distribute the Software in binary code form externally to end users (either directly or indirectly through resellers and distributors), solely for use on Cypress hardware product units, and (2) under those claims of Cypress's patents that are infringed by the Software (as provided by Cypress, unmodified) to make, use, distribute, and import the Software solely for use with Cypress hardware products. Any other use, reproduction, modification, translation, or compilation of the Software is prohibited.

TO THE EXTENT PERMITTED BY APPLICABLE LAW, CYPRESS MAKES NO WARRANTY OF ANY KIND, EXPRESS OR IMPLIED, WITH REGARD TO THIS DOCUMENT OR ANY SOFTWARE OR ACCOMPANYING HARDWARE, INCLUDING, BUT NOT LIMITED TO, THE IMPLIED WARRANTIES OF MERCHANTABILITY AND FITNESS FOR A PARTICULAR PURPOSE. To the extent permitted by applicable law, Cypress reserves the right to make changes to this document without further notice. Cypress does not assume any liability arising out of the application or use of any product or circuit described in this document. Any information provided in this document, including any sample design information or programming code, is provided only for reference purposes. It is the responsibility of the user of this document to properly design, program, and test the functionality and safety of any application made of this information and any resulting product. Cypress products are not designed, intended, or authorized for use as critical components in systems designed or intended for the operation of weapons, weapons systems, nuclear installations, life-support devices or systems, other medical devices or systems (including resuscitation equipment and surgical implants), pollution control or hazardous substances management, or other uses where the failure of the device or system could cause personal injury, death, or property damage ("Unintended Uses"). A critical component is any component of a device or system whose failure to perform can be reasonably expected to cause the failure of the device or system, or to affect its safety or effectiveness. Cypress is not liable, in whole or in part, and you shall and hereby do release Cypress from any claim, damage, or other liability arising from or related to all Unintended Uses of Cypress products. You shall indemnify and hold Cypress harmless from and against all claims, costs, damages, and other liabilities, including claims for personal injury or death, arising from or related to any Unintended Uses of Cypress products.

Cypress, the Cypress logo, Spansion, the Spansion logo, and combinations thereof, WICED, PSoC, CapSense, EZ-USB, F-RAM, and Traveo are trademarks or registered trademarks of Cypress in the United States and other countries. For a more complete list of Cypress trademarks, visit cypress.com. Other names and brands may be claimed as property of their respective owners.