AN205148

F²MC 8/16/32-Bit Microcontroller Oscillator Circuit Configuration

This application note provides information and recommendations how to connect external crystals or resonators to Cypress microcontrollers.

1 Introduction

This application note provides some information and recommendations how to connect external crystals or resonators to Cypress microcontrollers. In order to achieve a proper and stable clock oscillation the composition of external circuits, PCB layout design and the microcontroller must be taken into account and evaluated carefully. The selection of the crystal or resonator depends also on the application requirements and environmental conditions. The information here given are general guidelines for reference in order to achieve the best solution for customers and applications requirements. Because specific restrictions of a dedicated microcontroller series might exist, it is necessary to check additionally the corresponding datasheet and hardware manual of the microcontroller series.

2 Signal Description

The dedicated clock signals are described.

2.1 Main Clock Oscillation

Generally all MCUs offer connection of a main clock oscillation. The dedicated pins for main clock connection are X0, X1. If an external clock generator is used it will be connected to X0, X1 will be NC in this case. Special restrictions regarding the oscillation frequency range might exist depending on whether a crystal oscillator or an external clock oscillator is used. Corresponding specifications are listed in the datasheet of the selected microcontroller series. To ensure proper operation always check the description about how to connect and use external clock supply in the corresponding datasheet and hardware manual of the microcontroller series.

The following figure shows the general connection for the main clock crystal connection.

Figure 1. General Main Crystal Connection

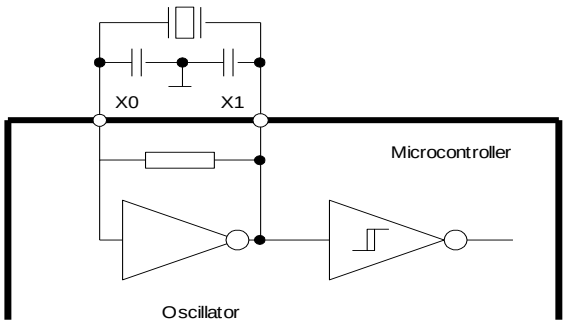

The following figure shows the general connection for an external main clock oscillator.

Figure 2. General Main Clock Oscillator Connection

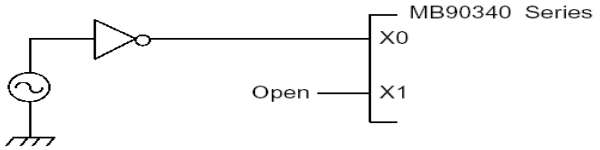

2.2 Subclock Oscillation

Some microcontrollers offer additionally the connection of a low frequency subclock. The dedicated pins for subclock connection are X0A and X1A. The frequency range for the subclock is specified in the corresponding microcontroller datasheet. Device specific restrictions and frequency ranges might exist and must be considered.

The following figure shows the general connection for the subclock connection.

Figure 3. General Subclock Crystal Connection

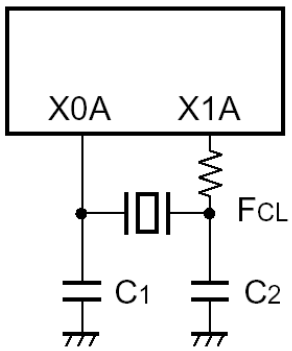

3 Selection of Crystal, Ceramic Resonator or RC Oscillation

Recommendations how to select and configure the external oscillation source.

3.1 Introduction

For Cypress microcontrollers generally crystals and ceramic resonators can be used for the main clock oscillator. So far, RC-oscillation is generally not supported by 16LX and FR series but might be supported with future series. Currently just some specific series within the F^{2}MC-8L family support RC-oscillation. Corresponding recommended RC values can be found in the adequate datasheets.

For subclock oscillation only the usage of crystals is supported. Ceramic resonators are generally not available for lower frequencies of 100KHz or less.

3.1.1 General information about crystals and resonators

The choice of oscillator type used in an application depends on the accuracy required. For high precision oscillation e.g. CAN network applications normally crystals are recommended or special high precision resonators. Additionally the environmental influences like temperature range must be taken into account. Mostly all manufacturers of crystals and resonators are offering optimised solutions for e.g. automotive or telecom applications to fulfil application specific requirements.

General differences between crystal and resonators are listed in the following table. The table is not referencing to any dedicated crystal or resonator type or manufacturer. Of course versatile types of resonators or crystals exist on the market exceeding the here listed features.

Table 1. General Features of Crystals and Resonators

	Ceramic Resonator	Crystal Resonator
Aging	+/- 3000ppm/year	+/- 10ppm/year
Frequency Tolerance	+/- 2000 – 5000ppm	+/- 10ppm - +/- 50ppm
Oscillator Rise Time	0.01 – 0.5ms	1- 10ms
Quality Factor	100 - 5000	10^3 - 10^5

3.2 Selection of Crystal or Resonator

All devices of e.g. the F^{2}MC-16LX family offer connection of a main clock oscillation which normally is in the range of 3-24MHz. But this specification depends on the selected microcontroller series. The minimum and maximum values for the specified frequency range of the external oscillation or clock supply should always carefully be checked with the datasheet of the corresponding microcontroller series.

When using crystals or resonators a capacitive load must be applied externally (some crystals/resonators types offer integrated capacitors) according to the requirements of the chosen resonator/crystal. A parallel resonator will not oscillate with a stable oscillation, if the capacitive load is insufficient. Higher capacitive load normally offers more stable oscillation. On the other side, if the capacitive load is too high, the oscillation may have problems to start the oscillation due to drive level dependency of the load. So the selection of the appropriate capacitive load is the solution for proper accurate clock oscillation. Additionally external capacitors might influence the operating clock frequency of the crystal, which must be considered as well. Depending on the selected crystal/resonator an additional external resistor might be recommended in order to tune the drive level to the needs of the oscillator type.

The capacitive load C_L of the oscillator circuit, including stray capacitances like the capacitance of the X0, X1 or X0A, X1A of the microcontroller pins, MCU socket, PCB layout, can be calculated by the equation:

$C_L = (C_{L1} * C_{L2}) / (C_{L1} + C_{L2}) + C_s$

In this equation C_{L1} and C_{L2} refer to the external capacitors shown in figure 1. C_s is the summarised stray capacitance. C_s can be estimated for most designs to 5pF – 10pF, but even higher values might exist. If $C_{L1} = C_{L2} = C_L$ the equation for C_{L1} , C_{L2} can be simplified to:

$C_{L1} = C_{L2} = 2*(C_L – C_s)$

Cypress recommends as a reasonable first choice for the main clock $C_{L1} = C_{L2} = 22$pF to 33pF. The value can vary depending on the selected crystal type. These capacitors should be connected between X0/X1 and GND as shown in figure 1.

For the subclock the load capacity C_L is expected to be about 7pF to 12pF. So the recommendation for $C_{L1} = C_{L2}$ is about 15pF. This value also varies depending on the selected crystal type. Connect the capacitors as shown in figure 3.

As the crystal and resonator oscillation stability and accuracy is a very sensitive topic, Cypress is in close contact with the main oscillation clock suppliers in order to provide reasonable values for the external components. So for versatile microcontrollers dedicated crystal/resonator measurements of the suppliers are available and can be provided to customers. For some microcontrollers some information can be found in the datasheet, which are for reference only.

The recommendations will work well in most applications, however there is no way to provide general values of the external oscillator components that can guarantee proper operation with all types of crystal and resonators. Especially application specific PCB layout configurations can influence these values very much. For this reason special tests and specifications using the original application are offered by crystal/resonator manufacturers.

Figure 4. 1 Example of Recommended Resonators Listed in the Datasheet of MB90570 Series

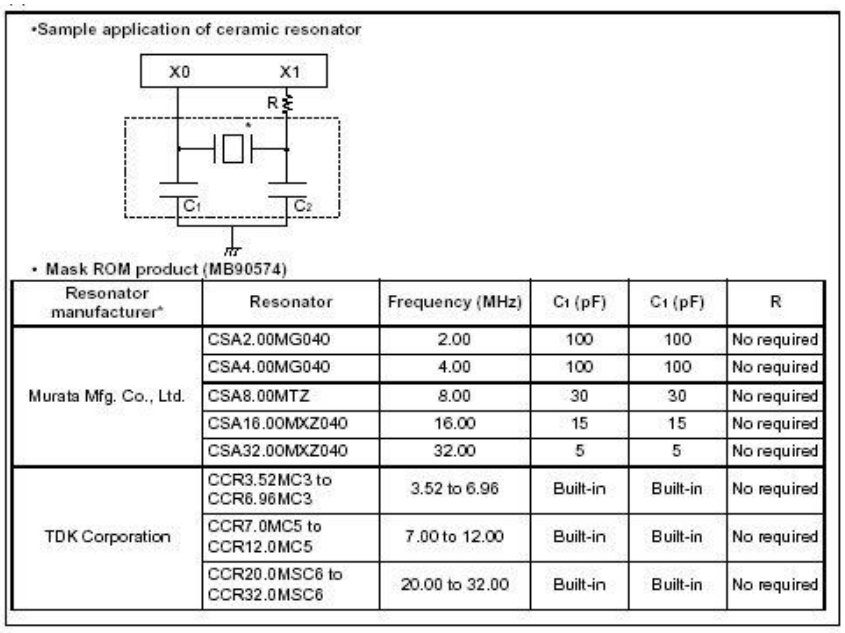

•Sample application of ceramic resonator

• Mask ROM product (MB90574)

Resonator manufacturer*	Resonator	Frequency (MHz)	C1 (pF)	C2 (pF)	R
Murata Mfg. Co., Ltd.	CSA2.00MG040	2.00	100	100	No required
	CSA4.00MG040	4.00	100	100	No required
	CSA8.00MTZ	8.00	30	30	No required
	CSA16.00MXZ040	16.00	15	15	No required
	CSA32.00MXZ040	32.00	5	5	No required
TDK Corporation	CCR3.52MC3 to CCR6.96MC3	3.52 to 6.96	Built-in	Built-in	No required
	CCR7.0MC5 to CCR12.0MC5	7.00 to 12.00	Built-in	Built-in	No required
	CCR20.0MSC6 to CCR32.0MSC6	20.00 to 32.00	Built-in	Built-in	No required

3.3 Specification of Crystal or Resonator

The description in chapter 3.2 is a first step to select a suitable crystal/resonator configuration. This configuration will work in most applications and environments but there is no way of specifying general values which always will work. Especially PCB layout and temperature requirements of the application are influencing the parameters. So dedicated tests are highly recommended and are offered by all crystal and resonators manufacturers. In order to perform these kind of tests customer offer the PCB of their application and the crystal/resonator manufacturer is performing the tests with the customers application board. This ensures proper and accurate function of the original system configuration, taking into account the environmental conditions the tests are performed for.

Cypress is in close contact with main crystal/resonator manufacturers e.g. KDS Daishinku, Kinseki Limited, Murata, NDK, Telequarz, etc. Adequate reference measurements and reports are available for most microcontrollers or will be done on special request. In case of need please contact Cypress or your preferred crystal/resonator manufacturer to get the required reports.

The following figures show the crystal test and specification report of Kinseki Limited for MB90F387S as an example.

Specification

IC number:	MB90F387S 0252 M12
Crystal unit type:	HC-49/U-S
Frequency:	4000kHz, 8000kHz, 16000kHz
Frequency room-temperature tolerance:	$\pm 50 \times 10^{-6}$ (25±5℃)
Frequency temperature characteristics (referred to 25℃):	$\pm 200 \times 10^{-6}$(−40～+105:25℃)
Resonance resistance standard:	200Ω MAX. 90Ω MAX. 50Ω MAX.
Load capacitance:	8pF

Circuit examination history

Aug.7.2003 K1502-03C76-211 1/2～2/2 : First Edition

○ 4000kHz, 8000kHz, 16000kHz measuring circuit diagram (Universal board)

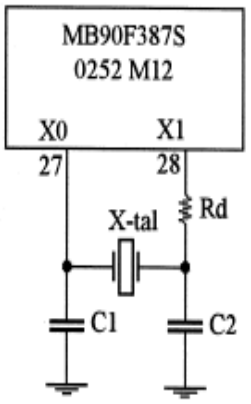

Vdd = 5V
X-tal: HC-49/U-S
4000 kHz (Load capacitance=8pF)
8000 kHz (Load capacitance=8pF)
16000 kHz (Load capacitance=8pF)

Measuring frequency: 4,8,16 MHz

- Measuring equipment
  Negative resistance: frequency: Spectrum analyzer (Anritsu MS2661C)
  Start-up time: Oscilloscope (HP Infinium 500MHz)
  Probe (HP1152A)
  Drive current: Oscilloscope (HP Infinium 500MHz)
  Probe (TEKTRONIX P6022A)
- Common measuring items (characteristics when at recommending constants)
  Measuring items: Negative resistance, load capacitance, frequency tolerance, drive level, $3F_0$ negative resistance, start-up time.

○ Circuit constants and characteristics

Frequency (MHz)	Circuit constants	Negative resistance (Ω)	Load capacitance (pF) *1	Frequency tolerance ($\times 10^{-6}$) *2	Drive level (μW) *3	$3F_0$ negative resistance (Ω)	Start-up time (ms)
4000	Rd=0 Ω C1=9pF C2=9pF	-5455	8.09	-1.8	42.8	-653 (at 12MHz)	2.1
8000	Rd=0 Ω C1=10pF C2=9pF	-1224	8.00	+0.1	59.1	-145 (at 24MHz)	1.2
16000	Rd=0 Ω C1=10pF C2=9pF	-349	7.80	+7.9	162.0	-0 (at 48MHz)	1.1

*1 Load capacitance of oscillator circuits.
*2 Frequency tolerance when it is presumed that a crystal unit produced to have frequency tolerance = ±0 at load capacitance = 8pF is used.
*3 When a crystal unit series resonance resistance (4000kHz:38.53 Ω, 8000kHz:14.97 Ω, 16000kHz:10.6 Ω) is used.

○ About frequency range

Since negative resistance is small in order to use by the 16MHz frequency band, it cannot recommend. However, since negative resistance will become large if C1 and C2 are changed into small value when it is permitted that a frequency deviation becomes large to high value, it may be able to use.

3.4 ROM devices versus Flash devices

Note, that the technology of Mask-ROM and Flash Devices is different. Therefore the crystal tests have to be done for each technology. As a result, the crystal type can differ for a ROM derivatives of a Flash device and vice versa!

4 PCB-Layout Recommendations

Recommendations for PCB layout to connect crystal/resonator oscillator.

4.1 Introduction

Based on the example for the 16LX family PCB layout rules and recommendations are shown hereafter. In principle the same recommendations are valid for FFMC-8L and FR series. For further layout design rules please also check the application note *EMC Design Guide F²MC-16LX Family*.

4.2 General rules for PCB layout design

1. Use max. trace-width and min. length to connect VSS and VDD µC-pins to decoupling capacitors (DeCap)
2. Don't use stub line to connect the DeCap to µC-pins, let flows the noise current direct through pads of DeCap
3. Use close ground plane direct below MCU package as shield
4. Use different ground systems for analogue, digital, power-driver and connector ground
5. Avoid loop current in the ground system, check for ground loops.
6. Use a star point ground below MCU for analogue and digital ground, use a second star point ground below 5V regulator for MCU, power-driver and connector ground
7. Don't create signal loop on the PCB, minimize trace length
8. Partitione system into analogue, digital and power-driver section
9. Place series resistor or RC-block for the IO-circuit nearby MCU-pin to reduce the noise on the signal line.
10. Use a capacitor for each connector pin to reduce the noise of external lines, place this capacitor close to connector pin

Figure 5 shows the oscillator for the Cypress 16-bit family. For best performance, the PCB layout of this circuit should cover only a very small area. For the layout is recommended a PCB with two or more layers. Make sure to provide bypass capacitors via shortest distance from X0, X1 pins, crystal oscillator, and ground lines. The lines of the oscillation circuit should not cross lines of other circuits.

Figure 5. Principle of Main Crystal Clock Oscillator

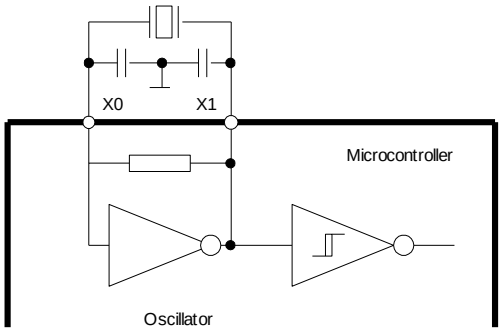

4.3 PCB Layout and Design

It is necessary to avoid coupling noise into the power supply of the clock circuit.

The crystal oscillator has to be connected with short lines to X0/X1(X0A/X1A) and Vss. Note that pin X1 (X1A) is the output of inverter. Particularly this track should have a short length.

Figure 6. Layout Example for Oscillator Circuit

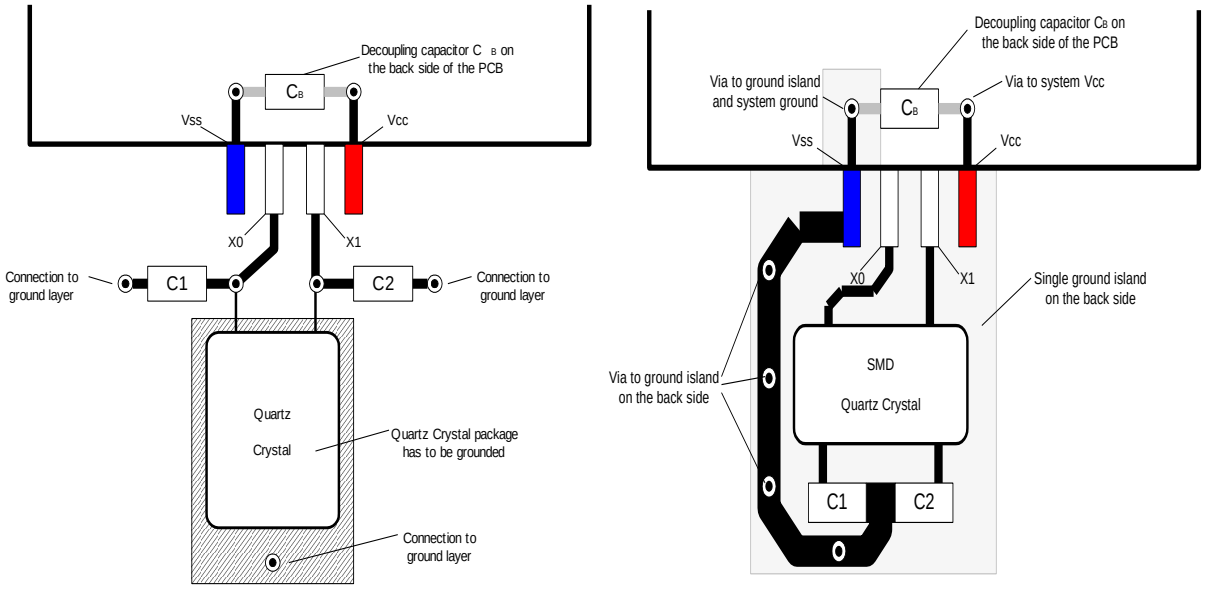

a) Layout example for a leaded quartz crystal
Worse layout design, because C1 and C2 are wrongly connected to VSS

b) Layout example for a SMD quartz crystal
Better layout design, because C1 and are connected to Vss and then after with the system ground

Please also have a look at the Application *Note AN-900098-HW_SETUP* for further layout recommendations

5 Summary and Conclusion

Final conclusion about selection of suitable resonators/crystals.

5.1 Summary

This application note is giving guidelines and recommendations for the circuit composition and configuration of the oscillation clock source for Cypress microcontrollers. In general it is impossible to offer general values and specifications for the oscillation which will work under all environmental and application requirements. Additionally the PCB layout and PCB material is influencing this specification. For this reasons just reference values can be offered which work in most cases but do not consider worst case scenarios of e.g. temperature, additional capacitive load on the PCB.

5.2 Conclusion

For the specification of a crystal or resonator clock source including the specification of the needed external components it is mandatory, especially for high precision systems and systems requiring highest reliability, to perform application specific measurements. These measurements are done in cooperation with crystal/resonator manufactures offering this kind of service. For this purpose Cypress is in close contact will the main manufacturers of crystal/resonators.

This application note is giving design rules and recommendations for the composition of the oscillation clock source which will work in most applications but they do not release the system designer from a verification in the original system. The final qualification has to be done by the customer with his special PCB.

6 Document History

Document Title: AN205148 - F²MC 8/16/32-Bit Microcontroller Oscillator Circuit Configuration

Document Number: 002-05148

Revision	ECN	Orig. of Change	Submission Date	Description of Change
**	-	MKEA	10/14/2003	ReV 1.0 Initial Release
			12/22/2003	Rev 1.1 Chapter 3.2 updated
			04/22/2004	Rev 1.2 Upgraded
			09/02/2005	Rev 1.3 Chapter 3.2 updated
*A	5036071	MKEA	01/05/2016	Migrated Spansion Application Note from MCU-AN-300007-E-V13 to Cypress format
*B	5832488	AESATMP9	07/25/2017	Updated logo and copyright.

Worldwide Sales and Design Support

Cypress maintains a worldwide network of offices, solution centers, manufacturer's representatives, and distributors. To find the office closest to you, visit us at Cypress Locations.

Products

ARM® Cortex® Microcontrollers	cypress.com/arm
Automotive	cypress.com/automotive
Clocks & Buffers	cypress.com/clocks
Interface	cypress.com/interface
Internet of Things	cypress.com/iot
Memory	cypress.com/memory
Microcontrollers	cypress.com/mcu
PSoC	cypress.com/psoc
Power Management ICs	cypress.com/pmic
Touch Sensing	cypress.com/touch
USB Controllers	cypress.com/usb
Wireless Connectivity	cypress.com/wireless

PSoC® Solutions

PSoC 1 | PSoC 3 | PSoC 4 | PSoC 5LP | PSoC 6

Cypress Developer Community

Forums | WICED IOT Forums | Projects | Videos | Blogs | Training | Components

Technical Support

cypress.com/support

All other trademarks or registered trademarks referenced herein are the property of their respective owners.

Cypress Semiconductor
198 Champion Court
San Jose, CA 95134-1709

© Cypress Semiconductor Corporation, 2003-2017. This document is the property of Cypress Semiconductor Corporation and its subsidiaries, including Spansion LLC ("Cypress"). This document, including any software or firmware included or referenced in this document ("Software"), is owned by Cypress under the intellectual property laws and treaties of the United States and other countries worldwide. Cypress reserves all rights under such laws and treaties and does not, except as specifically stated in this paragraph, grant any license under its patents, copyrights, trademarks, or other intellectual property rights. If the Software is not accompanied by a license agreement and you do not otherwise have a written agreement with Cypress governing the use of the Software, then Cypress hereby grants you a personal, non-exclusive, nontransferable license (without the right to sublicense) (1) under its copyright rights in the Software (a) for Software provided in source code form, to modify and reproduce the Software solely for use with Cypress hardware products, only internally within your organization, and (b) to distribute the Software in binary code form externally to end users (either directly or indirectly through resellers and distributors), solely for use on Cypress hardware product units, and (2) under those claims of Cypress's patents that are infringed by the Software (as provided by Cypress, unmodified) to make, use, distribute, and import the Software solely for use with Cypress hardware products. Any other use, reproduction, modification, translation, or compilation of the Software is prohibited.

TO THE EXTENT PERMITTED BY APPLICABLE LAW, CYPRESS MAKES NO WARRANTY OF ANY KIND, EXPRESS OR IMPLIED, WITH REGARD TO THIS DOCUMENT OR ANY SOFTWARE OR ACCOMPANYING HARDWARE, INCLUDING, BUT NOT LIMITED TO, THE IMPLIED WARRANTIES OF MERCHANTABILITY AND FITNESS FOR A PARTICULAR PURPOSE. To the extent permitted by applicable law, Cypress reserves the right to make changes to this document without further notice. Cypress does not assume any liability arising out of the application or use of any product or circuit described in this document. Any information provided in this document, including any sample design information or programming code, is provided only for reference purposes. It is the responsibility of the user of this document to properly design, program, and test the functionality and safety of any application made of this information and any resulting product. Cypress products are not designed, intended, or authorized for use as critical components in systems designed or intended for the operation of weapons, weapons systems, nuclear installations, life-support devices or systems, other medical devices or systems (including resuscitation equipment and surgical implants), pollution control or hazardous substances management, or other uses where the failure of the device or system could cause personal injury, death, or property damage ("Unintended Uses"). A critical component is any component of a device or system whose failure to perform can be reasonably expected to cause the failure of the device or system, or to affect its safety or effectiveness. Cypress is not liable, in whole or in part, and you shall and hereby do release Cypress from any claim, damage, or other liability arising from or related to all Unintended Uses of Cypress products. You shall indemnify and hold Cypress harmless from and against all claims, costs, damages, and other liabilities, including claims for personal injury or death, arising from or related to any Unintended Uses of Cypress products.

Cypress, the Cypress logo, Spansion, the Spansion logo, and combinations thereof, WICED, PSoC, CapSense, EZ-USB, F-RAM, and Traveo are trademarks or registered trademarks of Cypress in the United States and other countries. For a more complete list of Cypress trademarks, visit cypress.com. Other names and brands may be claimed as property of their respective owners.