Please note that Cypress is an Infineon Technologies Company.
The document following this cover page is marked as “Cypress” document as this is the company that originally developed the product. Please note that Infineon will continue to offer the product to new and existing customers as part of the Infineon product portfolio.

Continuity of document content
The fact that Infineon offers the following product as part of the Infineon product portfolio does not lead to any changes to this document. Future revisions will occur when appropriate, and any changes will be set out on the document history page.

Continuity of ordering part numbers
Infineon continues to support existing part numbers. Please continue to use the ordering part numbers listed in the datasheet for ordering.



THIS SPEC IS OBSOLETE

Spec No: 002-04940

Spec Title: AN204940 - F2MC - 8L FAMILY, MB89F538, PROGRAMMING GUIDE

Replaced By: NONE

AN204940

F²MC - 8L Family, MB89F538, Programming Guide

This application note describes how to program the Cypress MB89F538 MCU in serial asynchronous mode.

OBSOLETE

Contents

1 Introduction....1
2 Software Setup....1
2.1 Installation....1
3 Flash Programmer....2
3.1 Programming the MB89F538....2
3.2 Customize Crystal Frequencies....3
4 Hardware Settings....4
4.1 Pin Settings....4
5 Pin Assignment....5
5.1 Related Pins for Programming....5
6 Example Schematic....8
6.1 Setup for Programming....8
Document History....9

1 Introduction

This application note describes how to program the Cypress MB89F538 MCU in serial asynchronous mode.

2 Software Setup

Cypress Flash MCU Programmer

2.1 Installation

To install the Cypress Flash 8-Bit-MCU Programming Software, you have to execute the program “PCW8Fsetup.exe”. Then follow the steps of the setup dialog.

After successful installation, you will find the Cypress Flash MCU programmer in the folder:

“C:\Program Files\ Cypress \CYPRESS FLASH MCU Programmer\FMC8L(FLASH)\flash.exe”

The symbol of this tools looks like the following picture



3 Flash Programmer

Using the Flash Programmer

3.1 Programming the MB89F538

When the Cypress Flash 8-Bit MCU Programmer, “flash.exe”, is executed the following window will occur:

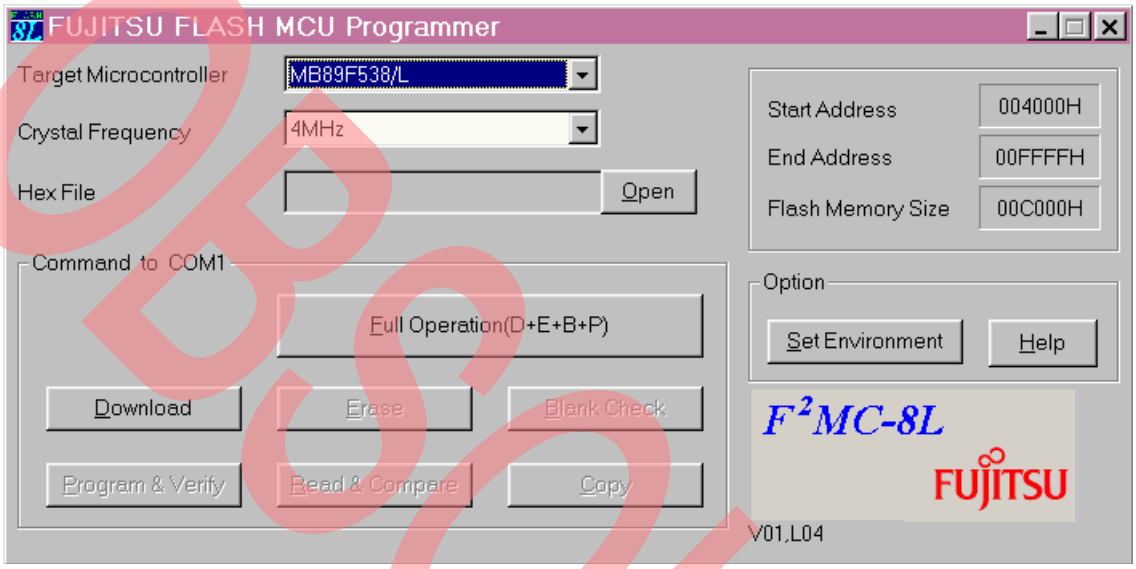

The target microcontroller is MB89F538/L, and the crystal frequency has to be set to the used crystal frequency on the target board. 2MHz, 4MHz and 8MHz are available. For other frequencies see the next chapter.

To program the flash with your code, first set the MCU into Serial Programming Mode (see Chapter 3 for hardware settings). Then choose *Open* for selecting the code to be programmed into the Flash Memory. This code has to be a mhx-, cnv-, or ahx-object file, which was generated by a compiler tool (e. g. Softune Workbench).

After selecting the hex-file press the *Full Operation (D+E+B+P)* button. This means that the programming steps “download”, “erase”, “blank check”, and “program & verify” will be executed sequentially.

Alternatively you can use *Download* first. Then the commands *Erase*, *Blank Check*, *Program & Verify*, and *Read & Compare* have to be used separately.

Note: If *Download* is used, *Full Operation* can not be used afterwards.

OBSOLETE

3.2 Customize Crystal Frequencies

It is possible to use different crystal frequencies than the default frequencies.

For this the file “Chipdef.ini” in the “FMC8L(FLASH)” directory can be customized with a standard text editor.

Assume you want to use a 5MHz crystal. Open the file “Chipdef.ini” and change the following entries:

Old:	`Clock=2MHz,4MHz,8MHz`	New:	`Clock=2MHz,4MHz,5MHz,8MHz,10MHz`
	`Baud=1200,2400,4800`		`Baud=1200,2400,3000,4800,5900`
	`Baud2=2400,4800,9600`		`Baud2=2400,4800,6000,9600,11520`

After you have done the changes, save the file and then start the Cypress Flash 8-Bit MCU Programmer.

Now the added crystal frequency occurs in the *Crystal Frequency* text field.

Note, Baud is the baud rate for downloading the transfer program and Baud2 the rate this program uses.

Calculation formulas for the baud rates:

$\mathbf{Baud_{MCU}} = \Phi \cdot 0.0006\ \text{Bit/Hz·s}$

$\mathbf{Baud2_{MCU}} = \Phi \cdot 0.0012\ \text{Bit/Hz·s}$

Φ = crystal frequency in Hz

$\mathbf{Baud_{PC}} = 230400\ \text{Hz} / (\lfloor 230400\ \text{Hz} / (2 \cdot Baud_{MCU}) \rfloor \cdot 2)$

$\mathbf{Baud2_{PC}} = 230400\ \text{Hz} / (\lfloor 230400\ \text{Hz} / (2 \cdot Baud2_{MCU}) \rfloor \cdot 2)$

⌊ ⌋ = floor function*

The baud rate setting for Φ is only valid, if

$0.955 \le (Baud_{MCU}/Baud_{PC}) \le 1.045$

and $0.955 \le (Baud2_{MCU}/Baud2_{PC}) \le 1.045$.

This means, that the PC-UART baud rates deviation to MCU baud rates must not less than −4.5% and bigger than 4.5%.

If the both baud rates are valid, the PC-UART baud rates have to be entered in the file “Chipdef.ini”.

Note: Please refer to the Clock Timing chapter in the Data sheet for the minimum and maximum crystal frequencies.

***greatest integer function**

OBSOLETE

4 Hardware Settings

How to program the FLASH MCU

4.1 Pin Settings

4.1.1 Serial Asynchronous Programming

To program the flash memory some pins of the MCU has to be set to several voltage levels (V_{SS} and V_{CC}).

To enter the flash programming mode use the following pins settings and reset the MCU (low means V_{SS} and high means V_{CC}):

Flash Programming Mode				
Pin Name	**Pin No. (DIP-M01)**	**Pin No. (FPT-M06)**	**Pin No. (FPT-M09)**	**Logic Level**
MOD0	28	21	20	High
MOD1	29	22	21	High
MOD2	10	3	2	Low
P10	48	41	40	Low
P22	38	31	30	High
P23	37	30	29	Low

To download the software use the SI1(UI1)-Pin for serial input and the SO1(UO1)-Pin for serial output.

Caution: To connect the MCU to the serial PC interface (RS232) you have to use a voltage level shifter (e.g. MAX232).

The Flash Programming Tool described in chapter 2.1 can be used for programming.

Attention: Do not abort the sequence “Erase Flash” by switching off the power of the MCU, by resetting the MCU or by aborting the programming tool! The Flash Memory can be damaged permanently in this case!

4.1.2 Run Mode

After programming the Flash Memory the MCU executes the program in its run mode by setting the pins MOD0, MOD1, MOD2 to “Low” level and resetting it (or after power on). The Pins P10, P22, and P23 are working then as resource input/output or general purpose pin.

OBSOLETE

5 Pin Assignment

Pins for Flash Programming of different packages

5.1 Related Pins for Programming

In the following illustrations show the related pins for programming the Flash Memory. These pins are marked red (grey).

5.1.1 MB89F538/L DIP-64P-M01

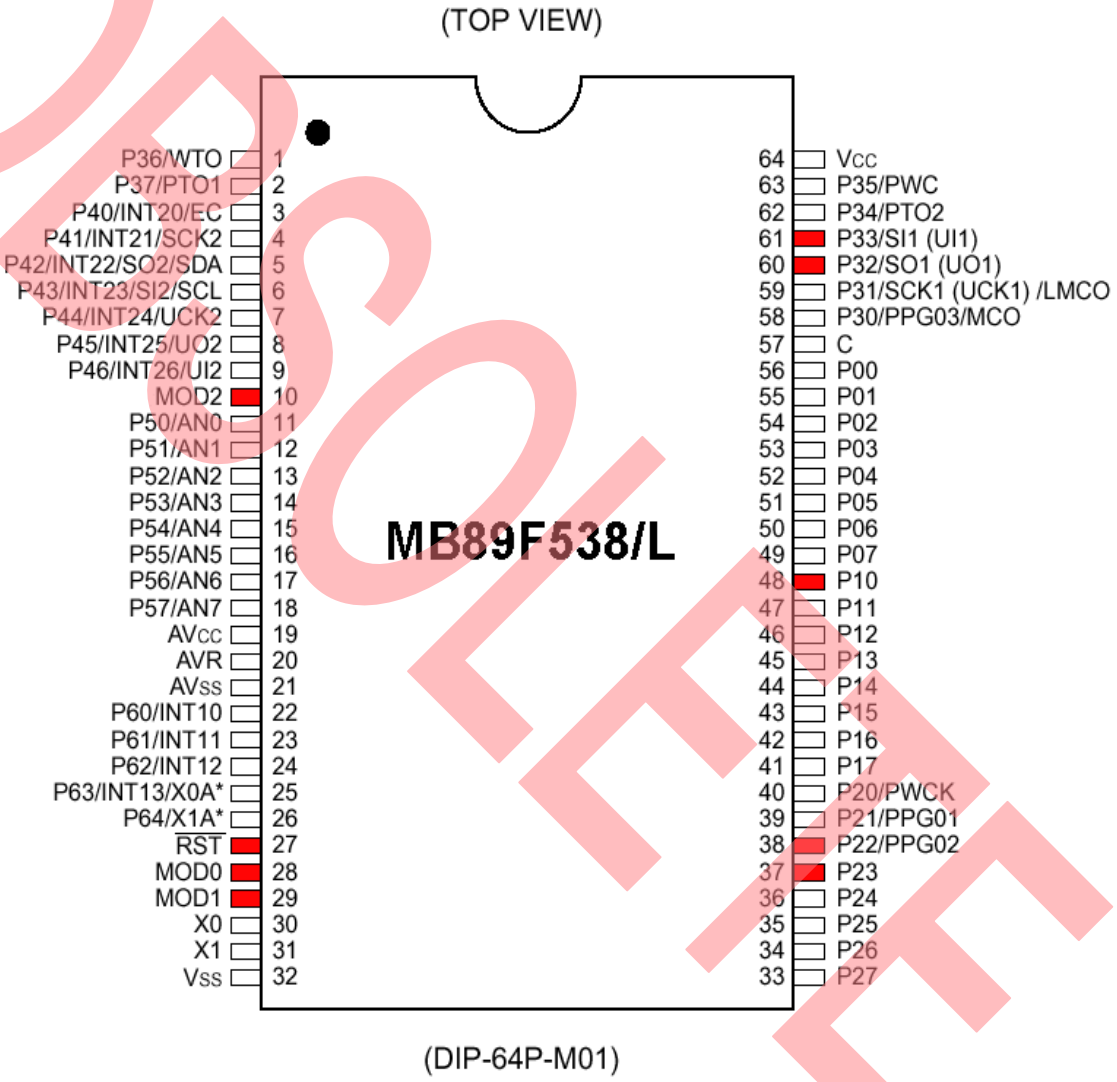

OBSOLETE

5.1.2 MB89F538/L FPT-64P-M06

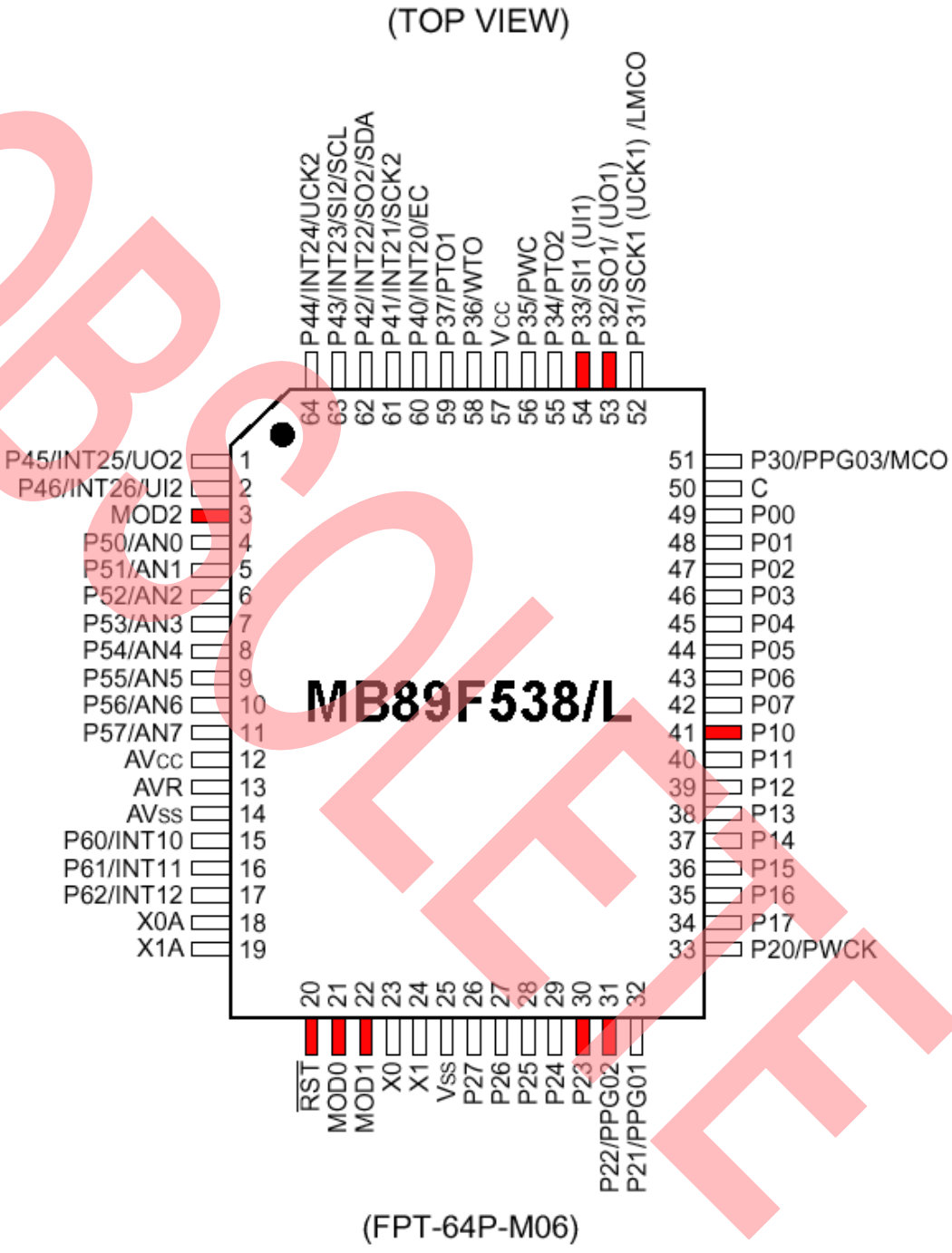

OBSOLETE

5.1.3 MB89F538/L FPT-64P-M09

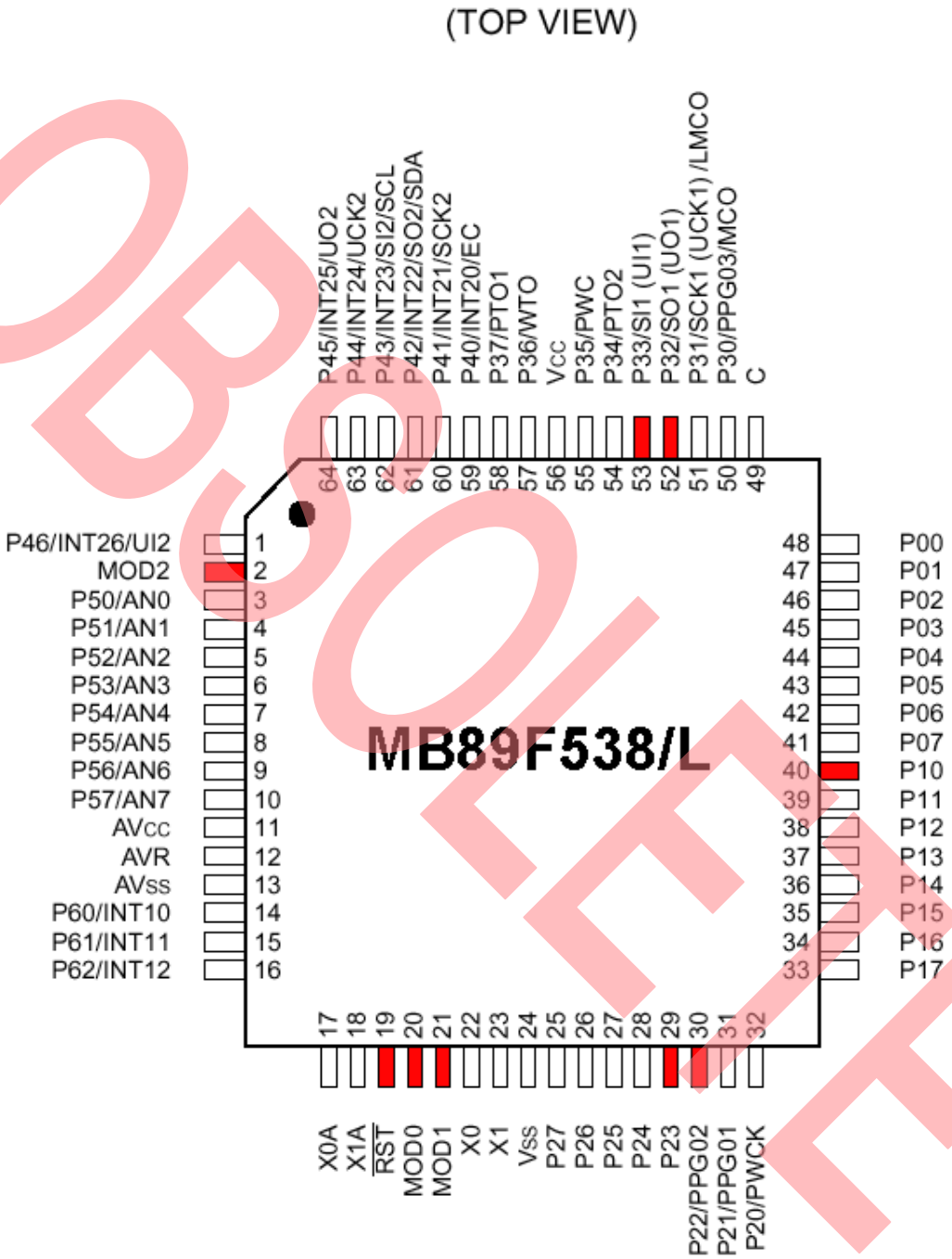

OBSOLETE

6 Example Schematic

Hardware setup

6.1 Setup for Programming

The following schematic gives an example for the hardware setup for programming the Flash Memory in serial asynchronous mode:

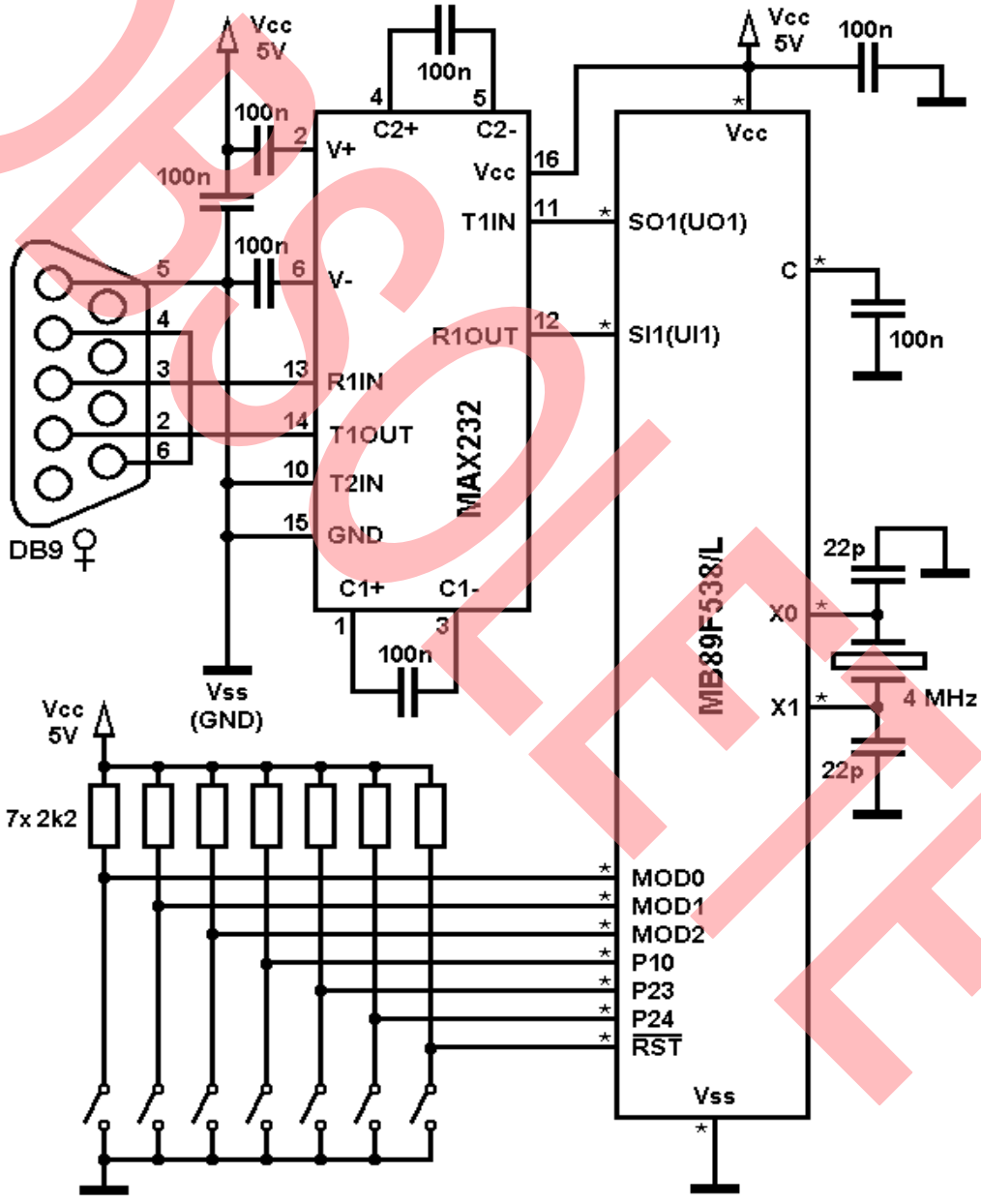

OBSOLETE

Document History

Document Title: AN204940 – F²MC - 8L Family, MB89F538, Programming Guide

Document Number: 002-04940

Revision	ECN	Orig. of Change	Submission Date	Description of Change
**	-	WOFR	11/06/2002	First release
			01/08/2003	Revision 2.0
			03/04/2003	Revision 2.1; calculation errors removed
			04/10/2003	Revision 2.2; typo on p. 7 removed
*A	5278932	WOFR	05/20/2016	Migrated Spansion Application Note “MCU-AN-389019-E-V22” to Cypress format.
*B	5612265	WOFR	01/31/2017	Spec obsoleted. No further updates planned.

OBSOLETE

Worldwide Sales and Design Support

Cypress maintains a worldwide network of offices, solution centers, manufacturer's representatives, and distributors. To find the office closest to you, visit us at Cypress Locations.

Products

ARM® Cortex® Microcontrollers	cypress.com/arm
Automotive	cypress.com/automotive
Clocks & Buffers	cypress.com/clocks
Interface	cypress.com/interface
Lighting & Power Control	cypress.com/powerpsoc
Memory	cypress.com/memory
PSoC	cypress.com/psoc
Touch Sensing	cypress.com/touch
USB Controllers	cypress.com/usb
Wireless/RF	cypress.com/wireless

PSoC® Solutions

PSoC 1 | PSoC 3 | PSoC 4 | PSoC 5LP

Cypress Developer Community

Forums | Projects | Videos | Blogs | Training | Components

Technical Support

cypress.com/support

OBSOLETE

PSoC is a registered trademark and PSoC Creator is a trademark of Cypress Semiconductor Corporation. All other trademarks or registered trademarks referenced herein are the property of their respective owners.

Cypress Semiconductor
198 Champion Court
San Jose, CA 95134-1709

Phone : 408-943-2600
Fax : 408-943-4730
Website : www.cypress.com

© Cypress Semiconductor Corporation,2002-2017. This document is the property of Cypress Semiconductor Corporation and its subsidiaries, including Spansion LLC ("Cypress"). This document, including any software or firmware included or referenced in this document ("Software"), is owned by Cypress under the intellectual property laws and treaties of the United States and other countries worldwide. Cypress reserves all rights under such laws and treaties and does not, except as specifically stated in this paragraph, grant any license under its patents, copyrights, trademarks, or other intellectual property rights. If the Software is not accompanied by a license agreement and you do not otherwise have a written agreement with Cypress governing the use of the Software, then Cypress hereby grants you a personal, non-exclusive, nontransferable license (without the right to sublicense) (1) under its copyright rights in the Software (a) for Software provided in source code form, to modify and reproduce the Software solely for use with Cypress hardware products, only internally within your organization, and (b) to distribute the Software in binary code form externally to end users (either directly or indirectly through resellers and distributors), solely for use on Cypress hardware product units, and (2) under those claims of Cypress's patents that are infringed by the Software (as provided by Cypress, unmodified) to make, use, distribute, and import the Software solely for use with Cypress hardware products. Any other use, reproduction, modification, translation, or compilation of the Software is prohibited.

TO THE EXTENT PERMITTED BY APPLICABLE LAW, CYPRESS MAKES NO WARRANTY OF ANY KIND, EXPRESS OR IMPLIED, WITH REGARD TO THIS DOCUMENT OR ANY SOFTWARE OR ACCOMPANYING HARDWARE, INCLUDING, BUT NOT LIMITED TO, THE IMPLIED WARRANTIES OF MERCHANTABILITY AND FITNESS FOR A PARTICULAR PURPOSE. To the extent permitted by applicable law, Cypress reserves the right to make changes to this document without further notice. Cypress does not assume any liability arising out of the application or use of any product or circuit described in this document. Any information provided in this document, including any sample design information or programming code, is provided only for reference purposes. It is the responsibility of the user of this document to properly design, program, and test the functionality and safety of any application made of this information and any resulting product. Cypress products are not designed, intended, or authorized for use as critical components in systems designed or intended for the operation of weapons, weapons systems, nuclear installations, life-support devices or systems, other medical devices or systems (including resuscitation equipment and surgical implants), pollution control or hazardous substances management, or other uses where the failure of the device or system could cause personal injury, death, or property damage ("Unintended Uses"). A critical component is any component of a device or system whose failure to perform can be reasonably expected to cause the failure of the device or system, or to affect its safety or effectiveness. Cypress is not liable, in whole or in part, and you shall and hereby do release Cypress from any claim, damage, or other liability arising from or related to all Unintended Uses of Cypress products. You shall indemnify and hold Cypress harmless from and against all claims, costs, damages, and other liabilities, including claims for personal injury or death, arising from or related to any Unintended Uses of Cypress products.

Cypress, the Cypress logo, Spansion, the Spansion logo, and combinations thereof, PSoC, CapSense, EZ-USB, F-RAM, and Traveo are trademarks or registered trademarks of Cypress in the United States and other countries. For a more complete list of Cypress trademarks, visit cypress.com. Other names and brands may be claimed as property of their respective owners.