Shifter
1.0

Features

- For use with the "Basic Hierarchical Design" tutorial in the Help file

Note This is **only an example** intended to show you how to use components you created in a hierarchical design. For more detailed instructions about creating components, refer to the *Component Author Guide*.

General Description

This project contains an example project for use with the tutorial: "Basic Hierarchical Design." The tutorial is located in the PSoC Creator Help, under Getting Started > Design Tutorials > Advanced.

This project and tutorial demonstrate how to re-use components created in the "Library Component Project" tutorial to create a simple hierarchical design. The project demonstrates the working of an 8-bit shifter using two 4-bit shifters.

Project Dependency Requirement

When you open this project's schematic file, you will notice that there are empty boxes with "X"s, and the Notice List window reports numerous errors. This is because the project requires the *My1stLib.cyprj* library project as a dependency. To add this dependency:

1. Open PSoC Creator **File** menu and select **Open – Example project:**

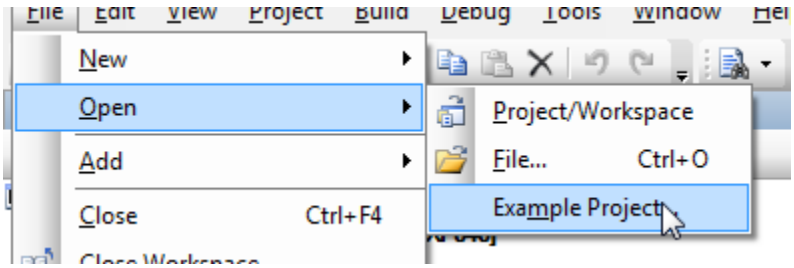

2. Find project named **My1stLib**, and select option **“Add Example project to Current Workspace”**:

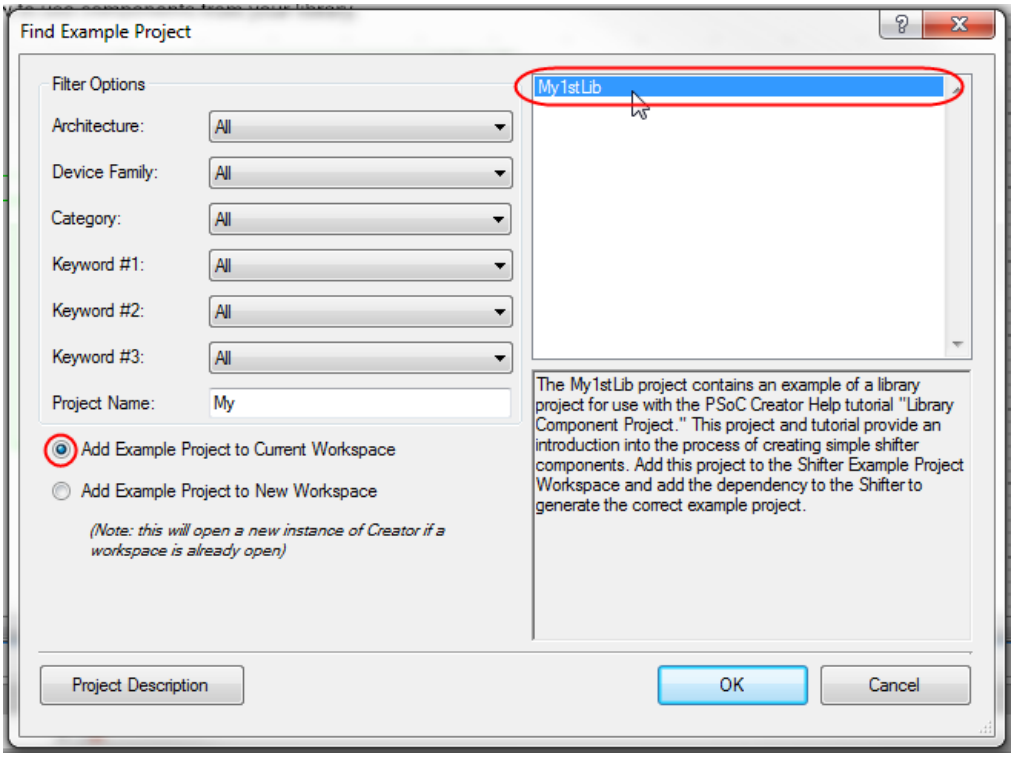

3. Then click **OK** to load example library to your workspace.
4. Right-click on the "Shifer#" project in the Workspace Explorer and select **Dependencies**.
5. Set checkbox near ‘My1stLib#:

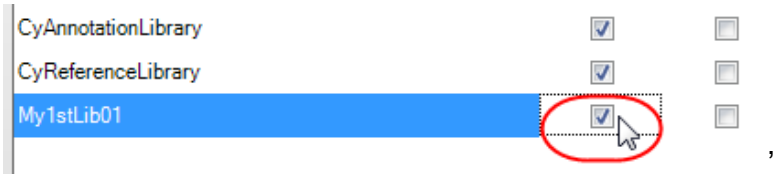

6. Then click **OK** to close the Dependency dialog.

The schematic should show now the adder components, and the errors in the Notice List window should be gone.

Project Configuration

This design consists of two 4-bit shifter components, as shown in the following schematic. It is intended to show how to use library components in a design to potentially create additional

components. Refer to the "Basic Hierarchical Design" tutorial in the PSoC Creator Help for more information.

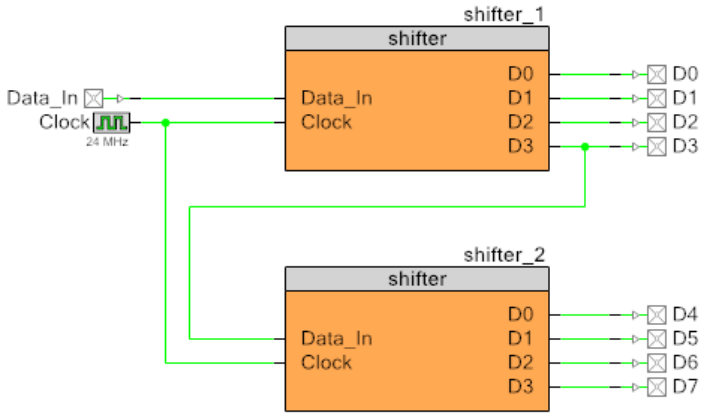

After adding the library dependency, the project will build without any errors.

Cypress Semiconductor
198 Champion Court
San Jose, CA 95134-1709

Phone : 408-943-2600
Fax : 408-943-4730
Website : www.cypress.com

© Cypress Semiconductor Corporation, 2009-2013. The information contained herein is subject to change without notice. Cypress Semiconductor Corporation assumes no responsibility for the use of any circuitry other than circuitry embodied in a Cypress product. Nor does it convey or imply any license under patent or other rights. Cypress products are not warranted nor intended to be used for medical, life support, life saving, critical control or safety applications, unless pursuant to an express written agreement with Cypress. Furthermore, Cypress does not authorize its products for use as critical components in life-support systems where a malfunction or failure may reasonably be expected to result in significant injury to the user. The inclusion of Cypress products in life-support systems application implies that the manufacturer assumes all risk of such use and in doing so indemnifies Cypress against all charges. PSoC® is a registered trademark, and PSoC Creator™ and Programmable System-on-Chip™ are trademarks of Cypress Semiconductor Corp. All other trademarks or registered trademarks referenced herein are property of the respective corporations.

This Source Code (software and/or firmware) is owned by Cypress Semiconductor Corporation (Cypress) and is protected by and subject to worldwide patent protection (United States and foreign), United States copyright laws and international treaty provisions. Cypress hereby grants to licensee a personal, non-exclusive, non-transferable license to copy, use, modify, create derivative works of, and compile the Cypress Source Code and derivative works for the sole purpose of creating custom software and or firmware in support of licensee product to be used only in conjunction with a Cypress integrated circuit as specified in the applicable agreement. Any reproduction, modification, translation, compilation, or representation of this Source Code except as specified above is prohibited without the express written permission of Cypress.

Disclaimer: CYPRESS MAKES NO WARRANTY OF ANY KIND, EXPRESS OR IMPLIED, WITH REGARD TO THIS MATERIAL, INCLUDING, BUT NOT LIMITED TO, THE IMPLIED WARRANTIES OF MERCHANTABILITY AND FITNESS FOR A PARTICULAR PURPOSE. Cypress reserves the right to make changes without further notice to the materials described herein. Cypress does not assume any liability arising out of the application or use of any product or circuit described herein. Cypress does not authorize its products for use as critical components in life-support systems where a malfunction or failure may reasonably be expected to result in significant injury to the user. The inclusion of Cypress' product in a life-support systems application implies that the manufacturer assumes all risk of such use and in doing so indemnifies Cypress against all charges.

Use may be limited by and subject to the applicable Cypress software license agreement.