Power Monitor Example Project
1.0

Features

- Voltage and load current measurement of 5 DC-DC power converters
- Automatic self-calibration using the provided API
- Configured to run on the PSoC Power Management Expansion Board Kit (CY8CKIT-035) plugged into the PSoC Development Kit (CY8CKIT-001)

General Description

This example project demonstrates the basic operation of the Power Monitor component.

Development Kit Configuration

1. The PSoC 3 or PSoC 5 Processor Module (CY8CKIT-009/ CY8CKIT-010) must be installed on the PSoC Development Kit (DVK)
2. The PSoC DVK must be configured for 5V operation using SW3
3. All VDDIO banks must be set to VDD using J2 through J5 on the PSoC DVK
4. *Do not connect the PSoC Power Management EBK yet*
5. Build the project and program the CY8C3866AXI-040 using a MiniProg3 programmer
6. Remove power from the PSoC DVK and attach the PSoC Power Management EBK to Port A of the PSoC DVK
7. The PSoC Power Management Expansion Board Kit (EBK) must be configured to draw power from the PSoC DVK (J5 jumper shorting positions 2 and 3)
8. Apply power to the PSoC DVK
9. Observe the measured voltage and load currents on the LCD
10. Observe that the “power good” LED on the PSoC DVK is lit

Project Configuration

The example project consists of the Power Monitor, VDAC, Status Register and Character LCD components. The design schematic is shown in Figure 1. The blue annotation components used on the left side of the schematic show the relevant components that are installed on the PSoC

Power Management EBK, most notably the power converters and the components used for voltage scaling and current sensing. The Character LCD component is used for displaying the measured voltage and current values. The VDAC component is used to supply a voltage to calibrate the ADC using the “cal” input terminal of the Power Monitor component. All of the voltage inputs from the component are mapped to PSoC GPIO pins P3[0], P4[0], P4[2], P4[4] and P4[6] respectively. The current inputs are mapped to GPIO pins P3[1], P4[1], P4[3], P4[5] and P4[7] respectively. The “pgood” output terminal of the component is mapped to GPIO pin P0[0]. Switch SW1 is used to switch between displaying voltages or load currents on the LCD. SW1 is mapped to GPIO pin P1[7]. When switch SW1 is pressed, the LCD displays the current values for all 5 converters and when switch is released, the LCD displays the voltage values for all 5 converters. The 4 power converters on the PSoC Power Management EBK are enabled by driving a logic high level out on GPIO pins P3[4], P3[5], P3[6] and P3[7] respectively.

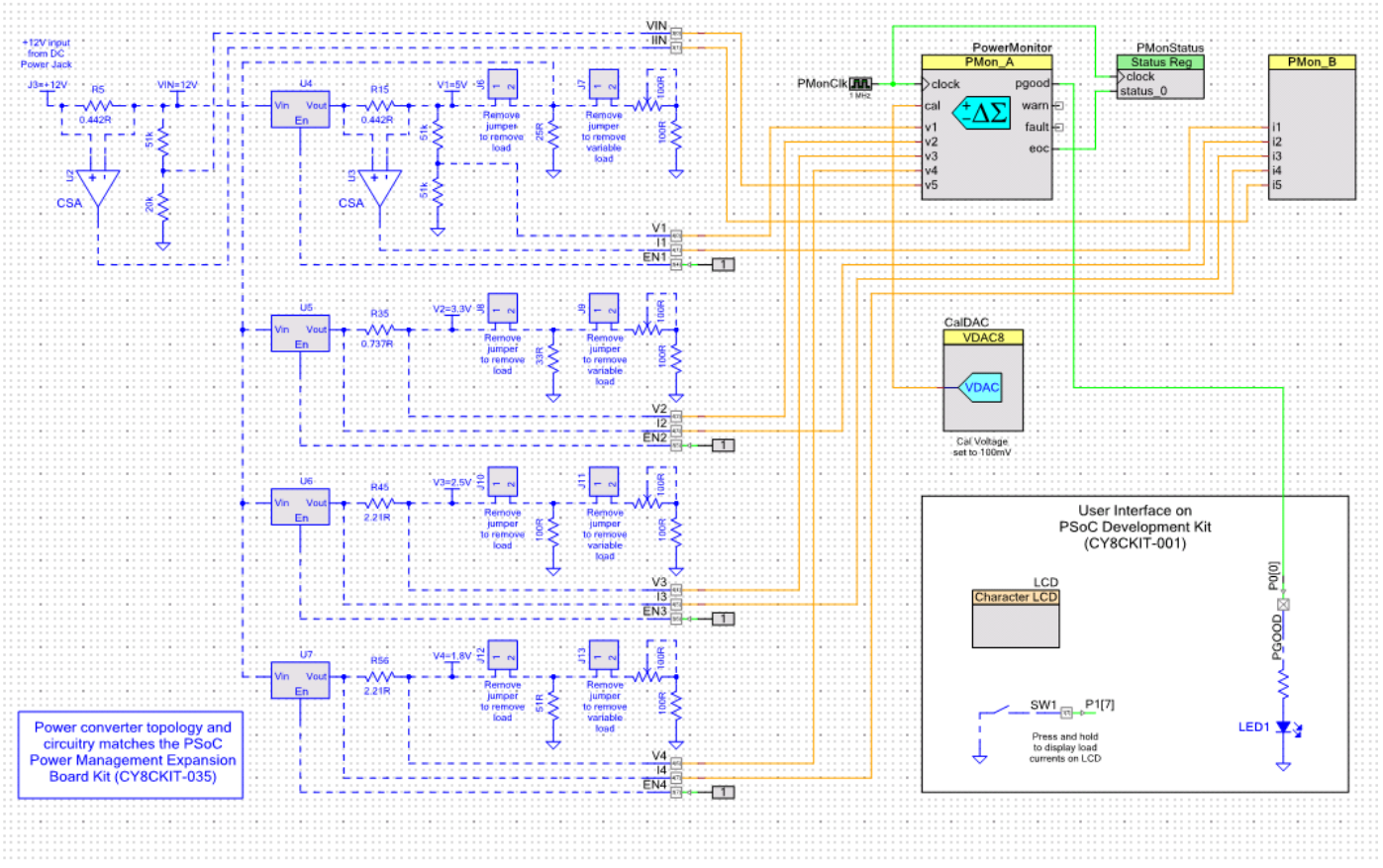

Figure 1. Example project design schematic

The Character LCD is used in its default configuration. The VDAC has been set to drive a constant 100mV output to match the ADC range selected in the Power Monitor component for current sensing. The Power Monitor is configured for measuring voltage and current of the power

converters installed on the PSoC Power Management EBK. The Power Monitor component configuration windows are shown below.

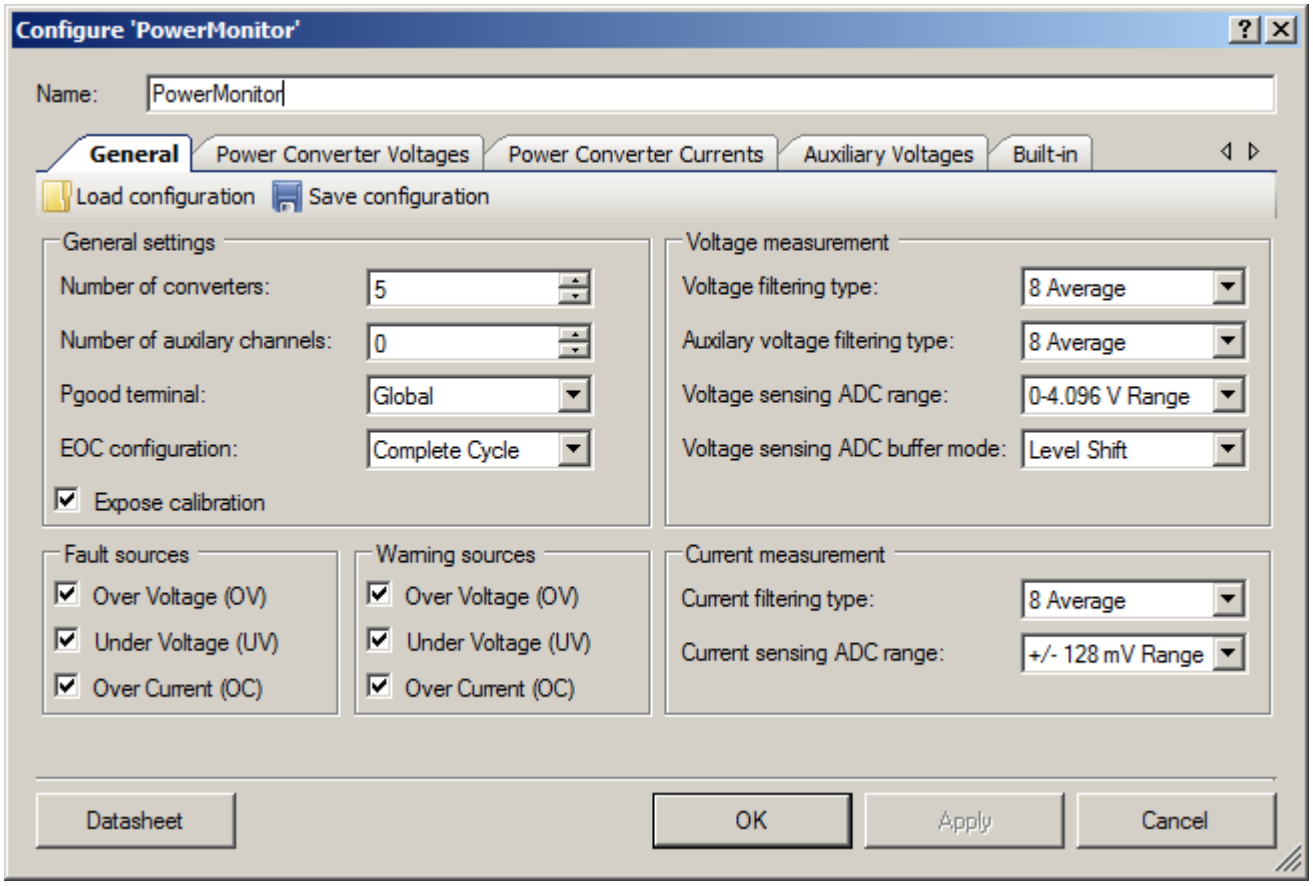

Figure 2. Power Monitor component configuration - General tab

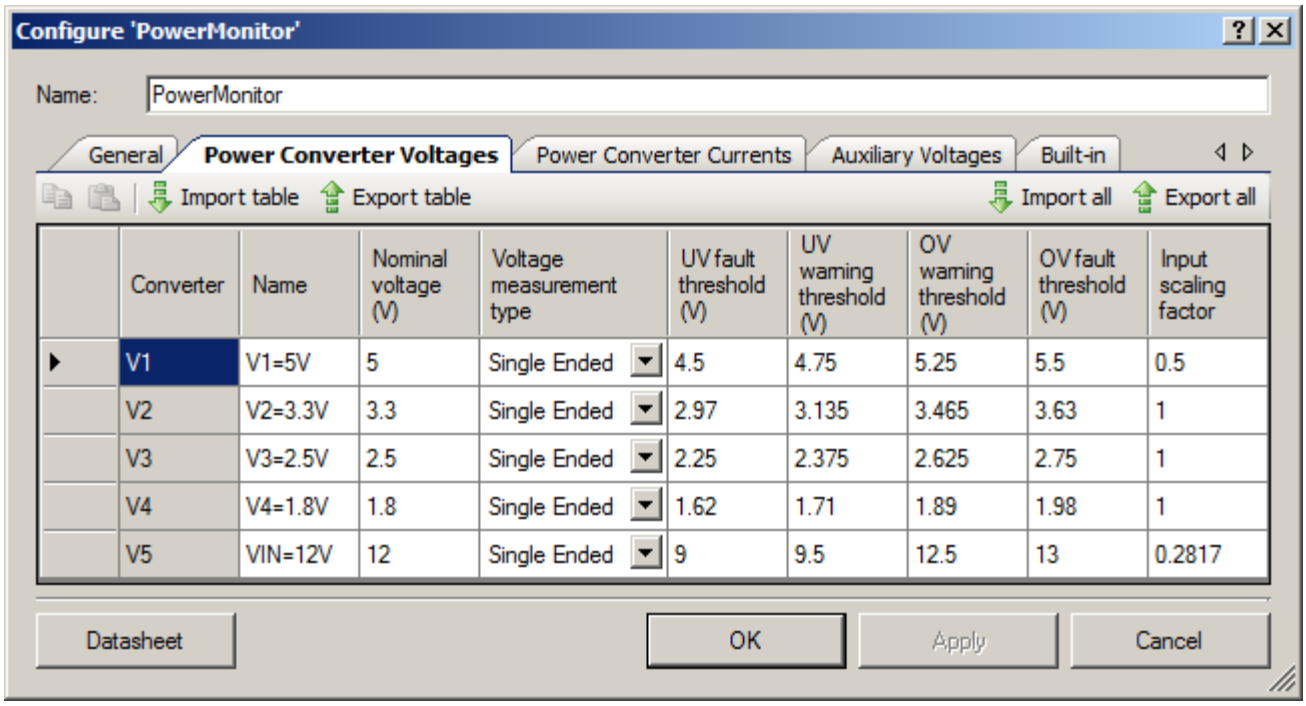

	Converter	Name	Nominal voltage (V)	Voltage measurement type	UV fault threshold (V)	UV warning threshold (V)	OV warning threshold (V)	OV fault threshold (V)	Input scaling factor
▶	V1	V1=5V	5	Single Ended	4.5	4.75	5.25	5.5	0.5
	V2	V2=3.3V	3.3	Single Ended	2.97	3.135	3.465	3.63	1
	V3	V3=2.5V	2.5	Single Ended	2.25	2.375	2.625	2.75	1
	V4	V4=1.8V	1.8	Single Ended	1.62	1.71	1.89	1.98	1
	V5	VIN=12V	12	Single Ended	9	9.5	12.5	13	0.2817

Figure 3. Power Monitor component configuration - Power Converter Voltages tab

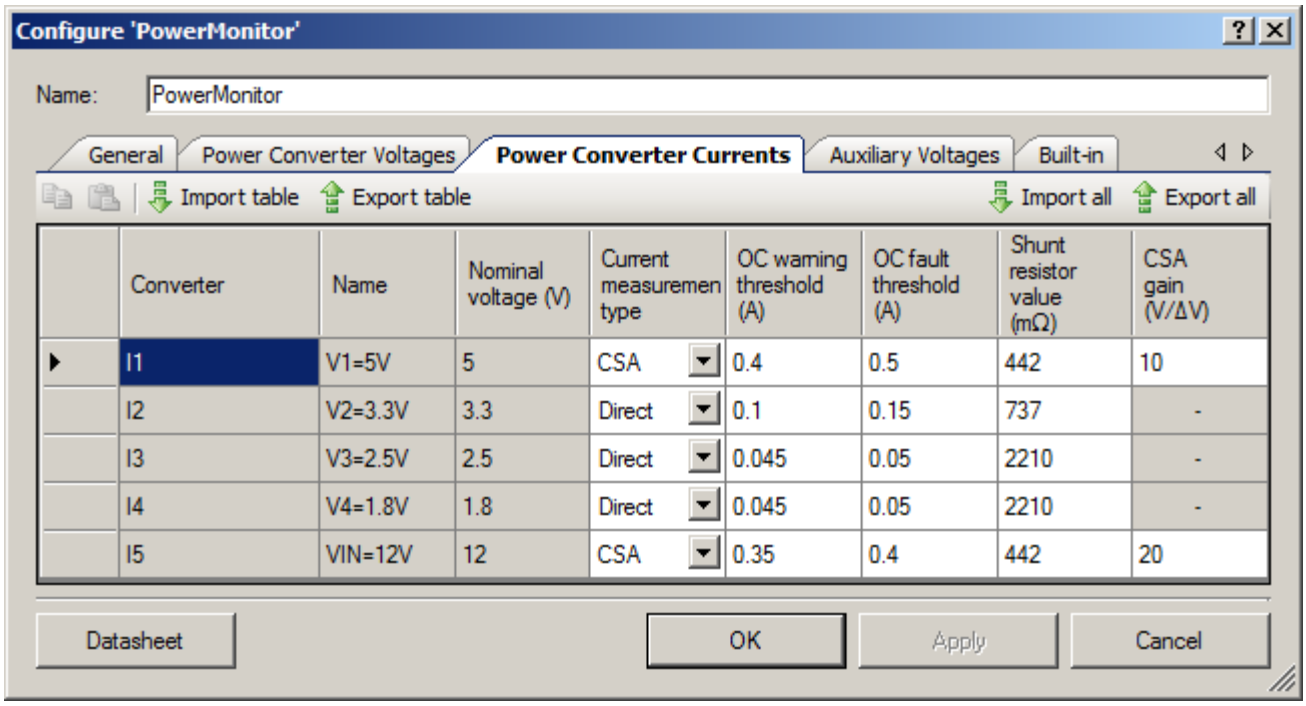

Figure 4. Power Monitor component configuration - Power Converter Currents tab

Project Description

In the main firmware routine, all components are started and interrupts are enabled to the CPU core as required by the Power Monitor component. For more information on the usage of the Character LCD and VDAC components, please refer to the corresponding component datasheets.

The Power Monitor component is configured for measuring voltages and currents using the PSoC Power Management EBK. The Power Monitor component continuously scans each voltage and current input in sequence and records the voltage and current in ADC counts. The PowerMonitor_GetConverterVoltage() and PowerMonitor_GetConverterCurrent() APIs convert ADC counts to actual voltage and current values. These APIs are used to display the measured voltage and current values for each of the converters on the Character LCD. By default, the Character LCD displays the voltage values for each of the converters (units are mV). When switch SW1 on the PSoC DVK is pressed, load current values are displayed on the LCD (units are mA).

Expected Results

The Character LCD should display the measured voltage and current values from the PSoC Power Management EBK. Sample LCD displays are shown below:

When SW1 is not pressed:

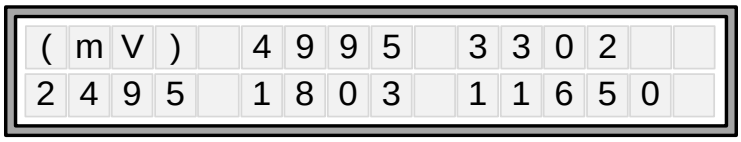

When SW1 is pressed:

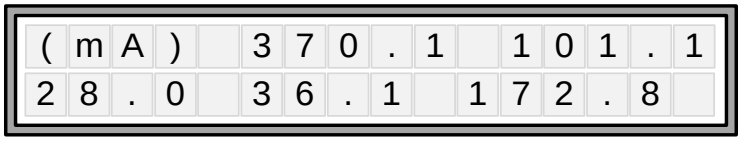

LED1 on the PSoC DVK should be lite indicating that all rails are within expected nominal range as defined by the UV Fault Threshold and OV Fault Threshold parameters.

© Cypress Semiconductor Corporation, 2013. The information contained herein is subject to change without notice. Cypress Semiconductor Corporation assumes no responsibility for the use of any circuitry other than circuitry embodied in a Cypress product. Nor does it convey or imply any license under patent or other rights. Cypress products are not warranted nor intended to be used for medical, life support, life saving, critical control or safety applications, unless pursuant to an express written agreement with Cypress. Furthermore, Cypress does not authorize its products for use as critical components in life-support systems where a malfunction or failure may reasonably be expected to result in significant injury to the user. The inclusion of Cypress products in life-support systems application implies that the manufacturer assumes all risk of such use and in doing so indemnifies Cypress against all charges.

PSoC® is a registered trademark, and PSoC Creator™ and Programmable System-on-Chip™ are trademarks of Cypress Semiconductor Corp. All other trademarks or registered trademarks referenced herein are property of the respective corporations.

Any Source Code (software and/or firmware) is owned by Cypress Semiconductor Corporation (Cypress) and is protected by and subject to worldwide patent protection (United States and foreign), United States copyright laws and international treaty provisions. Cypress hereby grants to licensee a personal, non-exclusive, non-transferable license to copy, use, modify, create derivative works of, and compile the Cypress Source Code and derivative works for the sole purpose of creating custom software and or firmware in support of licensee product to be used only in conjunction with a Cypress integrated circuit as specified in the applicable agreement. Any reproduction, modification, translation, compilation, or representation of this Source Code except as specified above is prohibited without the express written permission of Cypress.

Disclaimer: CYPRESS MAKES NO WARRANTY OF ANY KIND, EXPRESS OR IMPLIED, WITH REGARD TO THIS MATERIAL, INCLUDING, BUT NOT LIMITED TO, THE IMPLIED WARRANTIES OF MERCHANTABILITY AND FITNESS FOR A PARTICULAR PURPOSE. Cypress reserves the right to make changes without further notice to the materials described herein. Cypress does not assume any liability arising out of the application or use of any product or circuit described herein. Cypress does not authorize its products for use as critical components in life-support systems where a malfunction or failure may reasonably be expected to result in significant injury to the user. The inclusion of Cypress' product in a life-support systems application implies that the manufacturer assumes all risk of such use and in doing so indemnifies Cypress against all charges.

Use may be limited by and subject to the applicable Cypress software license agreement.