Operational Amplifier (OpAmp) Example

1.2

Features

Operational Amplifier with Power Setting High Power and Mode setting OpAmp mode.

General Description

This example project demonstrates the working of OpAmp with OpAmp mode and Power mode High Power.

Development kit configuration

1. This project is written for a 2X16 LCD display as the one available in the Cypress kit CY8CKIT-001.
2. Build the project and program the hex file on to the target device using MiniProg3.
3. Connect pins as described below and power cycle the device.
4. Observe the results on the LCD.

Project configuration

This project consists of OpAmp component with analog input and output pins. VDAC8 is used to give voltage input to the non-inverting input pin of the OpAmp and Pin_1 is connected to the inverting input pin of the OpAmp and is mapped to P0(3). Vout_1 pin is used to get the output voltage from OpAmp and is mapped to P0(1). Character LCD is used to display the test name and OpAmp configuration.

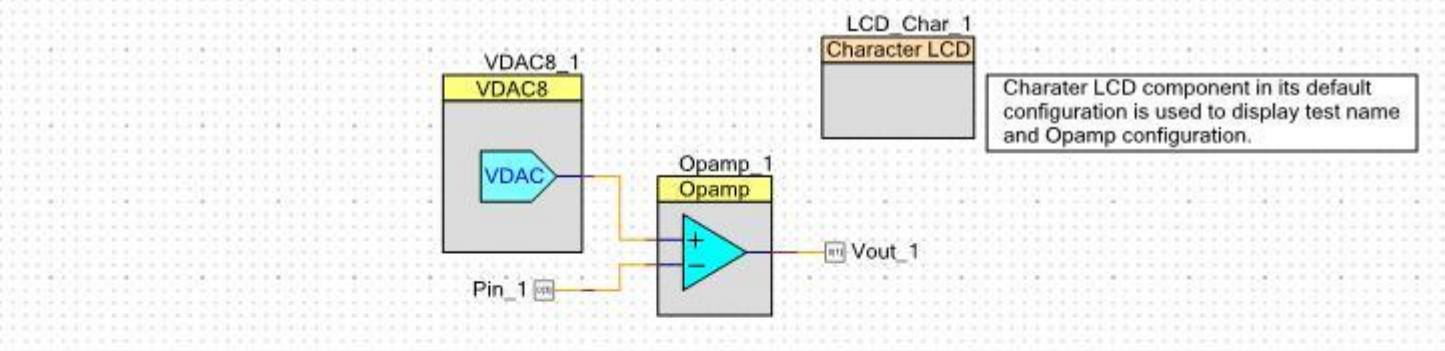

Opamp Non-Inverting Mode:

```
          R1              Rf
 +---------/\/\/\-------+--------/\/\/\-------+
 |                      |                     |
R11_GND          R12_Rf1_Pin_1          Vout_1_Rf2
```

Connect Rf resistor between Pin_1 and Vout_1
Connect R1 resistor between GND and Pin_1
(Gain = 1+ Rf/R1 , Gain = 2 if Rf = R1) (use R1, Rf = 10k Ohms or greater)

Parameter Settings:
Mode : Opamp
Power : High Power

Vout_1 (P0(1) of CY8CKIT-001) : Opamp output
Pin_1 (P0(3) of CY8CKIT-001) :Opamp Inverting input

The non-inverting input voltage to the Opamp is given using VDAC8.

Procedure :

1. This project is written for 2X16 display as the one available on CY8CKIT-001. It will need slight modification to run on larger displays.

2. Build the project and program the hex file on to the target device.

3. Use a multimeter in voltage mode to check the output of Opamp.

For Vin = 0.5 V. (VDAC output)
Expected output if R1= Rf is 1 V. (since R1=Rf, Gain = 2)
Vout = Vin * Gain

Project description

In the main function all components are started. The OpAmp mode is set to OpAmp and power is set to High power. The OpAmp here is used in Non-inverting mode, so registers R1 and Rf have to be connected to Pin_1 as shown in TopDesign description. For the proper VDAC8 and CharLCD component usage please refer to the corresponding datasheet.

Expected Results

Character LCD displays the following:
Opamp DEMO
Non-Inv Mode

For Vin = 0.5 V (Rf=R1)
Expected Vout on P0(1) = 1 V

© Cypress Semiconductor Corporation, 2009-2012. The information contained herein is subject to change without notice. Cypress Semiconductor Corporation assumes no responsibility for the use of any circuitry other than circuitry embodied in a Cypress product. Nor does it convey or imply any license under patent or other rights. Cypress products are not warranted nor intended to be used for medical, life support, life saving, critical control or safety applications, unless pursuant to an express written agreement with Cypress. Furthermore, Cypress does not authorize its products for use as critical components in life-support systems where a malfunction or failure may reasonably be expected to result in significant injury to the user. The inclusion of Cypress products in life-support systems application implies that the manufacturer assumes all risk of such use and in doing so indemnifies Cypress against all charges.

PSoC® is a registered trademark, and PSoC Creator™ and Programmable System-on-Chip™ are trademarks of Cypress Semiconductor Corp. All other trademarks or registered trademarks referenced herein are property of the respective corporations.

Any Source Code (software and/or firmware) is owned by Cypress Semiconductor Corporation (Cypress) and is protected by and subject to worldwide patent protection (United States and foreign), United States copyright laws and international treaty provisions. Cypress hereby grants to licensee a personal, non-exclusive, non-transferable license to copy, use, modify, create derivative works of, and compile the Cypress Source Code and derivative works for the sole purpose of creating custom software and or firmware in support of licensee product to be used only in conjunction with a Cypress integrated circuit as specified in the applicable agreement. Any reproduction, modification, translation, compilation, or representation of this Source Code except as specified above is prohibited without the express written permission of Cypress.

Disclaimer: CYPRESS MAKES NO WARRANTY OF ANY KIND, EXPRESS OR IMPLIED, WITH REGARD TO THIS MATERIAL, INCLUDING, BUT NOT LIMITED TO, THE IMPLIED WARRANTIES OF MERCHANTABILITY AND FITNESS FOR A PARTICULAR PURPOSE. Cypress reserves the right to make changes without further notice to the materials described herein. Cypress does not assume any liability arising out of the application or use of any product or circuit described herein. Cypress does not authorize its products for use as critical components in life-support systems where a malfunction or failure may reasonably be expected to result in significant injury to the user. The inclusion of Cypress' product in a life-support systems application implies that the manufacturer assumes all risk of such use and in doing so indemnifies Cypress against all charges.

Use may be limited by and subject to the applicable Cypress software license agreement.