ILO_Trim_1kHz Example Project
1.0

Features

- Fixed Function 1kHz ILO Trim
- ILO trimming to +/- 10% accuracy
- Displays the ILO error and the trimming status on the character LCD
- Direct connection of the ILO to a pin for external viewing using an oscilloscope

General Description

This project demonstrates the trimming of the 1 kHz ILO on PSoC3 and PSoC5LP devices when operating the component in Fixed Function mode. Once the component begins trimming, the program checks the status and the ILO error continuously and displays the results on the character LCD. The ILO can be viewed using an oscilloscope on pin P0[2]. The trimmed ILO should be within +/-10% of 1 kHz.

Development Kit Configuration

The following configuration instructions provide a guideline to test this design. For simplicity, the instructions describe the stepwise process to be followed when testing this design with the PSoC Development Kit (CY8CKIT-001) board.

1. Set SW3 to 3V and leave the rest of the board at default configuration. This ensures Vdda=Vddd=3V.
2. Connect the oscilloscope to P0[2].
3. Build the ILO_Trim_1kHz project and then program the hex file onto the PSoC device using the MiniProg3. After programming is complete, disconnect the MiniProg3.
4. Reset the PSoC device.

Project Configuration

The top design schematic for this project is shown in Figure 1. ILO_Trim is configured in Fixed Function mode and the ILO is configured as 1 kHz in the design-wide resource manager. The reference clock Ref_Clk is 50 kHz sourced from the 3 MHz IMO. 50 kHz is the minimum clock required to trim the 1 kHz ILO, and since it is sourced from the 3 MHz IMO, it has an error range of +/- 1%.

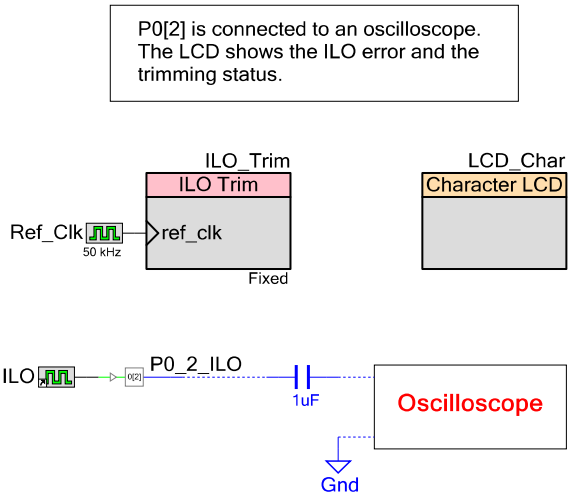

Figure 1. TopDesign Schematic

The ILO is also connected to pin P0[2] so that it can be viewed using an oscilloscope. In addition to this, the error of the ILO and the trimming status can be viewed on the character LCD.

Project Description

The c code for this project goes through the following steps. The LCD_Char and ILO_Trim components are started and the trim routine is called. The global interrupt is then enabled for the embedded ISR component present in ILO_Trim. The code continuously calls CheckError() and CheckStatus() in an infinite loop and displays the values on the LCD.

Expected Results

The ILO should trim to +/- 10% of 1 kHz. During trimming, the LCD displays the current ILO error in percent, and the status shows that it is still trimming.

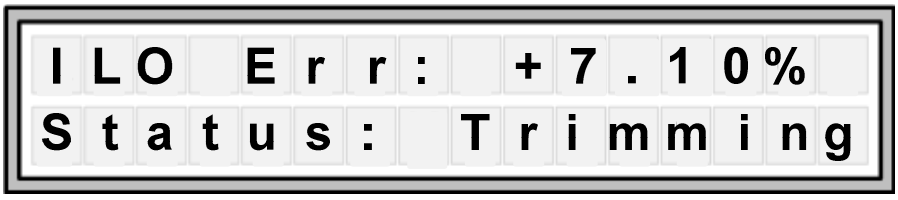

When it is successfully trimmed, the LCD displays the ILO error to be within +/- 10%, and the status shows that the trim is accurate.

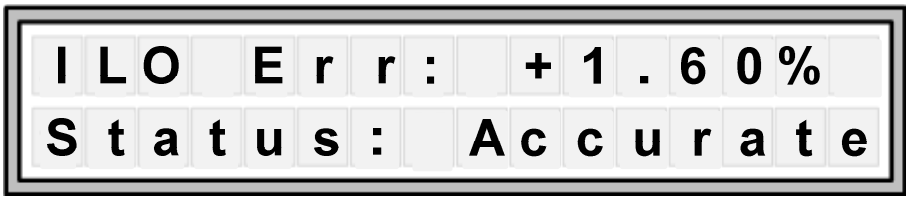

Related Material

Application Notes

- AN80248 - PSoC® 3 / PSoC 5LP: Improving the Accuracy of Internal Oscillators