Auto FW Fan Control with Alert Example Project

1.0

Features

- Full featured fan control application.
- Control completely in firmware.
- Fan Stall and Speed Regulation Failure alerts

General Description

This example project demonstrates the unique benefit of the Fan Controller component whereby the fan control algorithm is implemented in firmware inside PSoC. This example project also demonstrates the component's ability to detect fan stall and other fault conditions. It is intended for users who need to get up and running quickly on a full-featured fan control application.

Development Kit Configuration

The following configuration instructions provide a guideline to test this design. For simplicity, the instructions describe the stepwise process to be followed when testing this design with the PSoC Development Kit (CY8CKIT-001) board and CY8CKIT-038. CY8CKIT-038 uses connected Character LCD with I^2C interface to display the output of example project.

1. Connect two 4-Wire Fans to the appropriate pins as shown in Figure 1. Note that if using the PSoC Thermal Management EBK (CY8CKIT-036), this should be connected to Port A on the CY8CKIT-001.
2. Connect P1[6] and P1[7] to SW1 and SW2 on the board.
3. Build the project and load it to PSoC 4 device.
4. Use SW1 or SW2 to increase or decrease of desired speed for fans and observe output on the LCD. Observe P0_0 output using an oscilloscope.

Project Configuration

The TopDesign schematic looks as shown in Figure 1 below. The Character LCD with I^2C Interface is configured in its default mode. The FanController is set to Automatic Firmware (CPU) Control. Stall and Speed Alerts are enabled in the 'Basic' tab of the configuration window. In the 'Fans' tab, 2 10-bit PWM outputs are defined. It is crucial to enter two data-points from the duty-cycle-to-RPM curve corresponding to each fan being controlled. These values are typically provided by the fan manufacturer and documented in the fan datasheet. SW1 and SW2 are chosen as digital input pins, and control the RPM of the fans. The tach_1 and tach_2 digital input pins serve as indicators of the Fan RPM; while digital output pins,

pwm_1 and pwm_2, drive the two fans. The ‘alert’ output of the component is connected to an ISR and a digital output pin which can be observed on an oscilloscope. Finally, the 1-bit Status Register is configured to be sticky so that the EOC pulse is not missed.

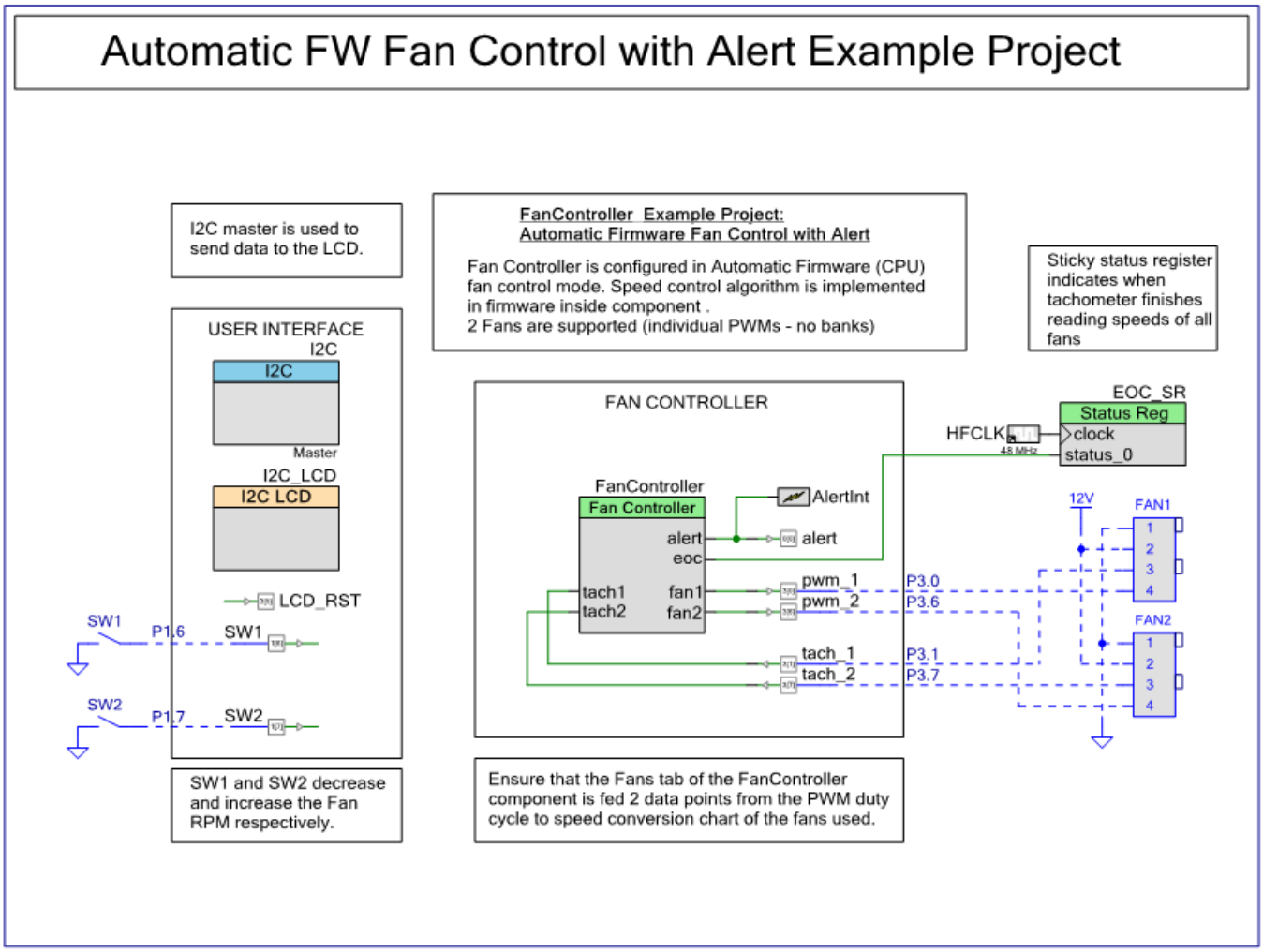

Figure 1. TopDesign schematic

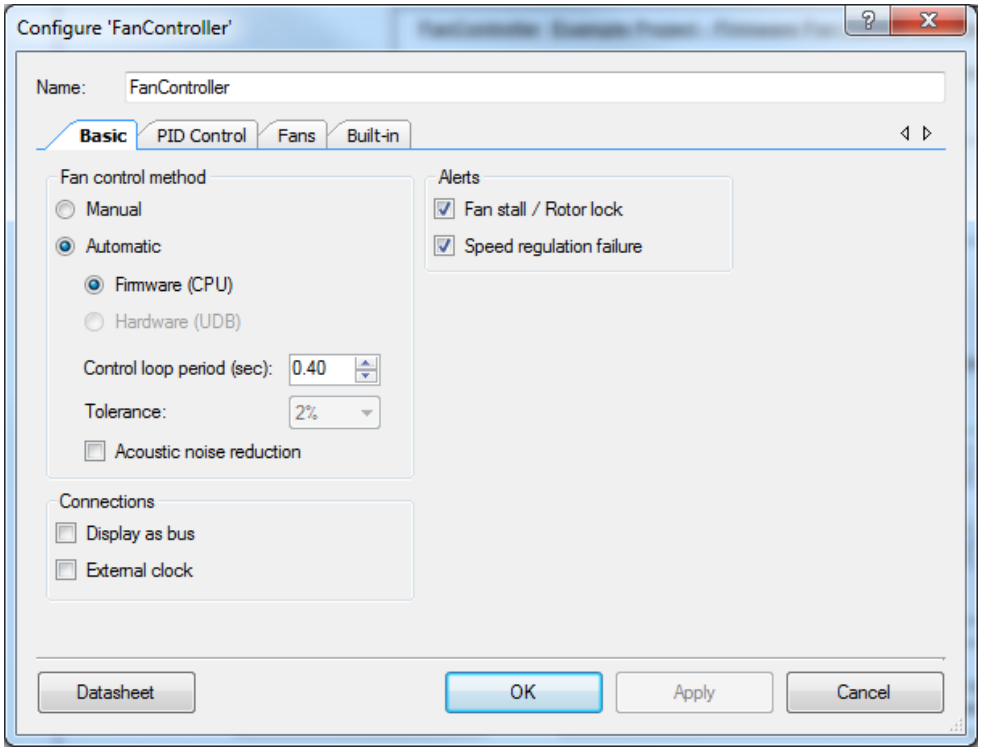
Configure 'FanController'
Name: FanController
Basic
PID Control
Fans
Built-in
Fan control method
Manual
Automatic
Firmware (CPU)
Hardware (UDB)
Control loop period (sec): 0.40
Tolerance: 2%
Acoustic noise reduction
Alerts
Fan stall / Rotor lock
Speed regulation failure
Connections
Display as bus
External clock
Datasheet
OK
Apply
Cancel

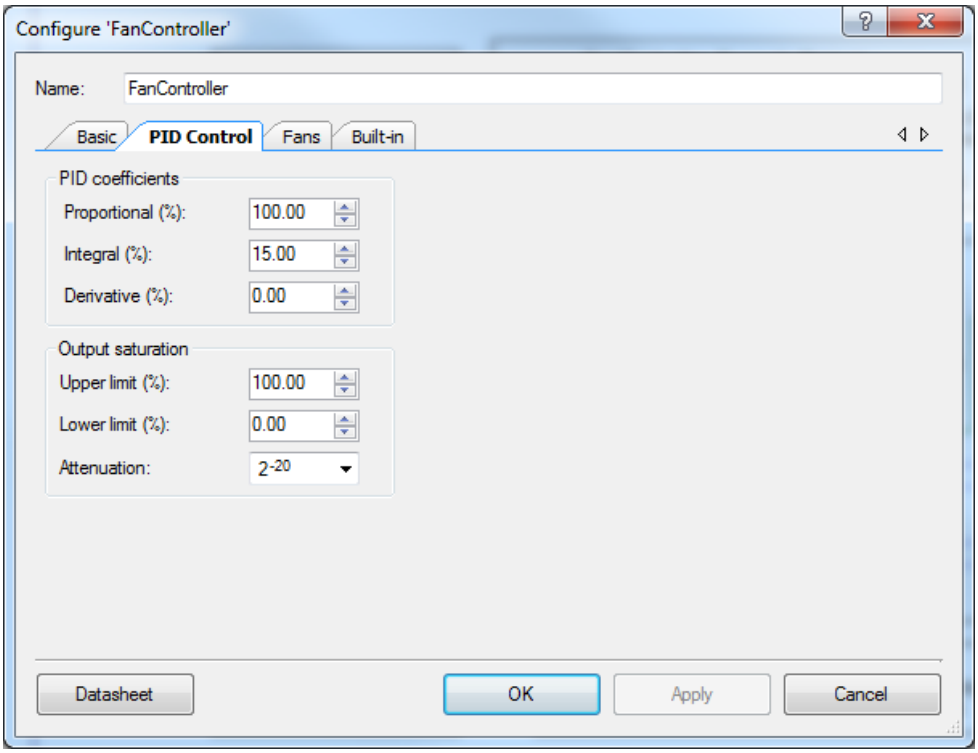
Configure 'FanController'
Name: FanController
Basic
PID Control
Fans
Built-in
PID coefficients
Proportional (%): 100.00
Integral (%): 15.00
Derivative (%): 0.00
Output saturation
Upper limit (%): 100.00
Lower limit (%): 0.00
Attenuation: 2-20
Datasheet
OK
Apply
Cancel

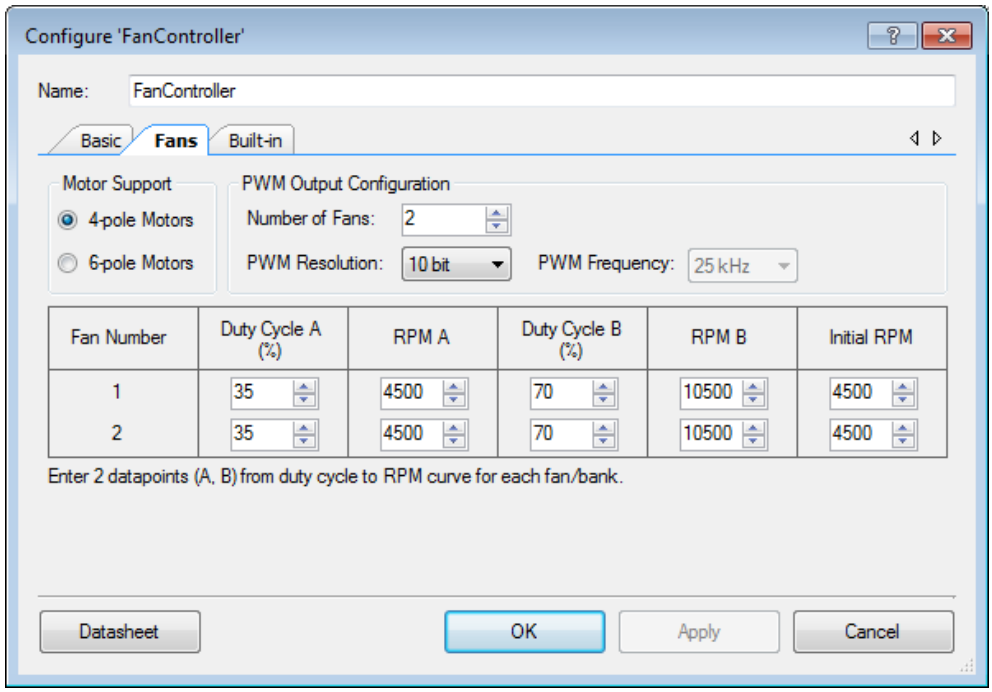

Figure 2. FanController component configuration

Project Description

In the main.c file, the FanController and LCD components are started and the desired initial RPM is set for both fans. Global Interrupts, Fan Alerts, and Alert interrupt are enabled. If a Stall/Speed regulation failure is detected, a flag is set, and this flag is polled in the forever loop. Further, the inputs from SW1 and SW2 are read and the RPM of the fans is set accordingly.

Expected Results

The Fan Controller component will automatically maintain speed regulation. Fault conditions such as fan stall, broken or disconnected wiring, or attempted use of the fan outside its electromechanical limits are automatically detected by the component and flagged as alerts.

SW1 decreases fan speed, SW2 increases fan speed. Fault conditions are displayed on the LCD display and are indicated via a pulse on the ‘alert’ output pin P0[0].

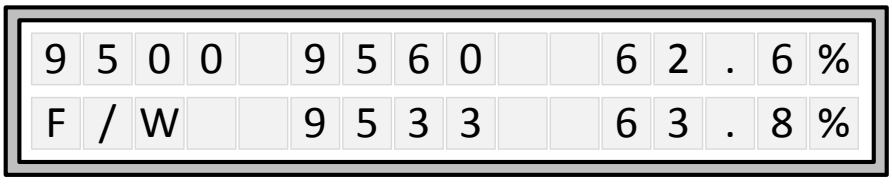

Figure 3. Expected LCD output

Cypress Semiconductor
198 Champion Court
San Jose, CA 95134-1709

Phone : 408-943-2600
Fax : 408-943-4730
Website : www.cypress.com

© Cypress Semiconductor Corporation, 2012. The information contained herein is subject to change without notice. Cypress Semiconductor Corporation assumes no responsibility for the use of any circuitry other than circuitry embodied in a Cypress product. Nor does it convey or imply any license under patent or other rights. Cypress products are not warranted nor intended to be used for medical, life support, life saving, critical control or safety applications, unless pursuant to an express written agreement with Cypress. Furthermore, Cypress does not authorize its products for use as critical components in life-support systems where a malfunction or failure may reasonably be expected to result in significant injury to the user. The inclusion of Cypress products in life-support systems application implies that the manufacturer assumes all risk of such use and in doing so indemnifies Cypress against all charges. PSoC® is a registered trademark, and PSoC Creator™ and Programmable System-on-Chip™ are trademarks of Cypress Semiconductor Corp. All other trademarks or registered trademarks referenced herein are property of the respective corporations.

This Source Code (software and/or firmware) is owned by Cypress Semiconductor Corporation (Cypress) and is protected by and subject to worldwide patent protection (United States and foreign), United States copyright laws and international treaty provisions. Cypress hereby grants to licensee a personal, non-exclusive, non-transferable license to copy, use, modify, create derivative works of, and compile the Cypress Source Code and derivative works for the sole purpose of creating custom software and or firmware in support of licensee product to be used only in conjunction with a Cypress integrated circuit as specified in the applicable agreement. Any reproduction, modification, translation, compilation, or representation of this Source Code except as specified above is prohibited without the express written permission of Cypress.

Disclaimer: CYPRESS MAKES NO WARRANTY OF ANY KIND, EXPRESS OR IMPLIED, WITH REGARD TO THIS MATERIAL, INCLUDING, BUT NOT LIMITED TO, THE IMPLIED WARRANTIES OF MERCHANTABILITY AND FITNESS FOR A PARTICULAR PURPOSE. Cypress reserves the right to make changes without further notice to the materials described herein. Cypress does not assume any liability arising out of the application or use of any product or circuit described herein. Cypress does not authorize its products for use as critical components in life-support systems where a malfunction or failure may reasonably be expected to result in significant injury to the user. The inclusion of Cypress' product in a life-support systems application implies that the manufacturer assumes all risk of such use and in doing so indemnifies Cypress against all charges.

Use may be limited by and subject to the applicable Cypress software license agreement.