External Memory Interface (EMIF) example project

1.20

Features

- Generation data sequence for CPU and DMA transactions
- Software compare sent and received data after transactions
- Indicate Error and Pass state of comparisons
- Possibility of the EMIF Component output signals handling

General Description

This example project demonstrates EMIF component usage. This example project was performed with an Asynchronous SRAM on a prototype QVGA board and a DVK. EMIF consistently execute some write/read transactions (PACKET define).

Development kit configuration

1. The PSoC3/5 DVK CY8CKIT-001 board besides default configuration should have LCD power jumper (J12) switch in OFF mode.
2. Processor Module shouldn't have C18 capacitor (CMOD).
3. Connect pins as described below.
4. Build the project and program the hex file on to the target device.
5. Power cycle the device and observe the results on the LEDs.

Project configuration

This project consists of one EMIF component, one digital input pin, two digital output pins, one DMA component, one Interrupt (cy_isr) component. The top design schematic is shown on the Figure 1.

Parameters used:

- External memory type – Asynchronous
- Address width – 24–bit
- Data width – 8–bit

- External memory speed – 30 nsec

Port/Pin configuration:

- Port2 - Data LSB

- Port5 - Address LSB
- Port4 - Address MID
- Port3 - Address MSB

- Port12[7] - Control wen
- Port12[6] - Control cen
- Port12[5] - Control oen

- Port1[7] - button pin connected to SW1
- Port1[6] - Error_Pin connected to LED1
- Port1[5] - Pass_Pin connected to LED2

Software Defines on main.c file:

- INIT_VALUE - first sent value
- PACKET - number of read/write transactions with external memory
- LED_DELAY - time delay of LED light in milliseconds
- BURST_LENGTH - DMA burst length

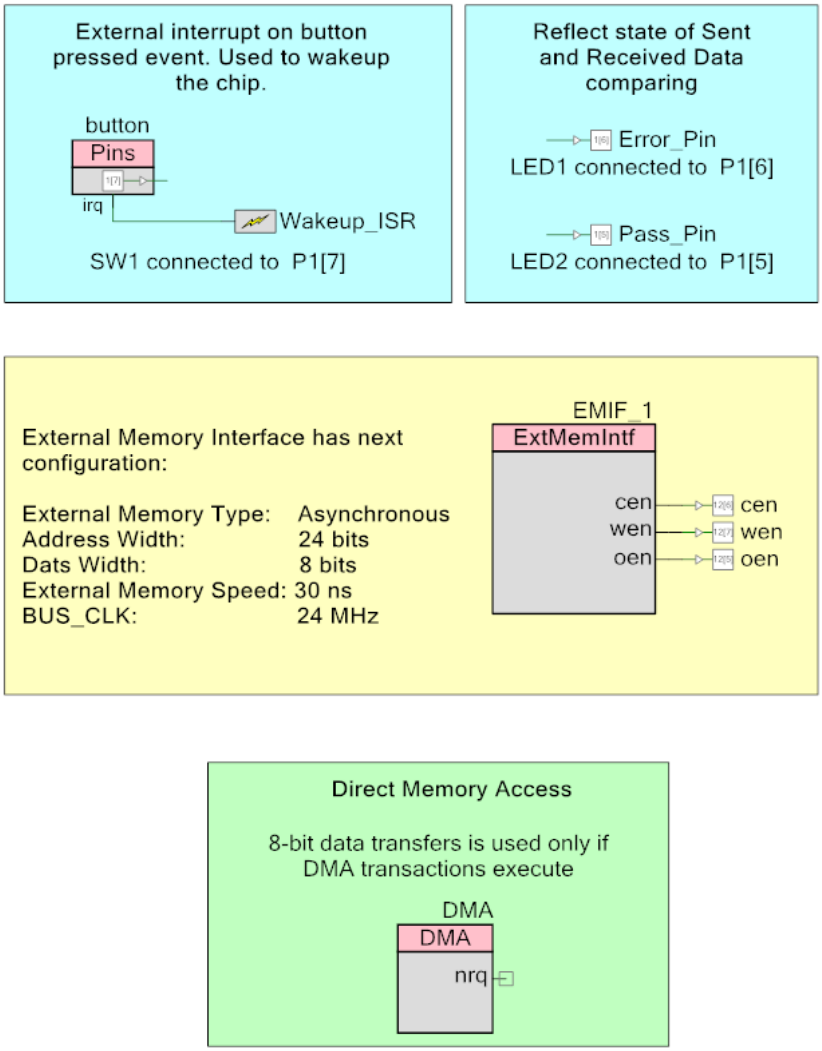

Figure 1. Top design schematic.

The DMA Component has the default configuration. The EMIF_1 component configuration (Figure 2):

- External Memory Type: - Asynchronous
- Address Width: - 24 bits
- Data Width: - 8 bits
- External Memory Speed: - 30 ns
- BUS_CLK: - 24 MHz

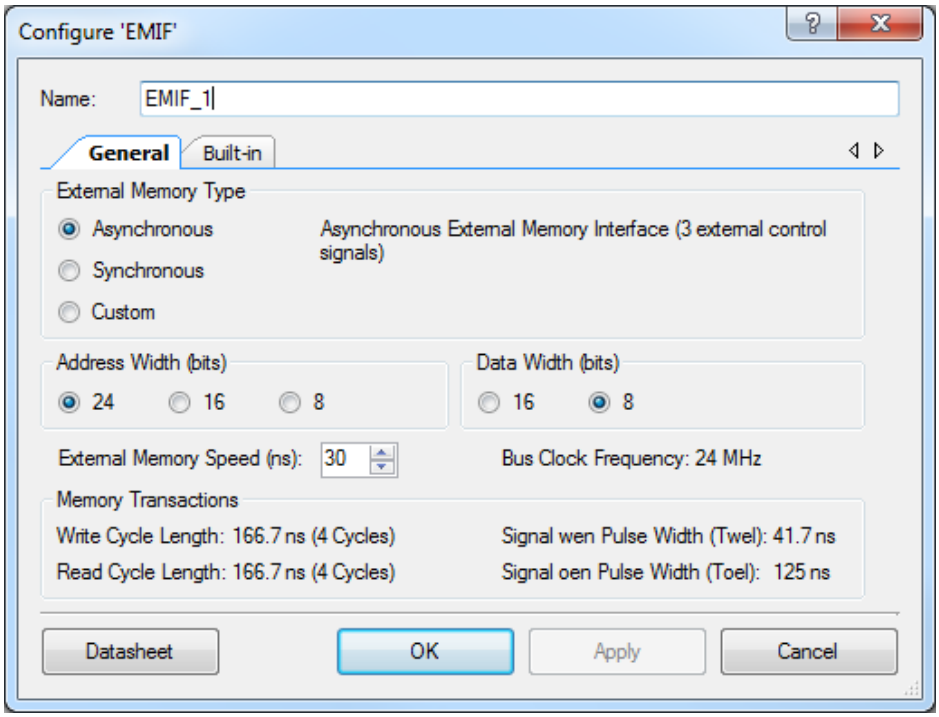

Figure 2. EMIF_1 Component Configuration Window

Project description

In the project EMIF will write data to external memory. When switch SW1 is pressed, the EMIF will read back the data back from the external memory. Data written and read back data will be compared. The result of the comparison will be shown by Error (LED1) or Pass (LED2) LEDs for up to two second. After that EMIF will write data to external memory through DMA. When switch SW1 is pressed, the EMIF will read back the data from the external memory through DMA. Data written and read back data will be compared. The result of the comparison will be shown by Error (LED1) or Pass (LED2) LEDs.

Execution steps:

- Write some data to memory
- EMIF sleep
- Wait on SW1 pressed
- EMIF wakeup
- Read data from memory
- Compare read back data with wrote data and display result of compare on LEDs during two seconds

- Write some data to memory by DMA
- EMIF sleep
- Wait on SW1 pressed
- EMIF wakeup
- Read data from memory by DMA
- Compare read back data with wrote data and display result of compare on LEDs

Expected results

If SW1 pressed LED2 should be lighted for 2 seconds. After SW1 pressed again LED2 should be lighted. It reflects correct work of EMIF component.

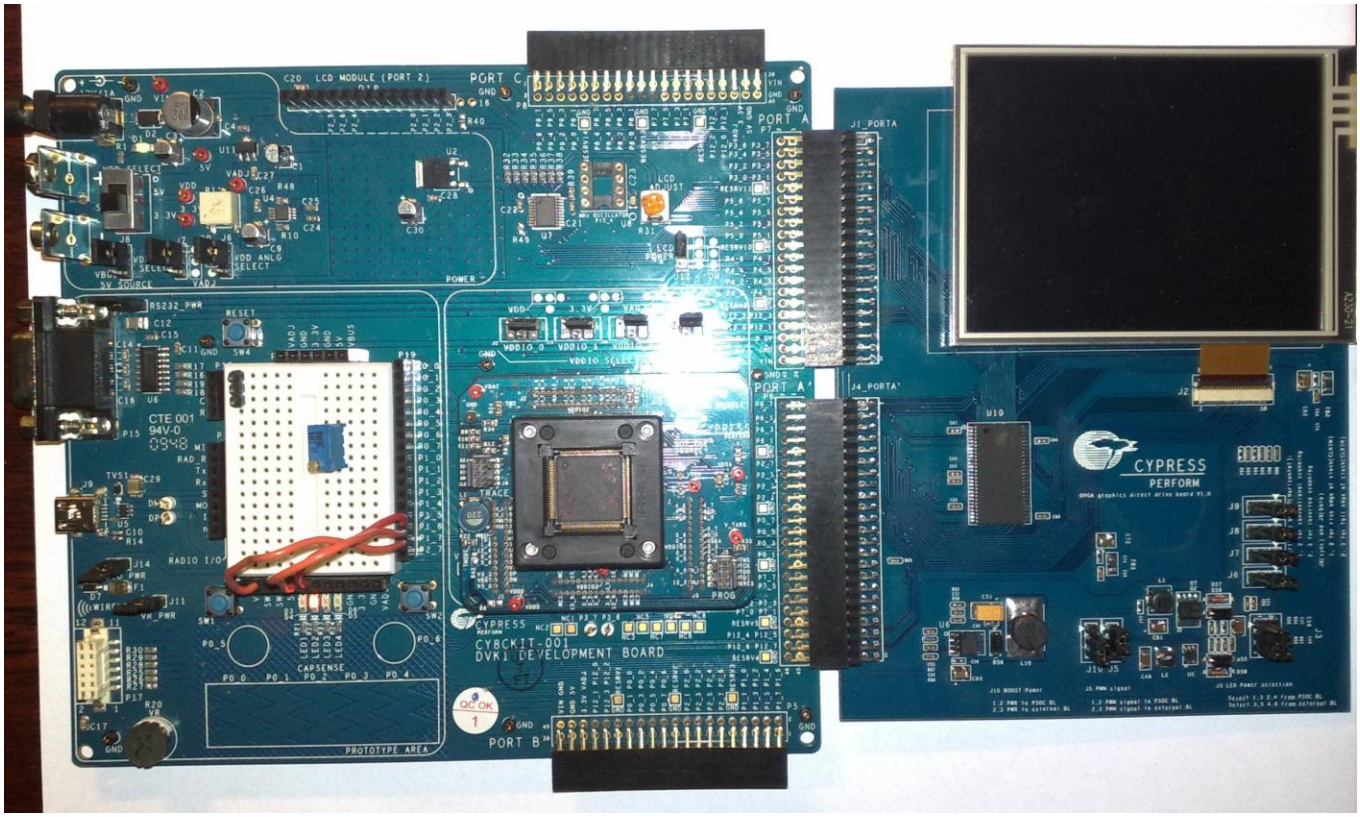

© Cypress Semiconductor Corporation, 2009-2013. The information contained herein is subject to change without notice. Cypress Semiconductor Corporation assumes no responsibility for the use of any circuitry other than circuitry embodied in a Cypress product. Nor does it convey or imply any license under patent or other rights. Cypress products are not warranted nor intended to be used for medical, life support, life saving, critical control or safety applications, unless pursuant to an express written agreement with Cypress. Furthermore, Cypress does not authorize its products for use as critical components in life-support systems where a malfunction or failure may reasonably be expected to result in significant injury to the user. The inclusion of Cypress products in life-support systems application implies that the manufacturer assumes all risk of such use and in doing so indemnifies Cypress against all charges.

PSoC® is a registered trademark, and PSoC Creator™ and Programmable System-on-Chip™ are trademarks of Cypress Semiconductor Corp. All other trademarks or registered trademarks referenced herein are property of the respective corporations.

Any Source Code (software and/or firmware) is owned by Cypress Semiconductor Corporation (Cypress) and is protected by and subject to worldwide patent protection (United States and foreign), United States copyright laws and international treaty provisions. Cypress hereby grants to licensee a personal, non-exclusive, non-transferable license to copy, use, modify, create derivative works of, and compile the Cypress Source Code and derivative works for the sole purpose of creating custom software and or firmware in support of licensee product to be used only in conjunction with a Cypress integrated circuit as specified in the applicable agreement. Any reproduction, modification, translation, compilation, or representation of this Source Code except as specified above is prohibited without the express written permission of Cypress.

Disclaimer: CYPRESS MAKES NO WARRANTY OF ANY KIND, EXPRESS OR IMPLIED, WITH REGARD TO THIS MATERIAL, INCLUDING, BUT NOT LIMITED TO, THE IMPLIED WARRANTIES OF MERCHANTABILITY AND FITNESS FOR A PARTICULAR PURPOSE. Cypress reserves the right to make changes without further notice to the materials described herein. Cypress does not assume any liability arising out of the application or use of any product or circuit described herein. Cypress does not authorize its products for use as critical components in life-support systems where a malfunction or failure may reasonably be expected to result in significant injury to the user. The inclusion of Cypress' product in a life-support systems application implies that the manufacturer assumes all risk of such use and in doing so indemnifies Cypress against all charges.

Use may be limited by and subject to the applicable Cypress software license agreement.