Please note that Cypress is an Infineon Technologies Company.
The document following this cover page is marked as “Cypress” document as this is the company that originally developed the product. Please note that Infineon will continue to offer the product to new and existing customers as part of the Infineon product portfolio.

Continuity of document content
The fact that Infineon offers the following product as part of the Infineon product portfolio does not lead to any changes to this document. Future revisions will occur when appropriate, and any changes will be set out on the document history page.

Continuity of ordering part numbers
Infineon continues to support existing part numbers. Please continue to use the ordering part numbers listed in the datasheet for ordering.

CE95272 – PSoC 4 SAR ADC and Differential Amplifier

Objective

This code example demonstrates the use of two opamps as a differential amplifier, and the use of Sequencing SAR ADC to read from either a differential or single-ended input.

Overview

This example shows how the Sequencing Successive Approximation ADC (SAR ADC) can be used in single-ended and differential input modes. It also demonstrates the use of Serial Communication Block (SCB) as a UART to communicate with a PC host.

Requirements

Tool: PSoC Creator™ 4.2 or higher

Programming Language: C (Arm® GCC 5.4)

Associated Parts: PSoC® 4

Hardware: CY8CKIT-041, CY8CKIT-042, CY8CKIT-042-BLE, CY8CKIT-046

Design

The example demonstrates the use of the SAR ADC Component that continually scans four input channels. Two of these channels are configured in differential mode, and the remaining two are configured in single-ended mode. The first differential channel is connected to the output of a differential amplifier. Two opamps along with one 2.2-kΩ resistor and two 10-kΩ resistors are used to set up the differential amplifier with a gain of 10. The remaining channels are directly connected to input signals.

The ADC generates an interrupt when the voltage from channel 1 is outside the limit (min 250 mV, max 750 mV). Note that the 250 mV – 750 mV limit applies to the voltage that the ADC is getting as the input, not the voltages before the opamp. Therefore, if the input voltages before the opamp (preamp_1 and preamp_2) are outside the 25 mV – 75 mV range (considering a 10 gain from the opamp), the LED will light up.

The firmware converts the ADC output (in units of counts) to voltage (in units of millivolts). The SCB Component is set up in the UART mode to communicate this result back to the user through a terminal emulator such as PuTTY or HyperTerminal. The PSoC Creator top design schematic is shown in Figure 1.

Figure 1. Top Design Schematic

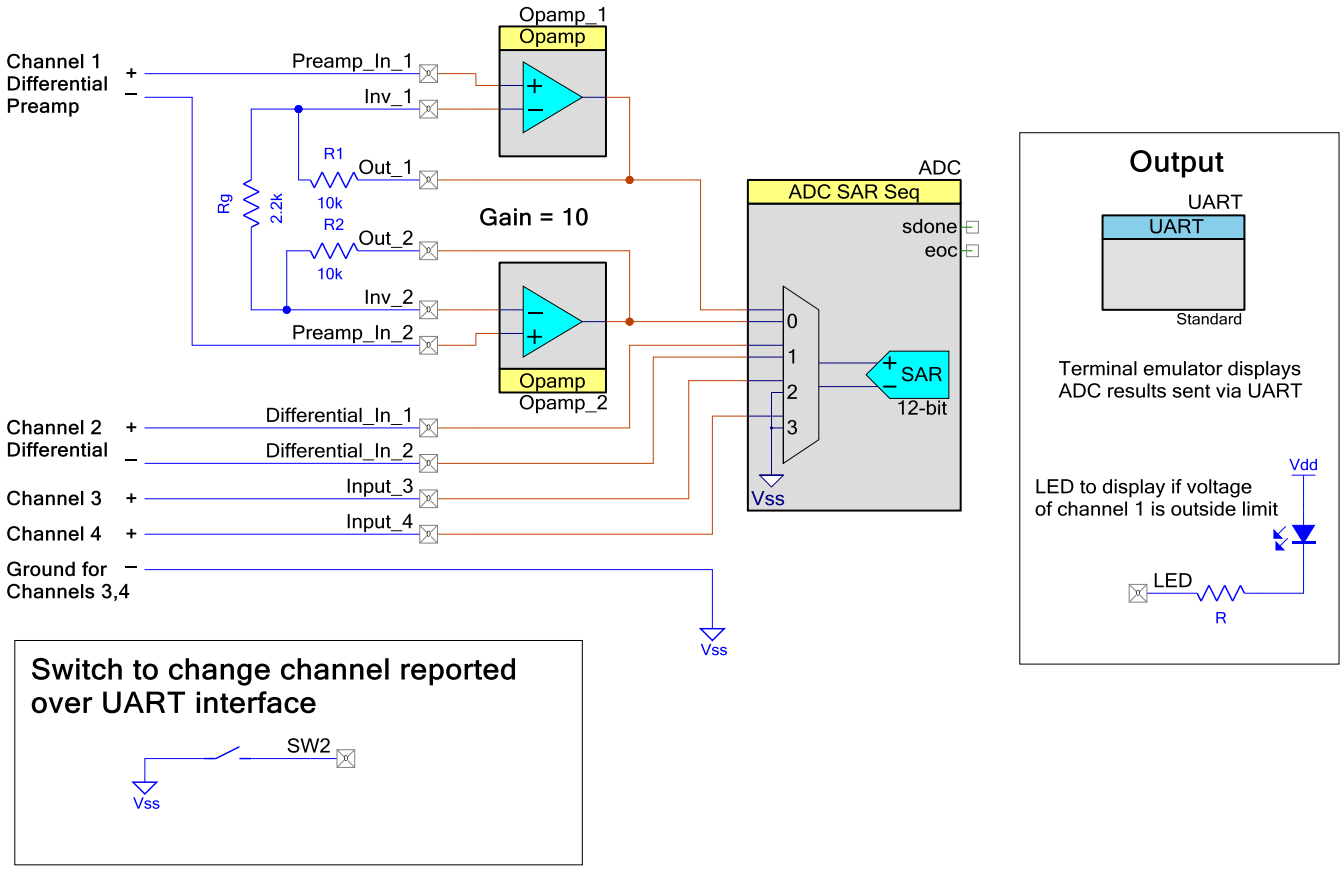

Kit Configuration and Pin Assignments

1. To select the appropriate device, right-click the project name in the Workspace Explorer and select **Device Selector** from the menu. The proper device for the supported kits is shown in Table 1.

Table 1. Development Kits and Associated Devices

Development Kit	Device
CY8CKIT-042	CY8C4245AXI-483
CY8CKIT-042-BLE	CY8C4247LQI-BL483
CY8CKIT-046	CY8C4248BZI-L489
CY8CKIT-041	CY8C4146AZI-S433

2. The project is designed for CY8CKIT-042, and therefore, the pin assignments are made accordingly. Most pins can be changed by selecting the **Pins** tab of the “Design Wide Resources file under the project name. The pin assignments for a specific kit are shown in Table 2.

Table 2. Pin Assignments for Compatible PSoC 4 kits

Pin Name	Development Kit			
	CY8CKIT-042	CY8CKIT-042-BLE	CY8CKIT-046	CY8CKIT-041
Out_1	P1[2]	P2[2]	P1[2]	P1[2]
Out_2	P1[3]	P2[3]	P1[3]	P1[3]
Differential_in_1	P2[0]	P3[0]	P2[0]	P2[0]
Differential_in_2	P2[1]	P3[1]	P2[1]	P2[1]
Input_3	P2[2]	P3[2]	P2[2]	P2[2]
Input_4	P2[3]	P3[3]	P2[3]	P2[3]
\UART:tx\	P0[5]*	P1[5]	P3[1]	P0[5]
Preamp_In_1	P1[0]	P2[0]	P1[0]	P1[0]
Preamp_In_2	P1[5]	P2[5]	P1[7]	P1[5]
Inv_1	P1[1]	P2[1]	P1[1]	P1[1]
Inv_2	P1[4]	P2[4]	P1[4]	P1[4]
SW2	P0[7]	P2[7]	P0[7]	P0[7]
LED	P1[6]	P2[6]	P5[2]	P3[4]

*Connect P0[5] (\UART:tx\) of CY8CKIT-042 to the Tx terminal P12[6] on header J8 of CY8CKIT-042.

Figure 2 shows the pin connections along with the external resistors for CY8CKIT-042.

Figure 2. Pin Connections for CY8CKIT-042

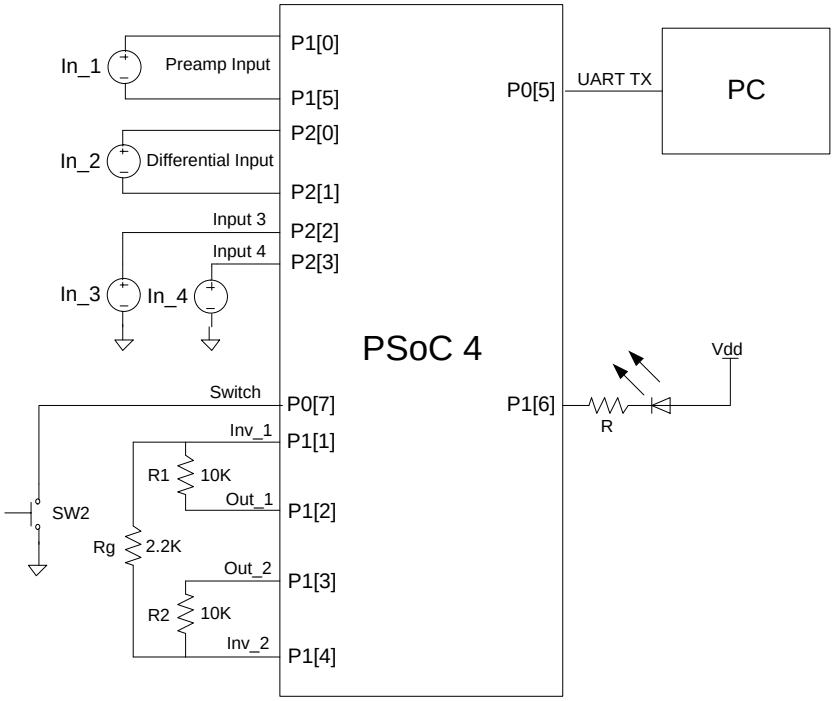

3. Set jumper J9 (J16 for CY8CKIT-042-BLE) to the 5.0-V position.
4. Connect all external resistors (R1 = 10 kΩ, R2 = 10 kΩ, and Rg = 2.2 kΩ) as shown in the top design schematic.

Components

Table 3 lists the PSoC Creator Components used in this example, as well as the hardware resources used by each.

Table 3. PSoC Creator Components

Component	Instance name	Hardware Resources
Opamp	Opamp_1/Opamp_2	CTBm
Sequencing SAR ADC	ADC	Sequencing SAR ADC
UART	UART	SCB
Digital Input Pin	SW2	GPIO
Digital Input Pin	LED	GPIO

The opamps are configured for high stability, high power, and Output to pin mode (which enables 10-mA output current), as shown in Figure 3.

Figure 3. Opamp Configuration

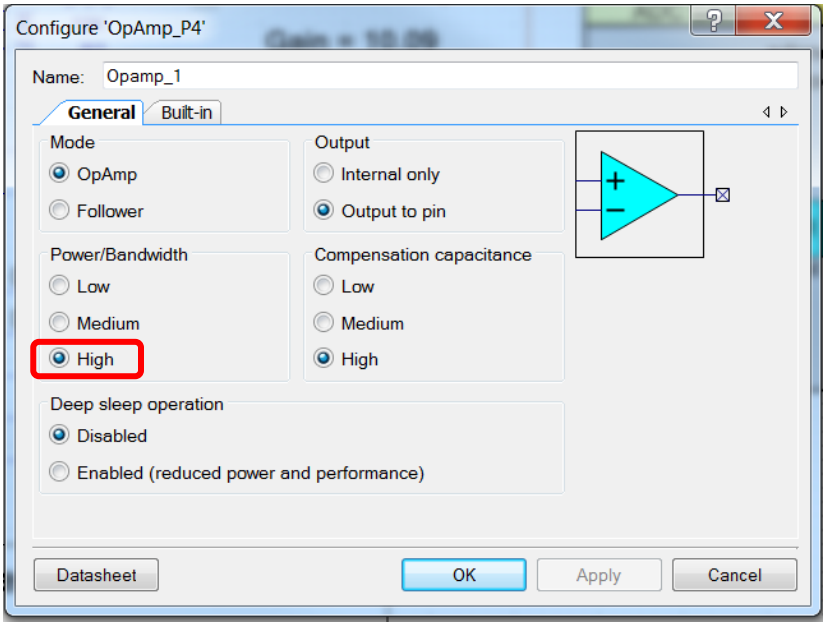

Figure 4 and Figure 5 show the ADC configuration. The ADC averages 256 consecutive samples to produce a final result. The low limit is set to 0x1F4 (in counts) which is equal to 250 mV, and the upper limit is set to 0x5DB which is equal to 750 mV. The ADC is configured as four channels, where channels 1 and 2 are differential channels and channels 3 and 4 are single-ended channels.

For CY8CKIT-041, the ADC Component has the **Vref select** parameter set to **Internal 1.024 volts** by default in the Component Customizer. The **Internal 1.024 volts** option is not supported for this kit, and the **Internal Vref** option should be set in the Component Customizer instead. Building the code example without changing the default **Vref select** parameter value for PSoC 4100S (CY8CKIT-041 kit) will cause a building error: “Error in component: ADC. The selected type of voltage reference is not supported for the current device type.”

Figure 4. ADC General Tab Configuration

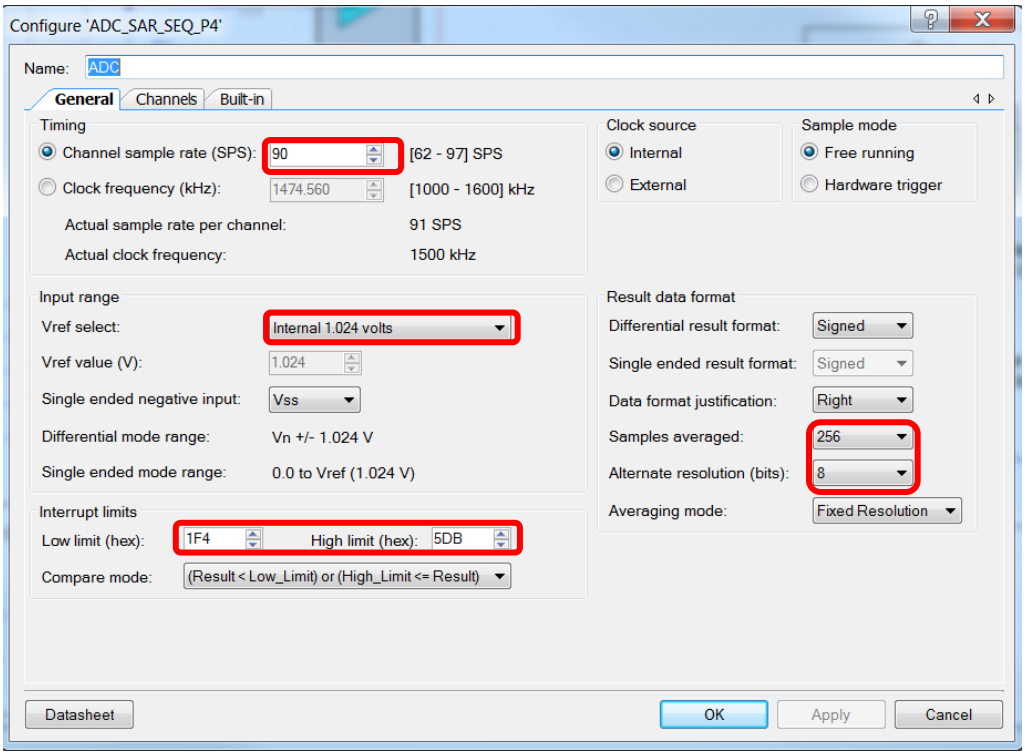

Figure 5. ADC Channels Tab Configuration

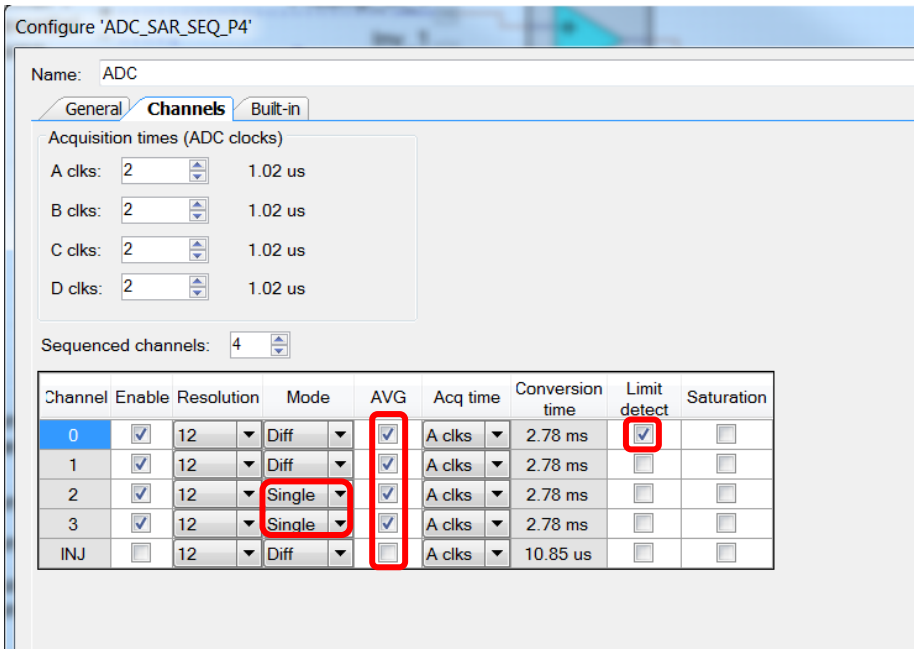

Operation

This example project communicates with a PC host using a UART. A terminal emulator program is required to be installed on the PC to communicate with PSoC 4. If you do not have a terminal emulator program installed, download and install any serial port communication program. Freeware such as PuTTY is available on the web.

Follow these steps to communicate with the PC host:

1. Make sure that the kit has been configured as instructed in the Kit Configuration and Pin Assignment section.
2. Connect the PSoC 4 Pioneer Kit to the PC using the USB cable.
3. Open the Device Manager program on your PC, find the COM port to which the PSoC 4 device is connected, and note the port number.
4. Open the terminal emulator program and select the COM port to which the PSoC 4 device is connected.
5. Configure the baud rate, parity, stop bits, or other information in the terminal emulator configuration window. These settings should match the configuration of the PSoC Creator UART Component in the project, as Figure 6 shows.

Figure 6. UART Configuration

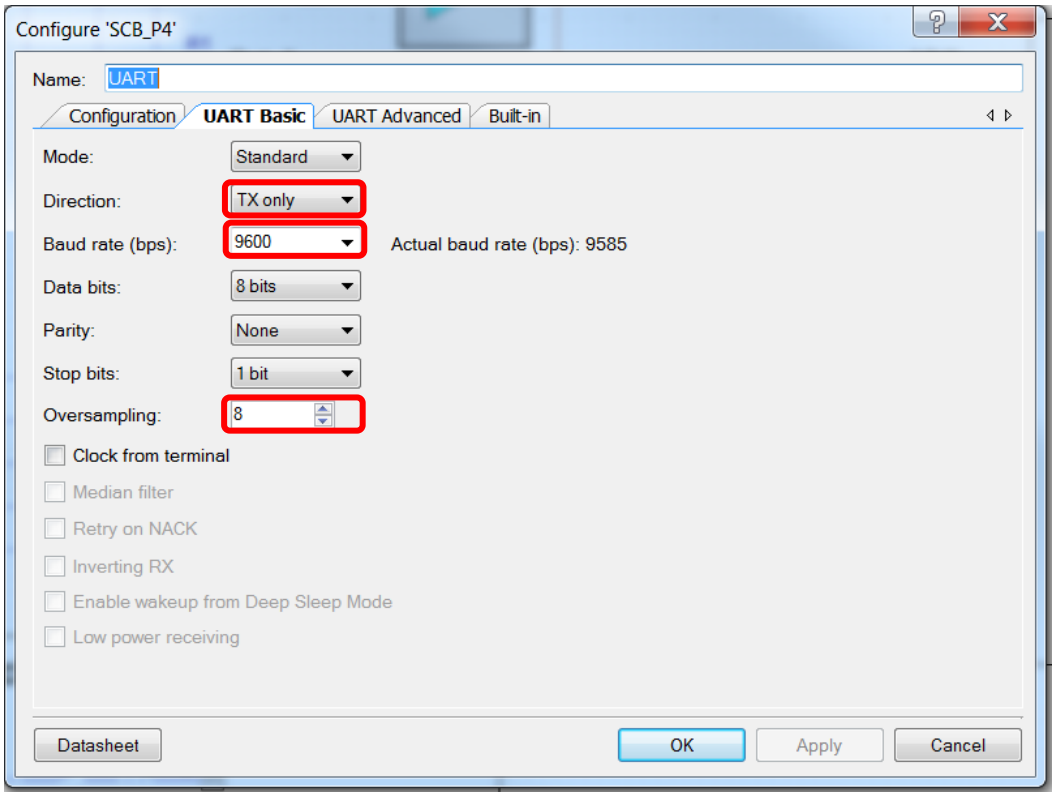

The terminal program should show the current channel and the input voltage (in millivolts) to the channel. An example of the result is shown in Figure 7. The result printed on the terminal will update whenever there is a change in the voltage at the ADC channel input. Also, note that the red LED will be ON when channel 1 is out of the 25 mV – 75 mV limit at the pins (preamp_1 and preamp_2).

Figure 7. Example of Result

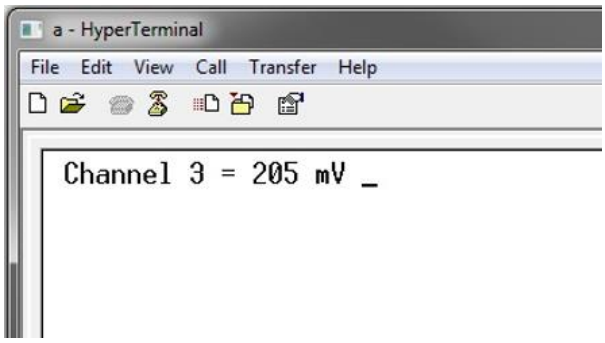

6. Press switch 2 (SW2) to change the channel being monitored.

Related Documents

Table 4 lists the relevant application notes, code examples, Component datasheets, and device and DVK documentation.

Table 4. Related Documents

Application Notes		
AN79953	Getting Started with PSoC 4	Describes PSoC 4 and shows how to build the attached code example
Code Examples		
CE97091	PSoC 4: Time-Stamped ADC Data Transfer Using DMA	Uses a DMA channel with two descriptors to implement a time-stamped ADC data transfer
CE95275	Sequencing SAR ADC and Die Temperature Sensor with PSoC 4	Demonstrates two channel measurements by the PSoC 4 sequencing SAR ADC, transferring results to the LCD and PWM using an ISR
CE97088	PSoC 4: ADC to PWM DMA Transfer	Demonstrates a peripheral-to-peripheral data transfer using PSoC 4 DMA. The DMA transfers the ADC result data to a PWM compare register.
CE97089	PSoC 4: ADC to Memory Buffer DMA Transfer	Sets up the PSoC 4 DMA controller to transfer data from the ADC result register to an array in SRAM
PSoC Creator Component Datasheets		
Sequencing Successive Approximation ADC	An SAR ADC block that can be configured and used in different operational modes	
Operational Amplifier	An opamp that supports internal only and output to pin output modes	
SCB	A multifunction block that supports I2C, SPI, UART, and EZI2C	
Pins	A Component that supports the connection of hardware resources to physical pins	
Device Documentation		
PSoC 4 Datasheets		
PSoC 4 Technical Reference Manuals		
Development Kit (DVK) Documentation		
PSoC 4 Kits		

Document History

Document Title: CE95272 – PSoC 4 SAR ADC and Differential Amplifier

Document Number: 001-95272

Revision	ECN	Orig. of Change	Submission Date	Description of Change
**	5522936	RLOS	01/30/2017	New code example
*A	6079874	MEH	02/21/2018	Few minor changes in text and updated links for datasheets, TRM, and kits. Updated project for PSoC Creator 4.2

Worldwide Sales and Design Support

Cypress maintains a worldwide network of offices, solution centers, manufacturer's representatives, and distributors. To find the office closest to you, visit us at Cypress Locations.

Products

Arm® Cortex® Microcontrollers	cypress.com/arm
Automotive	cypress.com/automotive
Clocks & Buffers	cypress.com/clocks
Interface	cypress.com/interface
Internet of Things	cypress.com/iot
Memory	cypress.com/memory
Microcontrollers	cypress.com/mcu
PSoC	cypress.com/psoc
Power Management ICs	cypress.com/pmic
Touch Sensing	cypress.com/touch
USB Controllers	cypress.com/usb
Wireless Connectivity	cypress.com/wireless

PSoC® Solutions

PSoC 1 | PSoC 3 | PSoC 4 | PSoC 5LP | PSoC 6 MCU

Cypress Developer Community

Forums | WICED IOT Forums | Projects | Videos | Blogs | Training | Components

Technical Support

cypress.com/support

All other trademarks or registered trademarks referenced herein are the property of their respective owners.

Cypress Semiconductor
198 Champion Court
San Jose, CA 95134-1709

© Cypress Semiconductor Corporation, 2017-2018. This document is the property of Cypress Semiconductor Corporation and its subsidiaries, including Spansion LLC ("Cypress"). This document, including any software or firmware included or referenced in this document ("Software"), is owned by Cypress under the intellectual property laws and treaties of the United States and other countries worldwide. Cypress reserves all rights under such laws and treaties and does not, except as specifically stated in this paragraph, grant any license under its patents, copyrights, trademarks, or other intellectual property rights. If the Software is not accompanied by a license agreement and you do not otherwise have a written agreement with Cypress governing the use of the Software, then Cypress hereby grants you a personal, non-exclusive, nontransferable license (without the right to sublicense) (1) under its copyright rights in the Software (a) for Software provided in source code form, to modify and reproduce the Software solely for use with Cypress hardware products, only internally within your organization, and (b) to distribute the Software in binary code form externally to end users (either directly or indirectly through resellers and distributors), solely for use on Cypress hardware product units, and (2) under those claims of Cypress's patents that are infringed by the Software (as provided by Cypress, unmodified) to make, use, distribute, and import the Software solely for use with Cypress hardware products. Any other use, reproduction, modification, translation, or compilation of the Software is prohibited.

TO THE EXTENT PERMITTED BY APPLICABLE LAW, CYPRESS MAKES NO WARRANTY OF ANY KIND, EXPRESS OR IMPLIED, WITH REGARD TO THIS DOCUMENT OR ANY SOFTWARE OR ACCOMPANYING HARDWARE, INCLUDING, BUT NOT LIMITED TO, THE IMPLIED WARRANTIES OF MERCHANTABILITY AND FITNESS FOR A PARTICULAR PURPOSE. No computing device can be absolutely secure. Therefore, despite security measures implemented in Cypress hardware or software products, Cypress does not assume any liability arising out of any security breach, such as unauthorized access to or use of a Cypress product. In addition, the products described in these materials may contain design defects or errors known as errata which may cause the product to deviate from published specifications. To the extent permitted by applicable law, Cypress reserves the right to make changes to this document without further notice. Cypress does not assume any liability arising out of the application or use of any product or circuit described in this document. Any information provided in this document, including any sample design information or programming code, is provided only for reference purposes. It is the responsibility of the user of this document to properly design, program, and test the functionality and safety of any application made of this information and any resulting product. Cypress products are not designed, intended, or authorized for use as critical components in systems designed or intended for the operation of weapons, weapons systems, nuclear installations, life-support devices or systems, other medical devices or systems (including resuscitation equipment and surgical implants), pollution control or hazardous substances management, or other uses where the failure of the device or system could cause personal injury, death, or property damage ("Unintended Uses"). A critical component is any component of a device or system whose failure to perform can be reasonably expected to cause the failure of the device or system, or to affect its safety or effectiveness. Cypress is not liable, in whole or in part, and you shall and hereby do release Cypress from any claim, damage, or other liability arising from or related to all Unintended Uses of Cypress products. You shall indemnify and hold Cypress harmless from and against all claims, costs, damages, and other liabilities, including claims for personal injury or death, arising from or related to any Unintended Uses of Cypress products.

Cypress, the Cypress logo, Spansion, the Spansion logo, and combinations thereof, WICED, PSoC, CapSense, EZ-USB, F-RAM, and Traveo are trademarks or registered trademarks of Cypress in the United States and other countries. For a more complete list of Cypress trademarks, visit cypress.com. Other names and brands may be claimed as property of their respective owners.