CE210514 - PSoC 3, PSoC 4, and PSoC 5LP Temperature Sensing with a Thermistor

Objective

This example demonstrates how to use PSoC® 3, PSoC 4, or PSoC 5LP to measure temperature using a thermistor.

Overview

This code example shows how to use a PSoC 3, PSoC 4, or PSoC 5LP device to measure temperature using a thermistor. Thermistors are sensors commonly used for temperature measurement. PSoC devices contain the necessary resources to accurately measure temperature using a thermistor. For more information on the theory behind thermistor temperature measurement, see AN66477.

Requirements

Tool: PSoC Creator™ 4.2 or newer

Programming Language: C (Arm® GCC 5.4.1, Arm MDK 5.22, DP8051 Keil 9.51)

Associated Parts: All PSoC 3, PSoC 4100, PSoC 4100 BLE, PSoC 4100 M, PSoC 4100 S, PSoC 4100 S Plus, PSoC 4200, PSoC 4200 BLE, PSoC 4200 L, PSoC 4200 M, All PSoC 5LP

Related Hardware: CY8CKIT-025, CY8CKIT-030, CY8CKIT-050, CY8CKIT-041-41XX, CY8CKIT-042, CY8CKIT-042-BLE, CY8CKIT-042-BLE-A, CY8CKIT-043, CY8CKIT-044, CY8CKIT-046.

Hardware Setup

For PSoC 3 and PSoC 5LP devices, follow these steps:

1. Plug CY8CKIT-025 into PORT E of either CY8CKIT-030 or CY8CKIT-050, as Figure 1 shows.

Figure 1. CY8CKIT-025 Plugged in to CY8CKIT-050

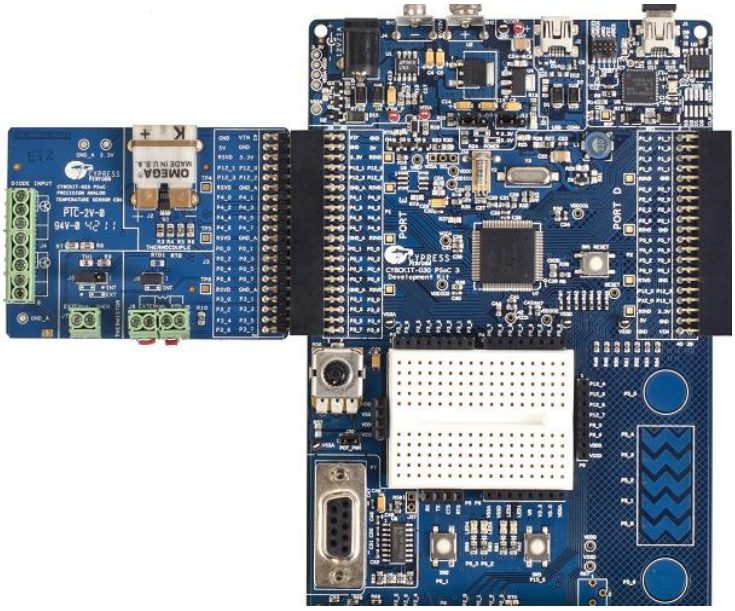

2. Set J5 on CY8CKIT-025 to INT.
3. Connect an LCD to the LCD Port on CY8CKIT-030 or CY8CKIT-050.
4. (Optional) Plug an external thermistor into J7, and set J5 to EXT on CY8CKIT-025.
5. (Optional) Connect a DB9 cable from CY8CKIT-030 or CY8CKIT-050 to a PC, and connect P3[7] to TX on the P5 connector of CY8CKIT-030 or 050 to connect the UART.

   Note: CY8CKIT-025 does not have to be used. An external thermistor and reference resistor can be used.

For PSoC 4 devices, follow these steps:

1. Connect a thermistor and reference resistor with the following connections to CY8CKIT-042 or a PSoC 4 kit, as Figure 2 shows.

Figure 2. External Connections for PSoC 4 Kit

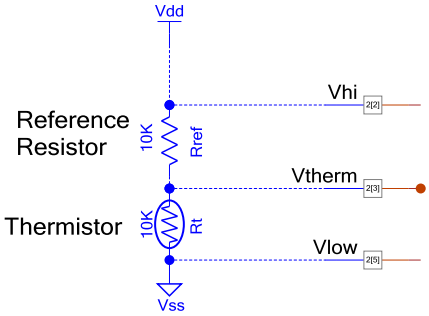

Vhi = P2[2], Vtherm = P2[3], Vlow = P2[5]

Note: On some PSoC 4 devices, the SAR MUX is not on Port 2, but another port such as Port 3. On those devices, change these pins to the corresponding pins on that port. Consult the device datasheet to determine the port the SAR mux is on.

2. Connect P0.5 on J4 of CY8CKIT-042 to P12.6 on J8 of CY8CKIT-042. This connects the UART.

   Note: This connection is specific to the CY8CKIT-042. For other devices the SCB might be on another pin. Furthermore, other kits have dedicated connections between a PSoC 4 SCB and the KitProg, removing the need for a flywire. To determine which pins connect directly between the PSoC 4 device and the KitProg look on the underside of the kit and find the connections printed on the silkscreen, or look in the kit user guide.

Software Setup

The code example supports a terminal emulator interface. A UART interface outputs the temperature value to a terminal program on a PC.

Serial Terminal

This document demonstrates using TeraTerm but any terminal emulator software may be used that is configurable to the standard UART settings shown in Figure 4. TeraTerm is open-source and downloadable directly from the author's website: https://en.osdn.jp/projects/ttssh2/.

1. Create new connection.

   Launch TeraTerm and select **File** > **New connection**. Select **Serial** as the connection type and do the following:

   a. **PSoC 4 Devices:** Choose the **KitProg USB-UART** communication port (COM), as Figure 3 shows. The actual COM port number will vary between computers and USB ports. If multiple communication ports are listed, it can be helpful to disconnect and reconnect the development kit's USB cable and look for the COM port that is disappears and reappears.

   b. **PSoC 3 or PSoC 5LP Devices:** Choose the COM port where you connected the DB9 cable.

Figure 3. New Connection Creation

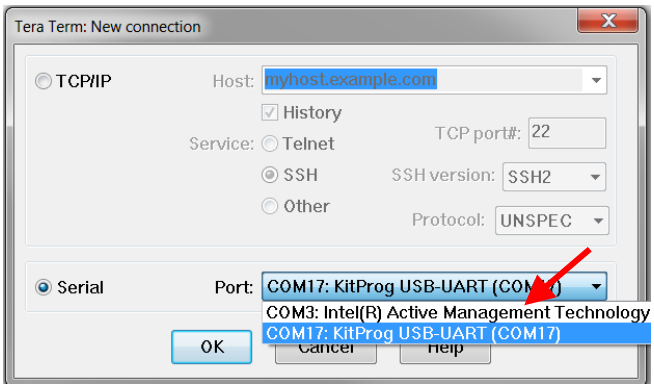

2. Set up serial port parameters.

   Open TeraTerm Serial port setup dialog (**Setup** > **Serial port…**). Only the **Baud rate:** should require changing to 115200, but it is good to also confirm that the other settings are as Figure 4 shows.

Figure 4. Terminal Emulator Setup Parameters

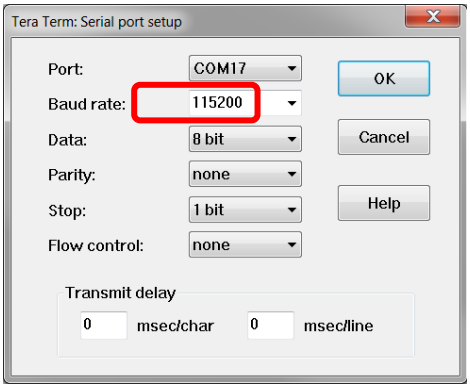

Math Library

The Thermistor Calculator component used in this design requires the math library to be linked into the design. That step is already done for you in the attached example.

If you are creating a new Creator project and using the Thermistor Calculator component right click on your project click on **Build Settings…** expand the complier by pressing the + button. The name of the compiler will depend on which compiler is used in the design; for Creator 4.2 it is **ARM GCC 5.4-2016-q2-update.** Click on **Linker**, in **Additional Libraries** add m, click **Apply**.

When using third party IDEs the math library will need to be added as well. The steps to do this are specific to each IDE and not described in this document. Consult help documentation for the IDE.

Operation

1. Load the workspace into PSoC Creator by opening `<Install_Directory>\CE210514\CE210514.cywrk`.
2. Select the project you wish to use. One project is for PSoC 4; the other is for PSoC 3 or PSoC 5LP. To select the project, right-click on it and select **set as active project**.
3. Build the example project by navigating to **Build** > **Build *<Project Name>*** in PSoC Creator.
4. Connect the kit to a PC through a USB cable. On-board KitProg devices are already connected to the programming pins of the on-board device.
5. Program the example to the device by navigating to **Debug** > **Program**.
6. Open the terminal program by following the instructions in the Software Setup section.
7. Power the device if not already powered.
8. Observe temperature display in the terminal program or on the display on the -030 or -050 kit LCD.

Design

AN66477 describes the theory of thermistor temperature measurement. Figure 5 shows the PSoC Creator schematic for PSoC 3 and PSoC 5LP thermistor temperature measurement.

Figure 5. Thermistor Measurement Circuit for PSoC 3 and PSoC 5LP

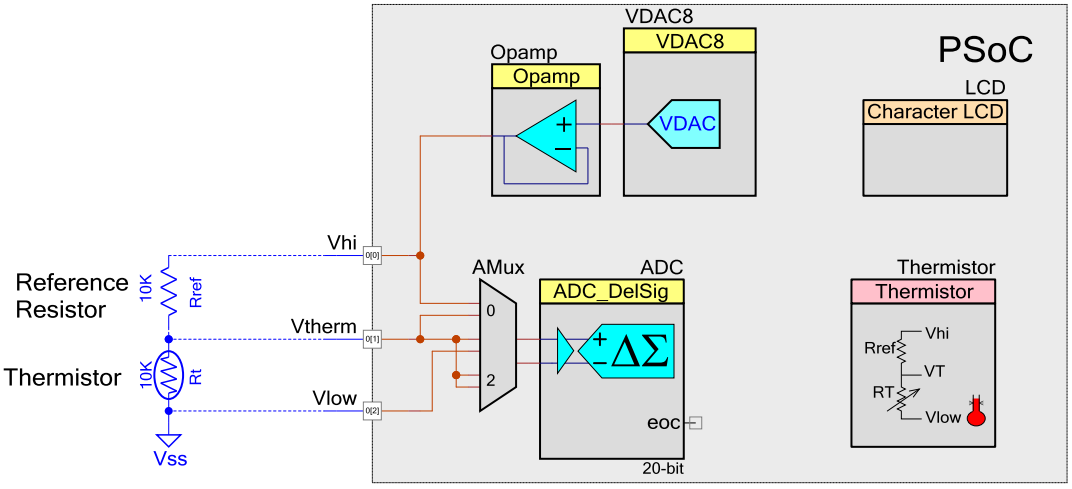

In this example, the voltages across the thermistor and a reference resistor are measured. Equation 1 is then used to calculate the resistance of the thermistor.

Equation 1 $$Rt = Rref * \frac{Vhi - Vtherm}{Vtherm - Vlow}$$

After the resistance has been determined, the Thermistor Calculator Component is used to calculate the temperature from the resistance value. The Thermistor Calculator Component uses the Steinhart-Hart equation to calculate the temperature. Equation 2 reproduces the equation. A, B, and C are the Steinhart-Hart coefficients which are calculated by the Thermistor Calculator Component.

Equation 2 $$\frac{1}{T_K} = A + B * ln(R_T) + C * (ln(R_T))^3$$

The temperature is printed out over UART or on the LCD.

Note: AMux input #2 is used for offset measurement. The inputs of the ADC are shorted together and the offset is measured, stored, and subtracted from all subsequent measurements. This technique is called correlated double sampling (CDS). For more information, consult AN66444, PSoC 3 and PSoC 5LP Correlated Double Sampling to Reduce Offset, Drift, and Low Frequency Noise.

Note: Each ADC reading is filtered via a software IIR filter. The theory behind the filter is documented in AN2099, PSoC Single-Pole Infinite Impulse Response (IIR) Filters.

Figure 6 shows the firmware flow for this project.

Figure 6: Basic Firmware Flowchart

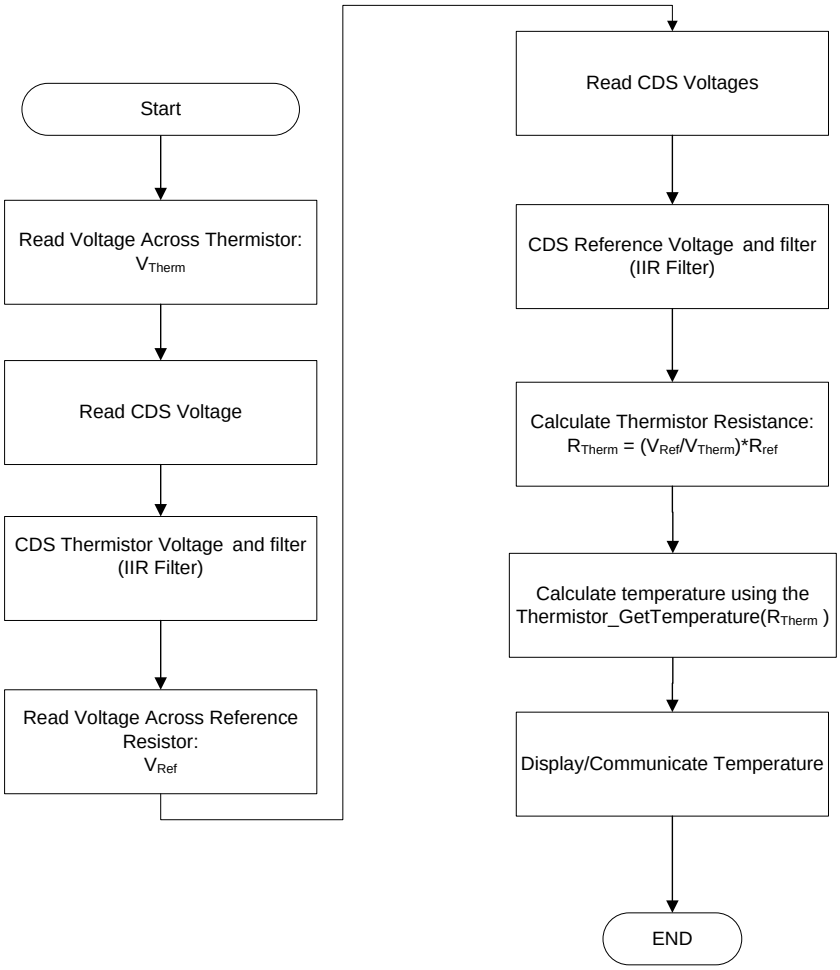

Figure 7 shows the schematic for PSoC 4 thermistor temperature measurement. The primary difference is that there is no DAC, and a SAR ADC is used.

Figure 7. Thermistor Measurement Circuit for PSoC 4

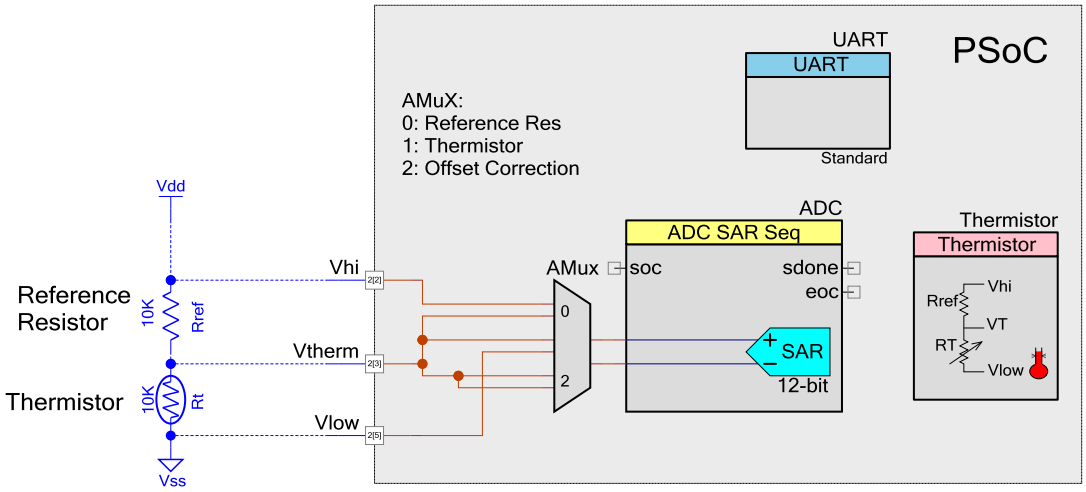

Note: The mux inside the ADC SAR Seq Component cannot be used because it does not allow two pins to be shorted together for the offset measurement. That is why an external software mux is used.

Design Considerations

With PSoC 3 and PSoC 5LP, Vhi must be connected to one of the dedicated Opamp output pins (P0[0], P0[1], P3[6], or P3[7]). If this is not done, a measurement error may be introduced; see Appendix A – Opamp Pin Selection for details.

Components

Table 1 and Table 2 list the PSoC Creator Components used in this example, as well as the hardware resources and parameter settings for each.

Table 1. List of PSoC Creator Components for PSoC 3 or PSoC 5LP

Component	Name	Hardware Resources	Non-default Parameter Settings
ADC_DelSig	ADC	1 DelSig ADC	Config1 Conversion Mode: 0 - Single Sample Resolution(bits): 20 Conversion rate (SPS): 182 Input Rage: +/- 2.048 V (-Input +/- 2*Vref) Buffer Mode: Level Shift Common Number of Configurations: 1
Voltage DAC (8-bit)	VDAC	1 ViDAC	Range: 0-4.080 V (16mV / bit) Speed: Slow Speed Value: 1600 mV
Opamp	Opamp	1 Opamp	Mode: Follower
Thermistor_Calculator	Thermistor	N/A	Reference Resistor 10000 Implementation: Equation Temperature Max: 125 °C – 531 Ω Temperature Mid : 25 °C – 10000 Ω

Component	Name	Hardware Resources	Non-default Parameter Settings
			Temperature Mid : -40 °C – 195652 Ω
UART	UART	~1 UDB	Configure: Mode: TX Only Bits per second: 115200
Character LCD	LCD	7 pins	N/A

Table 2. List of PSoC Creator Components for PSoC 4

Component	Name	Hardware Resources	Non-default Parameter Settings
Sequencing SAR ADC	ADC	1 Sequencing SAR ADC	Channels A clks: 19 Sequenced Channels: 1 Channel 0: AVG checked General Channel sample rate (sps): 1900 Vref Select: VDDA Samples averaged: 16
Thermistor_Calculator	Thermistor	N/A	Reference Resistor 10000 Implementation: LUT Temperature Max: 125 °C – 531 Ω Temperature Mid : 25 °C – 10000 Ω Temperature Mid : -40 °C – 195652 Ω Calculation Error Budget: 0.1
UART	UART	1 SCB	N/A

Design-Wide Resources

Table 3 shows the physical pin usage.

Table 3. Pin Locations

Pin Name	PSoC 3/ PSoC 5LP Location	PSoC 4 Location
LCD	P2[6:0]	N/A
Vhi	P0[0]	P2[2]
Vtherm	P0[1]	P2[3]
Vlow	P0[2]	P2[5]
TX	P3[7]	P0[5]

Change Vhi, Vtherm, and Vlow to match the SAR MUX port for PSoC 4 devices where the SAR mux is not on Port 2.

Related Documents

Table 4 lists all relevant application notes, code examples, knowledge base articles, device datasheets, and Component datasheets.

Table 4. Related Documents

Application Notes		
AN66477	PSoC 3, PSoC 4, and PSoC 5LP Temperature Measurement with a Thermistor	Theory behind thermistor temperature measurement.
Code Examples		
CE211321	Interfacing the PSoC Analog Coprocessor with a Temperature Sensor	Demonstrates how to implement an analog front end (AFE) for a thermistor using the PSoC Analog Coprocessor.
CE210528	PSoC 3 and PSoC 5LP Thermistor Calibration	Demonstrates how to calibrate out the interchangeability error of a Thermistor
PSoC Creator Component Datasheets		
Thermistor Calculator	Component Datasheet for Thermistor Calculator Component	
ADC DelSig	Component Datasheet for ADC DelSig Component.	
UART	Component datasheet for UDB based UART Component	
LCD	Component datasheet for LCD Component	
VDAC8	Component datasheet for VDAC8 Component	
Opamp	Component datasheet for Opamp Component	
ADC SAR Seq	Component datasheet for ADC SAR Sequencer Component	
UART (SCB)	Component datasheet for SCB based UART Component	
Device Documentation		
PSoC 3 Datasheets	PSoC 3 Technical Reference Manuals	
PSoC 4 Datasheets	PSoC 4 Technical Reference Manuals	
PSoC 5LP Datasheets	PSoC 5LP Technical Reference Manuals	
Development Kit (DVK) Documentation		
CY8CKIT-025 PSoC Precision Analog Temperature Sensor Expansion Board		
PSoC 3 and PSoC 5LP Kits		
PSoC 4 Kits		

Appendix A – Opamp Pin Selection

There are potential sources of error in the circuit shown in Figure 5. In AN66477, separate lines were shown for Vdd and Vhi. This provided a Kelvin connection at the top of the thermistor (or reference resistor). For a Kelvin connection, the source and sense lines are separate.

In Figure 5, the same line is used to sense Vhi and to drive the voltage Vhi. If the correct pins are chosen, this method works. Each opamp has a dedicated output pin (P0[0], P0[1], P3[6], or P3[7]). If the dedicated opamp output pin is chosen, and the ADC through the AMux connects to the same pin, there is an inherent Kelvin connection inside the PSoC pin.

However, if the dedicated opamp pin is not chosen, then there is no guarantee of a Kelvin connection. To solve this problem, separate the sense and source lines for Vhi, as Figure 8 shows.

Figure 8: Separated Sense and Source Lines for Thermistor Measurement

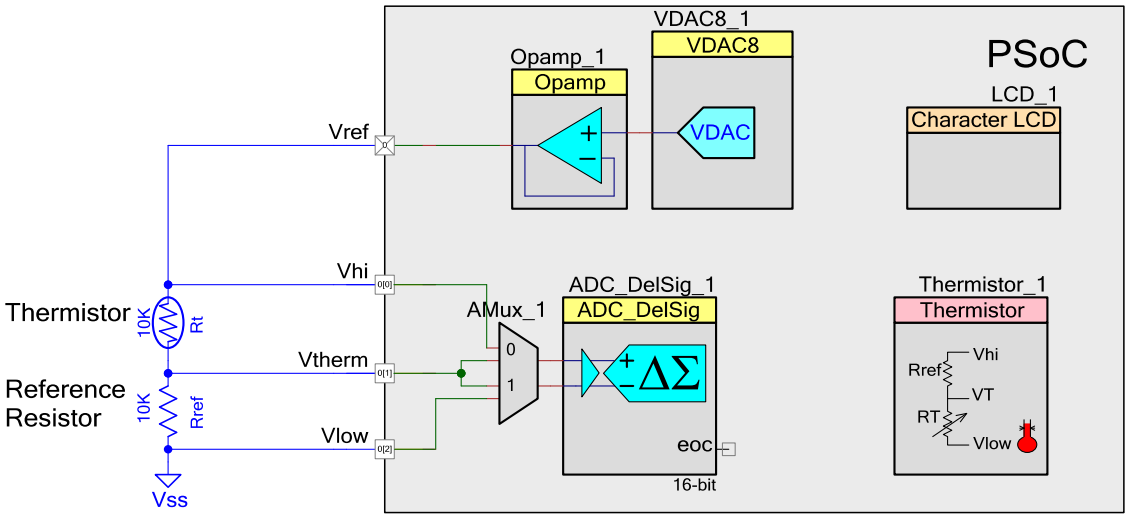

When using either CY8CKIT-030 or CY8CKIT-050 kits with the CY8CKIT-025 kit, the dedicated opamp pin is chosen and the Kelvin connection is present. For a more detailed discussion, see AN58304 – PSoC® 3 and PSoC 5LP – Pin Selection for Analog Designs.

Document History

Document Title: CE210514 - PSoC 3, PSoC 4, and PSoC 5LP Temperature Sensing with a Thermistor

Document Number: 002-10514

Revision	ECN	Orig. of Change	Submission Date	Description of Change
**	5077809	TDU	01/14/2016	New code example
*A	5741114	AESATP12	05/26/2017	Updated logo and copyright.
*B	6076852	TDU	02/02/2018	Updated code example to new template. Update obsolete components. Minor Typo graphical cleanup.

Worldwide Sales and Design Support

Cypress maintains a worldwide network of offices, solution centers, manufacturer's representatives, and distributors. To find the office closest to you, visit us at Cypress Locations.

Products

Arm® Cortex® Microcontrollers	cypress.com/arm
Automotive	cypress.com/automotive
Clocks & Buffers	cypress.com/clocks
Interface	cypress.com/interface
Internet of Things	cypress.com/iot
Memory	cypress.com/memory
Microcontrollers	cypress.com/mcu
PSoC	cypress.com/psoc
Power Management ICs	cypress.com/pmic
Touch Sensing	cypress.com/touch
USB Controllers	cypress.com/usb
Wireless Connectivity	cypress.com/wireless

PSoC® Solutions

PSoC 1 | PSoC 3 | PSoC 4 | PSoC 5LP | PSoC 6 MCU

Cypress Developer Community

Community Forums | Projects | Videos | Blogs | Training | Components

Technical Support

cypress.com/support

All other trademarks or registered trademarks referenced herein are the property of their respective owners.

Cypress Semiconductor
198 Champion Court
San Jose, CA 95134-1709

© Cypress Semiconductor Corporation, 2016-2018. This document is the property of Cypress Semiconductor Corporation and its subsidiaries, including Spansion LLC ("Cypress"). This document, including any software or firmware included or referenced in this document ("Software"), is owned by Cypress under the intellectual property laws and treaties of the United States and other countries worldwide. Cypress reserves all rights under such laws and treaties and does not, except as specifically stated in this paragraph, grant any license under its patents, copyrights, trademarks, or other intellectual property rights. If the Software is not accompanied by a license agreement and you do not otherwise have a written agreement with Cypress governing the use of the Software, then Cypress hereby grants you a personal, non-exclusive, nontransferable license (without the right to sublicense) (1) under its copyright rights in the Software (a) for Software provided in source code form, to modify and reproduce the Software solely for use with Cypress hardware products, only internally within your organization, and (b) to distribute the Software in binary code form externally to end users (either directly or indirectly through resellers and distributors), solely for use on Cypress hardware product units, and (2) under those claims of Cypress's patents that are infringed by the Software (as provided by Cypress, unmodified) to make, use, distribute, and import the Software solely for use with Cypress hardware products. Any other use, reproduction, modification, translation, or compilation of the Software is prohibited.

TO THE EXTENT PERMITTED BY APPLICABLE LAW, CYPRESS MAKES NO WARRANTY OF ANY KIND, EXPRESS OR IMPLIED, WITH REGARD TO THIS DOCUMENT OR ANY SOFTWARE OR ACCOMPANYING HARDWARE, INCLUDING, BUT NOT LIMITED TO, THE IMPLIED WARRANTIES OF MERCHANTABILITY AND FITNESS FOR A PARTICULAR PURPOSE. No computing device can be absolutely secure. Therefore, despite security measures implemented in Cypress hardware or software products, Cypress does not assume any liability arising out of any security breach, such as unauthorized access to or use of a Cypress product. In addition, the products described in these materials may contain design defects or errors known as errata which may cause the product to deviate from published specifications. To the extent permitted by applicable law, Cypress reserves the right to make changes to this document without further notice. Cypress does not assume any liability arising out of the application or use of any product or circuit described in this document. Any information provided in this document, including any sample design information or programming code, is provided only for reference purposes. It is the responsibility of the user of this document to properly design, program, and test the functionality and safety of any application made of this information and any resulting product. Cypress products are not designed, intended, or authorized for use as critical components in systems designed or intended for the operation of weapons, weapons systems, nuclear installations, life-support devices or systems, other medical devices or systems (including resuscitation equipment and surgical implants), pollution control or hazardous substances management, or other uses where the failure of the device or system could cause personal injury, death, or property damage ("Unintended Uses"). A critical component is any component of a device or system whose failure to perform can be reasonably expected to cause the failure of the device or system, or to affect its safety or effectiveness. Cypress is not liable, in whole or in part, and you shall and hereby do release Cypress from any claim, damage, or other liability arising from or related to all Unintended Uses of Cypress products. You shall indemnify and hold Cypress harmless from and against all claims, costs, damages, and other liabilities, including claims for personal injury or death, arising from or related to any Unintended Uses of Cypress products.

Cypress, the Cypress logo, Spansion, the Spansion logo, and combinations thereof, WICED, PSoC, CapSense, EZ-USB, F-RAM, and Traveo are trademarks or registered trademarks of Cypress in the United States and other countries. For a more complete list of Cypress trademarks, visit cypress.com. Other names and brands may be claimed as property of their respective owners.