CE210383 - PSoC® - Temperature Sensing with an RTD

Objective

This example demonstrates how to use PSoC® 3, PSoC 4, PSoC 5LP, or PSoC Analog Coprocessor devices to measure temperature using an RTD.

Overview

This code example shows how to use a PSoC 3, PSoC 4, PSoC 5LP, or PSoC Analog Coprocessor device to measure temperature using an RTD. RTDs are sensors commonly used for temperature measurement. PSoC devices contain the necessary resources to do a four-wire RTD measurement; this includes an IDAC, an ADC, and a CPU to perform calculations. For more information on the theory behind RTD measurement, see AN70698.

Requirements

Tool: PSoC Creator™ 3.3 CP1 or newer

Programming Language: C (ARM® GCC 4.9, ARM MDK, DP8051 Keil 9.51)

Associated Parts: All PSoC 3, PSoC 4, PSoC 5LP, and PSoC Analog Coprocessor parts

Related Hardware:CY8CKIT-001, CY8CKIT-050, CY8CKIT-030, CY8CKIT-042 (or any PSoC 4 Kit), CY8CKIT-048, CY8CKIT-025, CY8CKIT-019.

Design

This example measures temperature using a four-wire RTD that uses a reference resistor, as Figure 1 shows. The RTD and reference resistor are excited through an IDAC. The voltage across the RTD and the reference resistor are measured by the ADC. The two measurements are combined to determine the resistance of the RTD.

Equation 1 $R_{RTD} = \frac{V_{RTD}}{V_{REF}} * R_{Ref}$

Where

V_{RTD} is the voltage measured across the RTD.

V_{REF} is the voltage measured across the reference resistor.

R_{REF} is the resistance of the reference resistor. For this example, it is 100 Ω.

The resistance is then given to the RTD Calculator Component “RTD”, which calculates the temperature from the resistance value.

The temperature result is communicated over UART to a PC, or with KIT-030 and KIT-050 it is also displayed on a character LCD.

Figure 1. PSoC 3/PSoC 5LP RTD Measurement

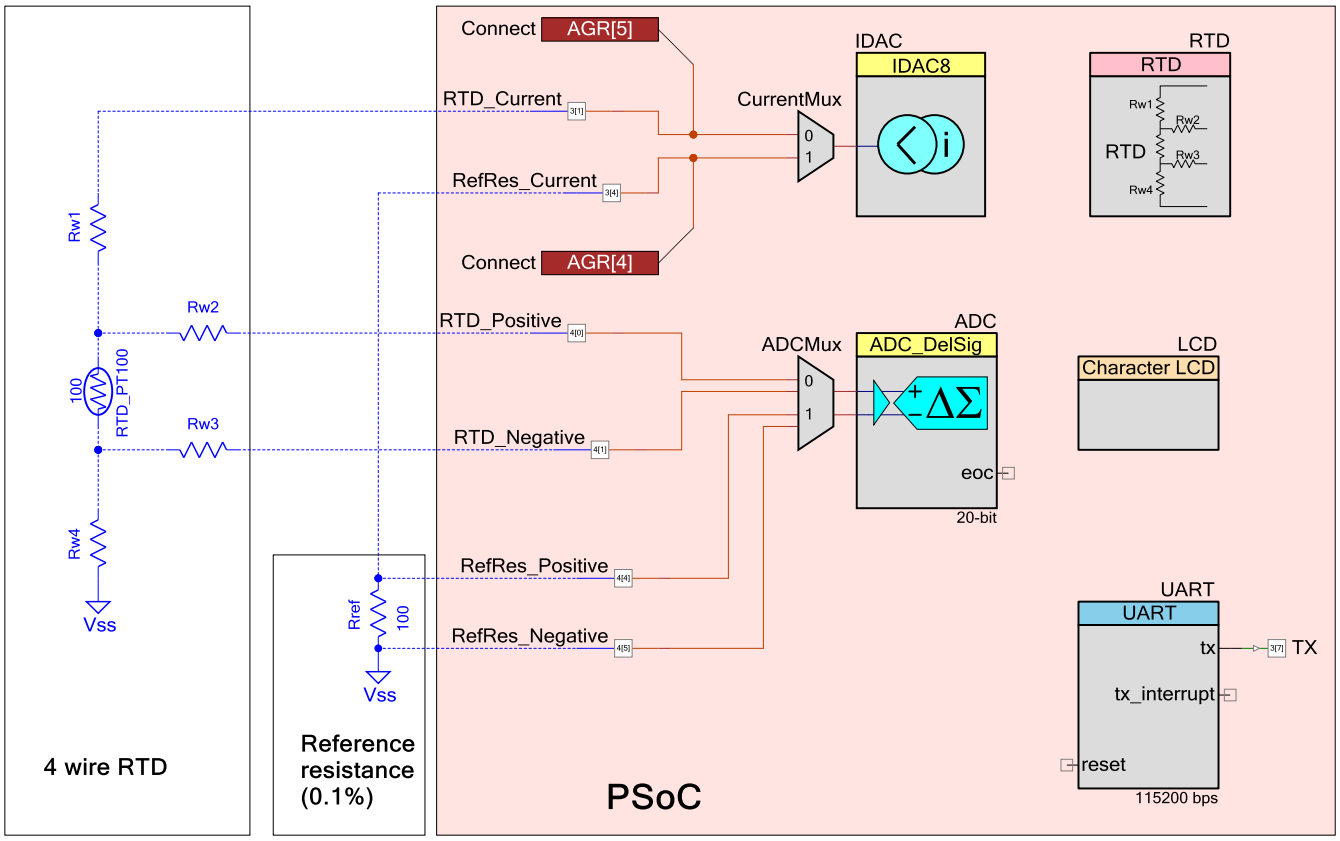

Note that this schematic applies only to PSoC 3 and PSoC 5LP. The schematic for the PSoC 4 project is very similar except for the ADC and IDAC used; in addition, it does not use the LCD. See Figure 2. The schematic for PSoC Analog Coprocessor is similar to PSoC 4 except for the IDAC and ADC used as shown in Figure 3.

Figure 2. PSoC 4 RTD Measurement

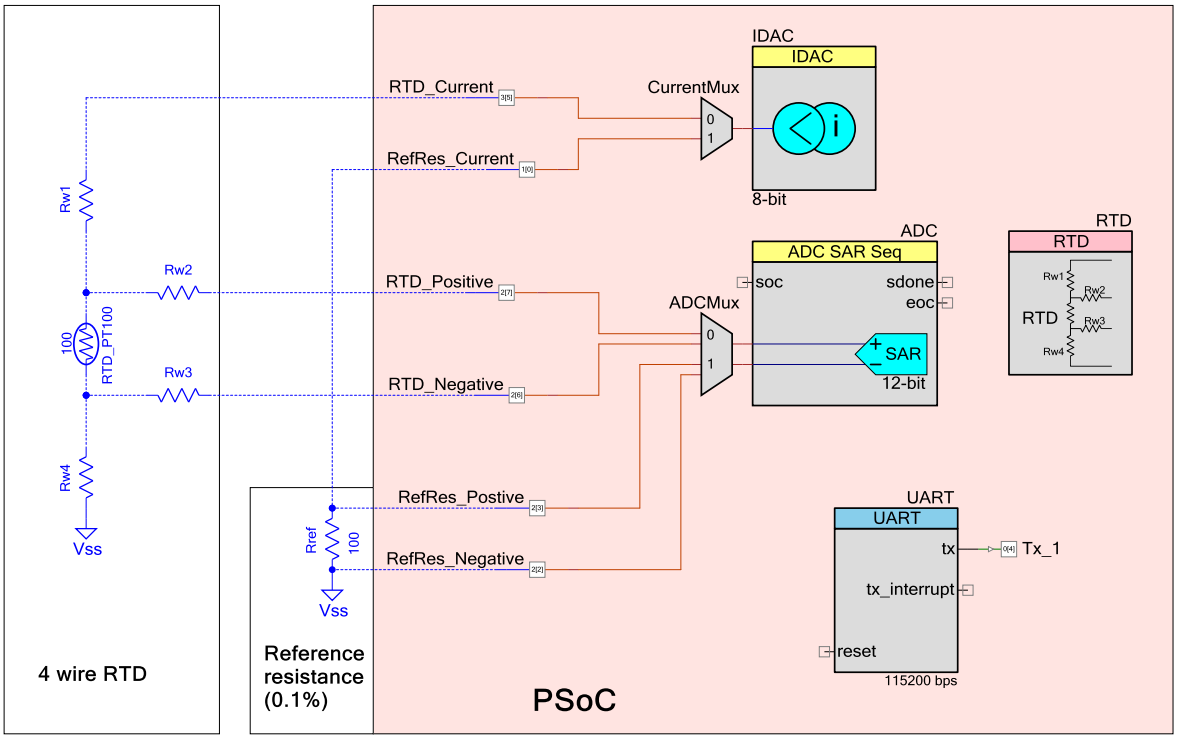

Figure 3. PSoC Analog Coprocessor RTD Temperature Measurement

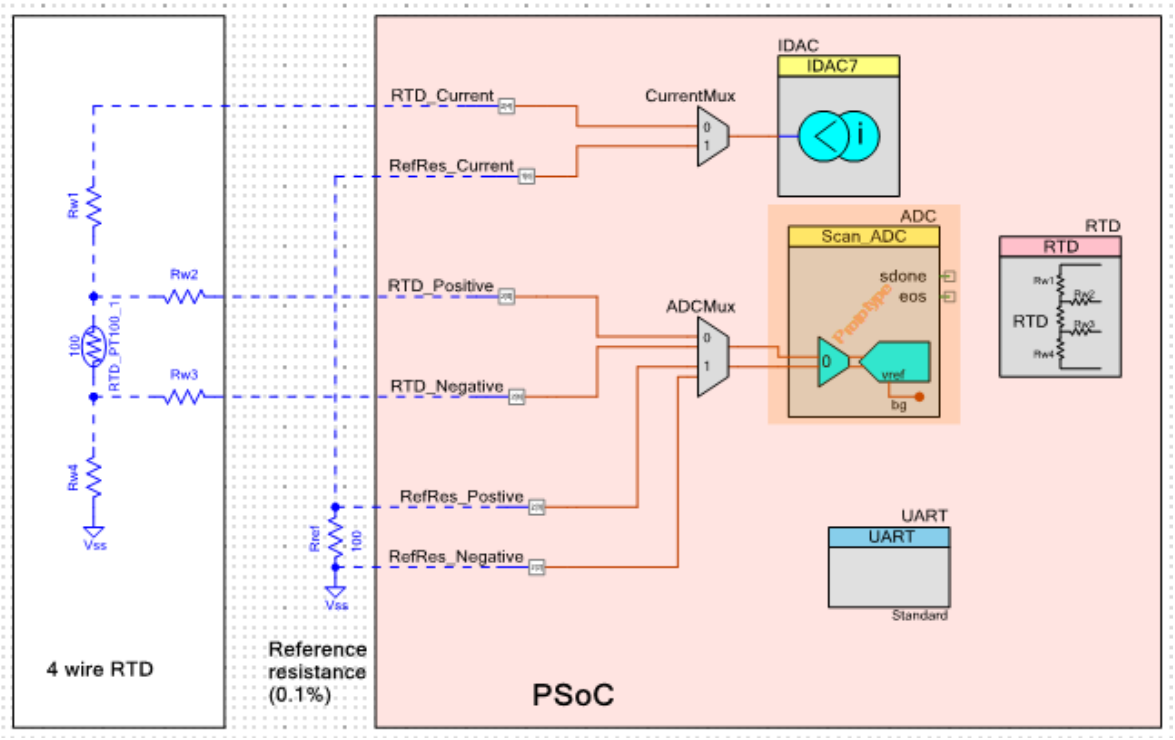

The following chart shows the firmware flow for this example.

Figure 4. RTD Measurement Firmware Flow

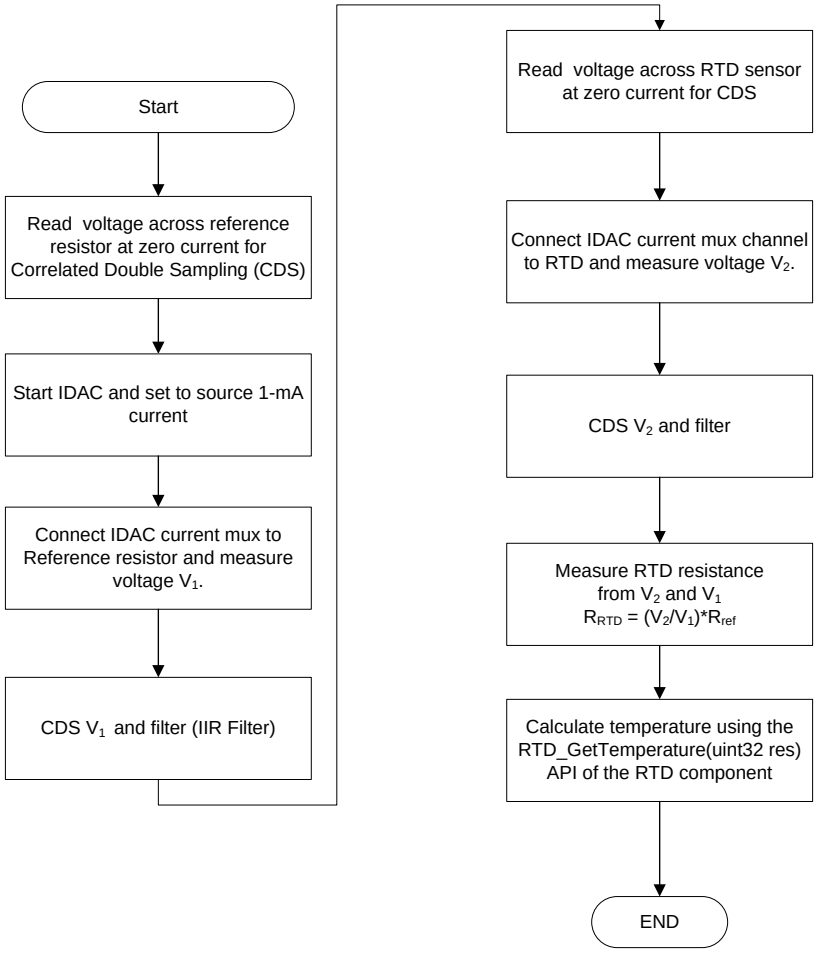

Design Considerations

Note: The schematic shown in Figure 1 does not match the schematic shown in Figure 5 of AN70698. The reason for this is that this code example uses KIT-025. KIT-025 does not have a dedicated reference resistor—it is shared with a diode temperature sensor. Because the reference resistance is not in series with the RTD, the current through the reference resistance can differ from the current through the RTD. If the currents through the reference resistance and RTD are not equal, you may get a temperature error. Manual analog routing is used to avoid a significant error. In your design, always use a reference resistor in series with the RTD.

Note: KIT-025 is not required for RTD temperature measurement. You can connect your own RTD and reference resistor directly to PSoC device pins. KIT-025 is meant to make the processes easier for demonstration purposes.

If you are designing your own board for RTD measurement, use a reference resistor in series with the RTD, as shown in AN70698.

Hardware Setup

For PSoC 3 and PSoC 5LP devices, follow these steps:

1. Plug CY8CKIT-025 into PORT E of either CY8CKIT-030 or CY8CKIT-050, as Figure 5 shows.

Figure 5. CY8CKIT-025 Plugged into CY8CKIT-050

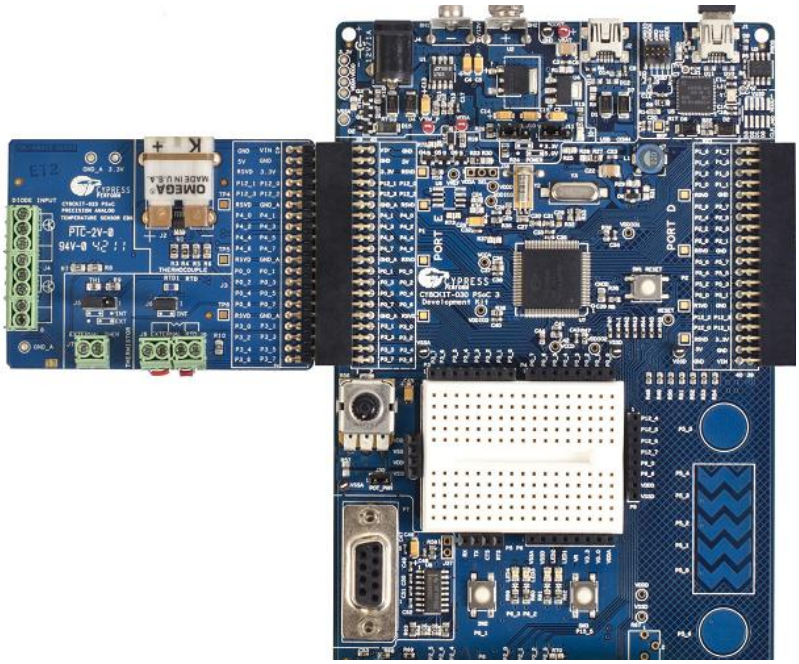

2. On KIT-025, ensure that there are wires shorting the terminals of J8 and J9, as Figure 6 shows.

Figure 6. Shorting J8 and J9 on KIT-025

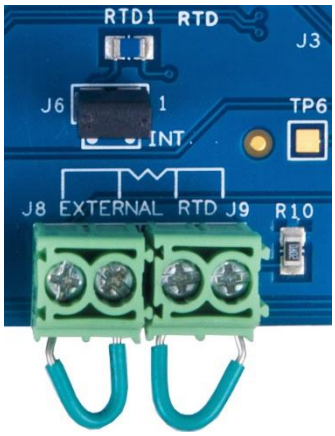

3. (Optional) Plug an external RTD into J8 and J9, and remove the J6 jumper on CY8CKIT-025.
4. Connect an LCD to the LCD Port on CY8CKIT-030 or CY8CKIT-050.
5. (Optional) connect a DB9 cable from CY8CKIT-030 or CY8CKIT-050 to a PC, and connect P3[7] to TX, to connect the UART.

For PSoC 4 and PSoC Analog Coprocessor devices, follow these steps:

1. Plug CY8CKIT-019 onto a CY8CKIT-042, or other Arduino-compatible PSoC 4/PSoC Analog Coprocessor kit.
2. Ensure that J5, J6, and J7 on CY8CKIT-019 are set for RTD.
3. Plug CY8CKIT-025 into CY8CKIT-019.

4. On KIT-025, ensure that there are wires shorting the terminals of J8 and J9 as Figure 6 shows.
5. (Optional) Plug an external RTD between J8 and J9, and remove the J6 jumper on CY8CKIT-025.
6. Connect P0.4 on J4 of CY8CKIT-019 to P12.6 on J8 of CY8CKIT-019. This connects the UART.

Software Setup

The code example supports a terminal emulator interface. A UART interface outputs the temperature value to a terminal program on a PC.

Serial Terminal

The documentation for setting up a terminal emulator for this example uses TeraTerm but any terminal emulator software may be used that is configurable to the standard UART settings shown in Figure 8. TeraTerm is open-source and downloadable directly from the author's website: https://en.osdn.jp/projects/ttssh2/.

1. Create new connection.

   Launch TeraTerm and select **File** > **New connection**. Select **Serial** as the connection type, and do the following:

   a. PSoC 4 Devices: Choose the **KitProg USB-UART** communication port (COM), as Figure 7 shows. The actual COM port number will vary between computers and USB ports. If multiple communication ports are listed, it can be helpful to disconnect and reconnect the development kit's USB cable and look for the COM port that is disappears and reappears.

   b. PSoC 3 or PSoC 5LP devices: Choose the COM port where you connected the DB9 cable.

Figure 7. New Connection Creation

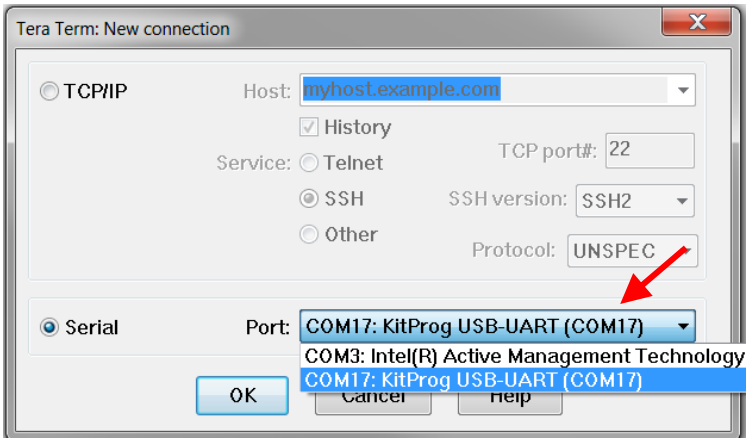

2. Set up serial port parameters.

   Open TeraTerm Serial port setup dialog (**Setup** > **Serial port…**). Only the **Baud rate:** should require changing to 115200, but it is good to also confirm that the other settings are as shown in Figure 8.

Figure 8. Terminal Emulator Setup Parameters

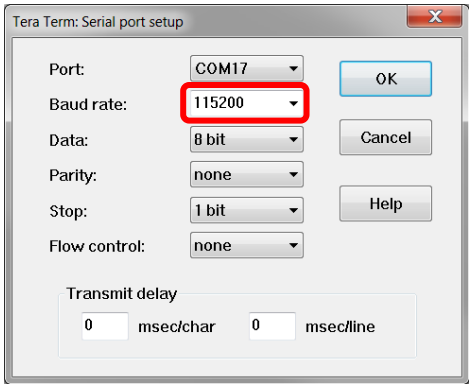

3. Serial output is displayed in the terminal window as shown in Figure 9.

Figure 9. Serial Window Output

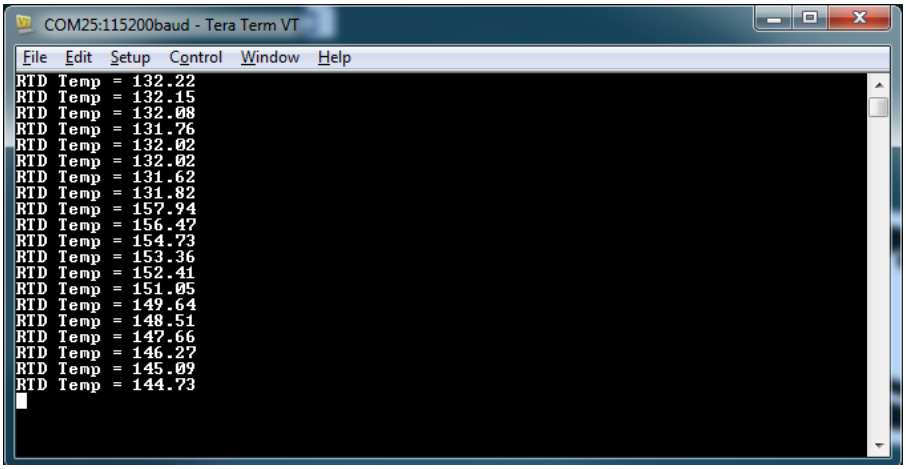

Components Used

Table 1 lists the PSoC Creator Components used in this example, as well as the hardware resources used by each.

Table 1. List of PSoC Creator Components for PSoC 3 or PSoC 5LP

Component	Name	Hardware Resources	Non-default Parameter Settings
ADC_DelSig [v3.0]	ADC	1 DelSig ADC Block	Config1 Resolution(bits): 20 Conversion rate (SPS): 61 Input Rage: +/- 0.512 V (-Input +/- Vref/2) Buffer Mode: Level Shift Common Number of Configurations: 1
Current DAC (8-bit) [v2.0]	IDAC	1 ViDAC	Polarity: Source Speed: Low Speed Range: 0 – 2.04 mA Value: 1000 µA

Component	Name	Hardware Resources	Non-default Parameter Settings
RTD_Calculator [v1.20]	RTD	N/A	Temperature Min: -200 Temperature Max: -850 Calculation Error Budget: 0.01
UART [v2.50]	UART	UDBs	Configure: Mode: TX Only Bits per second: 115200
Character LCD [v2.10]	LCD	7 Pins	N/A

Table 2. List of PSoC Creator Components for PSoC 4 and PSoC Analog Coprocessor

Component	Name	Hardware Resources	Non-default Parameter Settings
Sequencing SAR ADC [v2.20] (PSoC 4)	ADC	1 Sequencing SAR ADC	Channels A clks: 1023 Sequenced Channels: 1 Channel 0: AVG checked General Channel sample rate (sps): 61 Vref Select: Internal 1.024 volts Samples averaged: 16
Scan ADC (PSoC Analog Coprocessor)	ADC	1 Scan ADC	Channels Sequenced Channels: 1 Channel 0: AVG checked General Channel sample rate (sps): 200000 Vref Select: system bandgap Samples averaged: 32
Current DAC (8-bit) [v1.10] (PSoC 4)	IDAC	1 IDAC	Polarity: Source Resolution: 8-bit Range: 0 – 612 µA Value: 612 µA
Current DAC (7-bit) (PSoC Analog Coprocessor)	IDAC	1 IDAC	Polarity: Source Resolution: 7-bit Range: 0 – 609.6 µA Value: 609.6 µA
RTD_Calculator [v1.20] (PSoC 4 and PSoC Analog Coprocessor)	RTD	N/A	Temperature Min: -200 Temperature Max: -850 Calculation Error Budget: 0.01
UART [v2.50] (PSoC 4 and PSoC Analog Coprocessor)	UART	UDBs	Configure: Mode: TX Only Bits per second: 115200

Design-Wide Resources

Pin locations for PSoC 3, PSoC 5LP, PSoC 4, and PSoC Analog Coprocessor

Table 3. Pin locations for PSoC 3, PSoC 5LP, PSoC 4, and PSoC Analog Coprocessor

Pin Name	PSoC 3/ PSoC 5LP Pin Location	PSoC 4/PSoC Analog Coprocessor Pin Location
LCD	P2[6:0]	-
RefRes_Current	P3[4]	P1[0]
RefRes_Positive	P4[4]	P2[3]
Ref_Res_Negative	P4[5]	P2[2]
RTD_Current	P3[1]	P2[4]
RTD_Positive	P4[0]	P2[5]
RTD_Negative	P4[1]	P2[6]
TX/ UART: tx	P3[7]	P0[5]
UART: rx	-	P0[4]
ADC : Bypass	-	P2[7]

Operation

1. Load the workspace into PSoC Creator by opening `<Install_Directory>\CE210383\CE210383.cywrk`.
2. Select the project you wish to use. One project is for PSoC 4/PSoC Analog Coprocessor, the other is for PSoC 3/PSoC 5LP. To select the project, right-click on it and select **set as active project**.

   Note:

   i. PSoC 3/PSoC 5LP project by default uses PSoC 5LP. It can be changed to a PSoC 3 device by right-clicking the project and selecting **device selector**.

   ii. The project for PSoC 4 and PSoC Analog Coprocessor contains two pages of schematic with one of the pages always disabled depending on the device used. By default, the project has the schematic for PSoC 4 enabled and PSoC Analog Coprocessor disabled.

   iii. It is recommended to follow these steps in sequence to use the project for PSoC Analog Coprocessor

      a. Right-click on the schematic name tab **RTD_PSoC4** at the bottom of the schematic and choose **Disable Page.**

      b. Under the workspace explorer, right-click on the project **CE210383_PSoC4_PAC_RTD** and click on **Set As Active Project.**

      c. Next, right-click on the schematic name tab **RTD_PSoC Analog Coprocessor** and choose **Enable Page.**
3. Build the example project by navigating to **Build** > **Build *<Project Name>*** in PSoC Creator.
4. Connect the device/board to a programmer connected to a PC. On-board KitProg devices are already connected to the programming pins of the on-board device.
5. Program the example to the device by navigating to **Debug** > **Program**.
6. Power the device if not already powered.
7. Open the terminal program following instructions in the Software Setup section.
8. Observe temperature display in the terminal program or on the LCD display of the -030 or -050 kit.

Related Documents

Table 4 lists all relevant application notes, code examples, knowledge base articles, device datasheets, and Component datasheets.

Table 4. Related Documents

Application Notes		
AN70698	PSoC - Temperature Measurement with an RTD	Theory behind RTD temperature measurement.
Code Examples		
CE210435	PSoC 3, and PSoC 5LP Broken RTD Reconfiguration	Demonstrates how to detect a broken wire on an RTD connection and reconfigure the Analog front end to keep measuring the RTD
CE210434	PSoC 3, and PSoC 5LP RTD Calibration	Demonstrates how to calibrate out the interchangeability error of an RTD
PSoC Creator Component Datasheets		
RTD Calculator	Component datasheet for RTD Calculator Component	
ADC DelSig	Component datasheet for ADC DelSig Component	
Device Documentation		
PSoC 3 Datasheets	PSoC 3 Technical Reference Manuals	
PSoC 4 Datasheet	PSoC 4 and PSoC Analog Coprocessor Technical Reference Manuals	
PSoC Analog Coprocessor Datasheet		
PSoC 5LP Datasheets	PSoC 5LP Technical Reference Manuals	
Development Kit (DVK) Documentation		
CY8CKIT-025 PSoC Precision Analog Temperature Sensor Expansion Board		
PSoC 3 and PSoC 5LP Kits		
PSoC 4 Kits		
PSoC Analog Coprocessor Kit		

Document History

Document Title: CE210383 - PSoC® - Temperature Sensing with an RTD

Document Number: 002-10383

Revision	ECN	Orig. of Change	Submission Date	Description of Change
**	5077550	TDU	01/14/2016	New spec
*A	5724160	JSLN	05/02/2017	Added support for PSoC Analog Coprocessor Updated template

Worldwide Sales and Design Support

Cypress maintains a worldwide network of offices, solution centers, manufacturer's representatives, and distributors. To find the office closest to you, visit us at Cypress Locations.

Products

ARM® Cortex® Microcontrollers	cypress.com/arm
Automotive	cypress.com/automotive
Clocks & Buffers	cypress.com/clocks
Interface	cypress.com/interface
Internet of Things	cypress.com/iot
Memory	cypress.com/memory
Microcontrollers	cypress.com/mcu
PSoC	cypress.com/psoc
Power Management ICs	cypress.com/pmic
Touch Sensing	cypress.com/touch
USB Controllers	cypress.com/usb
Wireless Connectivity	cypress.com/wireless

PSoC® Solutions

PSoC 1 | PSoC 3 | PSoC 4 | PSoC 5LP

Cypress Developer Community

Forums | WICED IOT Forums | Projects | Videos | Blogs | Training | Components

Technical Support

cypress.com/support

All other trademarks or registered trademarks referenced herein are the property of their respective owners.

Cypress Semiconductor
198 Champion Court
San Jose, CA 95134-1709

© Cypress Semiconductor Corporation, 2016-2017. This document is the property of Cypress Semiconductor Corporation and its subsidiaries, including Spansion LLC ("Cypress"). This document, including any software or firmware included or referenced in this document ("Software"), is owned by Cypress under the intellectual property laws and treaties of the United States and other countries worldwide. Cypress reserves all rights under such laws and treaties and does not, except as specifically stated in this paragraph, grant any license under its patents, copyrights, trademarks, or other intellectual property rights. If the Software is not accompanied by a license agreement and you do not otherwise have a written agreement with Cypress governing the use of the Software, then Cypress hereby grants you a personal, non-exclusive, nontransferable license (without the right to sublicense) (1) under its copyright rights in the Software (a) for Software provided in source code form, to modify and reproduce the Software solely for use with Cypress hardware products, only internally within your organization, and (b) to distribute the Software in binary code form externally to end users (either directly or indirectly through resellers and distributors), solely for use on Cypress hardware product units, and (2) under those claims of Cypress's patents that are infringed by the Software (as provided by Cypress, unmodified) to make, use, distribute, and import the Software solely for use with Cypress hardware products. Any other use, reproduction, modification, translation, or compilation of the Software is prohibited.

TO THE EXTENT PERMITTED BY APPLICABLE LAW, CYPRESS MAKES NO WARRANTY OF ANY KIND, EXPRESS OR IMPLIED, WITH REGARD TO THIS DOCUMENT OR ANY SOFTWARE OR ACCOMPANYING HARDWARE, INCLUDING, BUT NOT LIMITED TO, THE IMPLIED WARRANTIES OF MERCHANTABILITY AND FITNESS FOR A PARTICULAR PURPOSE. To the extent permitted by applicable law, Cypress reserves the right to make changes to this document without further notice. Cypress does not assume any liability arising out of the application or use of any product or circuit described in this document. Any information provided in this document, including any sample design information or programming code, is provided only for reference purposes. It is the responsibility of the user of this document to properly design, program, and test the functionality and safety of any application made of this information and any resulting product. Cypress products are not designed, intended, or authorized for use as critical components in systems designed or intended for the operation of weapons, weapons systems, nuclear installations, life-support devices or systems, other medical devices or systems (including resuscitation equipment and surgical implants), pollution control or hazardous substances management, or other uses where the failure of the device or system could cause personal injury, death, or property damage ("Unintended Uses"). A critical component is any component of a device or system whose failure to perform can be reasonably expected to cause the failure of the device or system, or to affect its safety or effectiveness. Cypress is not liable, in whole or in part, and you shall and hereby do release Cypress from any claim, damage, or other liability arising from or related to all Unintended Uses of Cypress products. You shall indemnify and hold Cypress harmless from and against all claims, costs, damages, and other liabilities, including claims for personal injury or death, arising from or related to any Unintended Uses of Cypress products.

Cypress, the Cypress logo, Spansion, the Spansion logo, and combinations thereof, WICED, PSoC, CapSense, EZ-USB, F-RAM, and Traveo are trademarks or registered trademarks of Cypress in the United States and other countries. For a more complete list of Cypress trademarks, visit cypress.com. Other names and brands may be claimed as property of their respective owners.