CE209974 – Breathing LED with Smart I/O™

Objective

This example demonstrates the flexibility of PSoC® 4 Smart I/O, by implementing a breathing LED effect exclusively in hardware, with no CPU usage beyond initialization.

Overview

This example uses a PWM and a Smart I/O to make an LED gradually cycle through increasing and decreasing brightness. There is no CPU usage beyond PWM initialization. This example also shows how the Smart I/O can be used to route the same signal through multiple I/O pins on the same port.

Requirements

Tool: PSoC Creator 4.1

Programming Language: C (GCC 4.9, ARM MDK)

Associated Parts: PSoC 4000S, PSoC 4100S, PSoC Analog Coprocessor, PSoC 4200L

Related Hardware: CY8CKIT-041, CY8CKIT-048, CY8CKIT-046

Design

This design consists of a PWM Component and a Smart I/O Component, both of which create square waves. The square waves have slightly different frequencies. They are routed through an exclusive-OR (XOR) gate within the Smart I/O Component, yielding a signal with a gradually changing duty cycle. The rate of change is proportional to the difference between the PWM output frequencies.

The signal is then output to pin4 and pin6 on the port. Driving LEDs with this signal results in a “breathing” effect, where the LEDs gradually get brighter and dimmer. Additionally, pin6 inverts the pin4 signal and thereby creates a breathing effect that is of opposite polarity to the signal on pin4.

Figure 1 shows a schematic overview of the design.

Figure 1. Breathing LED with Smart I/O Schematic

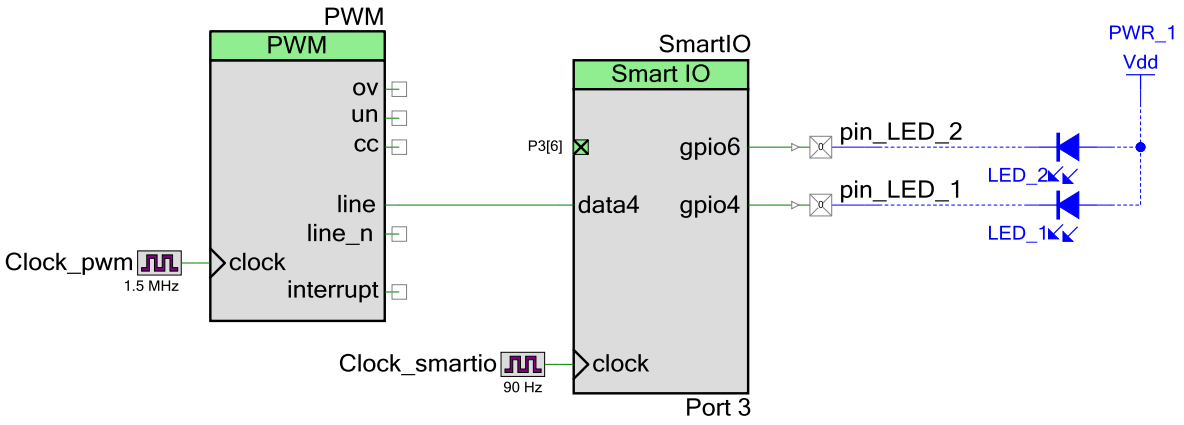

The PWM is driven by a 1.5-MHz clock with a period of 65535 and a compare value of 32768. This gives a 50% duty cycle square wave with a period of roughly 43.7 ms.

The Smart I/O Component is clocked at 90 Hz using a divided clock sourced from the high-frequency clock (HFCLK). The Component implements several logic functions using its lookup tables (LUTs). The gpio4 and gpio6 terminals are connected to LEDs external to the chip, where specific LED connections differ depending on the kit that is used.

Figure 2 shows the Smart I/O LUT configuration. The Smart I/O Component implements a divide-by-four circuit from the 90-Hz clock. Therefore LUT3 produces a signal with a period of roughly 44.4 ms. The signal is XORed with the PWM output using LUT4. The output is sent out to gpio4. The same signal is replicated and inverted using LUT6 (not shown), before driving it out to gpio6. This creates a breathing effect that is of opposite polarity to the signal driven on gpio4.

Figure 2. LUT configuration and timing diagram

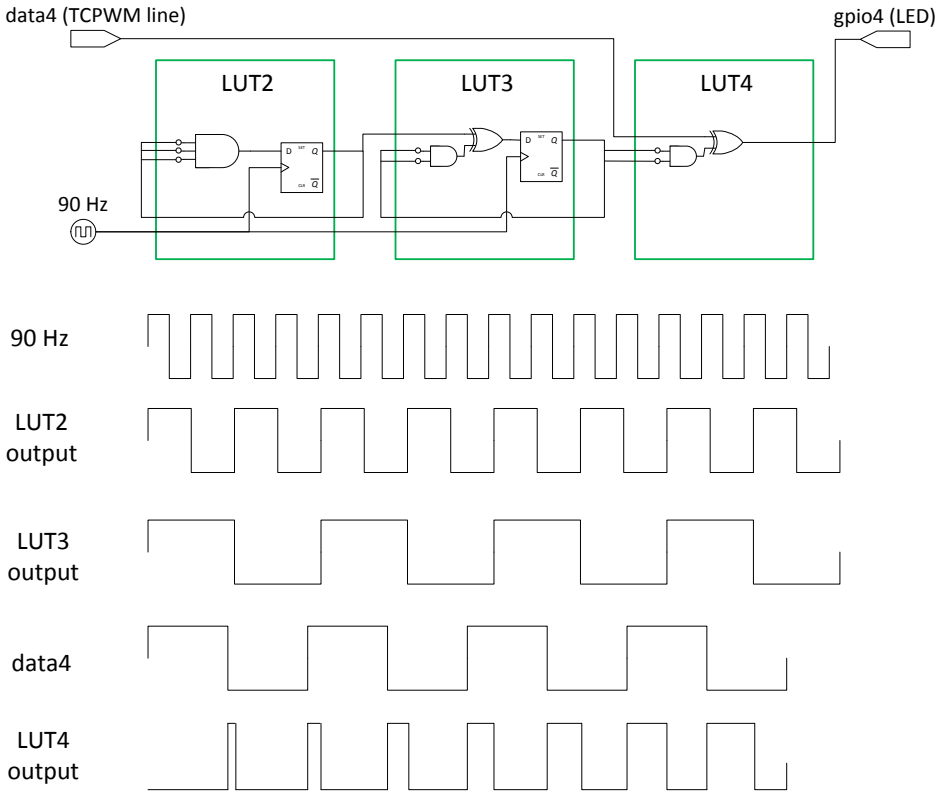

The firmware is implemented in *main.c* and performs only the Component initialization functions:

1. Starts the Smart I/O Component.
2. Starts the PWM.

Design Considerations

This design can be extended in a number of ways, depending on the device resource availability:

- Connect a kit button through an input pin to the PWM's enable terminals. This allows hardware control of whether or not the LED breathes, with no CPU usage.
- Add an analog-to-digital converter (ADC), with a kit potentiometer as an analog input. Then use CPU firmware to change the period of the PWM or the 90-Hz clock based on the potentiometer position. This allows potentiometer-based control of the breathing rate.
- Configure other LUTs to either replicate the PWM signal to other pins on the port or perform additional logical operations to create more PWMs.
- Use a kit button to gate an LUT output to effectively gate the breathing LEDs entirely in hardware.

This code example is designed for the specified ports on the stated devices. The design is portable to other PSoC 4 devices with Smart I/O, but it may require LUT reconfiguration due to the close relationship between the device port and the Component.

Hardware Setup

Depending on the kit used, follow the appropriate instructions.

CY8CKIT-041

No changes required. The pin_LED_1 and pin_LED_2 are connected to red and blue LEDs respectively.

CY8CKIT-048

To connect the Smart I/O pins to red and blue LEDs on the kit, manually connect the following pins using wires:

P0[4] to P1[4].

P0[6] to P1[6].

CY8CKIT-046

To connect the Smart I/O pins to red and blue LEDs on the kit, manually connect the following pins using wires:

P11[4] to P5[2].

P11[6] to 5[4].

Software Setup

The Smart I/O Component is a port-wide resource; you must define its port before it can be used. Follow these steps to configure your design.

CY8CKIT-041

Default Smart I/O port is Port 3. No changes necessary.

CY8CKIT-048

1. Open the Smart I/O Configure dialog in the design schematic, and define the Port parameter to be 0.
2. Click **OK** to close the dialog.
3. Rebuild the PSoC Creator project.

CY8CKIT-046

1. Open the Smart I/O Configure dialog in the design schematic, and define the Port parameter to be 11.
2. Click OK to close the dialog.
3. Rebuild the PSoC Creator project.

PSoC Creator Components

Table 1 lists the PSoC Creator Components used in this example, as well as the hardware resources used.

Table 1. PSoC Creator Components/Hardware Resources

Component	Hardware Resources
PWM	1 TCPWM
SmartIO	1 PRGIO
pin_LED1, pin_LED2	2 pins
Clock_pwm, Clock_smartio	2 Clock dividers

Parameter Settings

The TCPWM Component is configured as a PWM with a period of 65535 and a compare value of 32768, and is set to generate an interrupt at terminal count.

The Smart I/O Component is configured to operate on “Divided Clock (Active)” clock, as Figure 3 shows. It accepts the “line” output from the TCPWM as its input through the data4 terminal.

LUT2, LUT3, and LUT4 implement the breathing effect PWM signal and are chained as shown in Figure 2 on page 2. LUT6 is configured to replicate the LUT4 signal. The LUT configurations to implement these are shown in Figure 4 on page 5.

Figure 3. SmartIO Routing Configuration

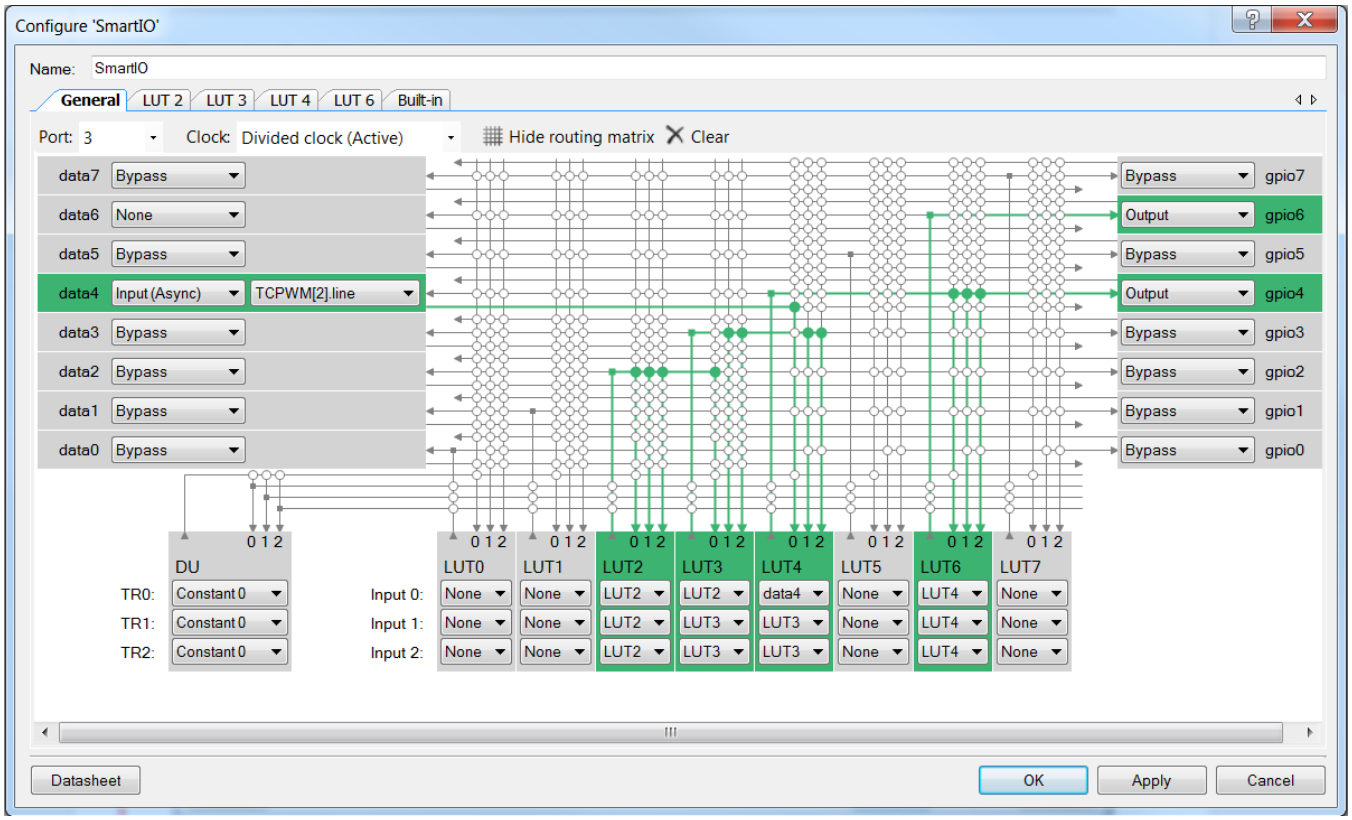

Figure 4. Smart I/O LUT Configuration

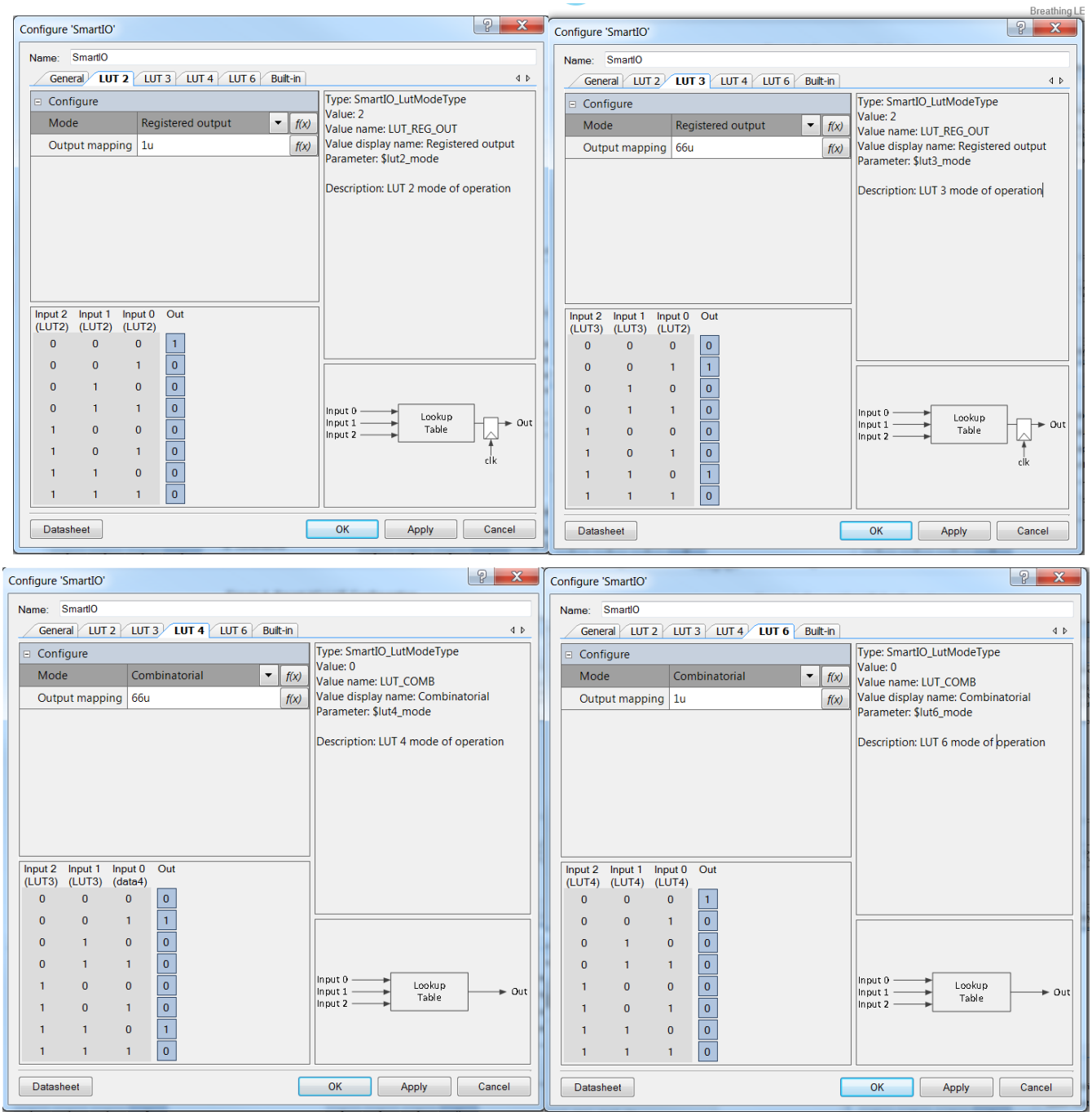

Operation

Plug the kit into your computer's USB port. Program the project into the kit, and observe the breathing effect on the red and blue LEDs on the RGB LEDs. The LEDs will transition from red to violet to blue and back in a gradual manner.

Related Documents

Table 2 lists all relevant application notes, code examples, knowledge base articles, device datasheets, and Component datasheets.

Table 2. Related Documents

Code Examples		
CE203303	PSoC® 3 and PSoC 5LP Breathing LED	Breathing LED using UDBs in PSoC 3 and PSoC 5LP.
CE97634	PSoC® 4 Breathing LED	Breathing LED using TCPWM and UDBs in PSoC 4.
CE209975	Clock Buffer with Smart I/O	Uses the Smart I/O to implement a clock buffer that can operate in chip deep-sleep mode
CE209976	SPI Slave Select Inversion with Smart I/O	Inverts the polarity of the SCB SPI slave select signal by using the Smart I/O component.
PSoC Creator Component Datasheets		
Smart I/O	Supports Smart I/O peripheral	
TCPWM	Supports PWM, Timer/Counter and QuadDec modes	
Clock	Supports clocks dividers for HFCLK	
Pins	Supports connection of hardware resources to physical pins	
Device Documentation		
PSoC 4 Datasheets		
PSoC 4 Technical Reference Manuals		
Development Kit (DVK) Documentation		
PSoC 4 Kits		

Document History

Document Title: CE209974 - Breathing LED with Smart I/O™

Document Number: 002-09974

Revision	Submission Date	Description of Change
**	4/15/16	New code example
*A	2/24/17	Updated Smart I/O component to v1.10

Worldwide Sales and Design Support

Cypress maintains a worldwide network of offices, solution centers, manufacturer's representatives, and distributors. To find the office closest to you, visit us at Cypress Locations.

Products

ARM® Cortex® Microcontrollers	cypress.com/arm
Automotive	cypress.com/automotive
Clocks & Buffers	cypress.com/clocks
Interface	cypress.com/interface
Internet of Things	cypress.com/iot
Memory	cypress.com/memory
Microcontrollers	cypress.com/mcu
PSoC	cypress.com/psoc
Power Management ICs	cypress.com/pmic
Touch Sensing	cypress.com/touch
USB Controllers	cypress.com/usb
Wireless Connectivity	cypress.com/wireless

PSoC® Solutions

PSoC 1 | PSoC 3 | PSoC 4 | PSoC 5LP

Cypress Developer Community

Forums | WICED IOT Forums | Projects | Videos | Blogs | Training | Components

Technical Support

cypress.com/support

All other trademarks or registered trademarks referenced herein are the property of their respective owners.

Cypress Semiconductor
198 Champion Court
San Jose, CA 95134-1709

© Cypress Semiconductor Corporation, 2016-2017. This document is the property of Cypress Semiconductor Corporation and its subsidiaries, including Spansion LLC ("Cypress"). This document, including any software or firmware included or referenced in this document ("Software"), is owned by Cypress under the intellectual property laws and treaties of the United States and other countries worldwide. Cypress reserves all rights under such laws and treaties and does not, except as specifically stated in this paragraph, grant any license under its patents, copyrights, trademarks, or other intellectual property rights. If the Software is not accompanied by a license agreement and you do not otherwise have a written agreement with Cypress governing the use of the Software, then Cypress hereby grants you a personal, non-exclusive, nontransferable license (without the right to sublicense) (1) under its copyright rights in the Software (a) for Software provided in source code form, to modify and reproduce the Software solely for use with Cypress hardware products, only internally within your organization, and (b) to distribute the Software in binary code form externally to end users (either directly or indirectly through resellers and distributors), solely for use on Cypress hardware product units, and (2) under those claims of Cypress's patents that are infringed by the Software (as provided by Cypress, unmodified) to make, use, distribute, and import the Software solely for use with Cypress hardware products. Any other use, reproduction, modification, translation, or compilation of the Software is prohibited.

TO THE EXTENT PERMITTED BY APPLICABLE LAW, CYPRESS MAKES NO WARRANTY OF ANY KIND, EXPRESS OR IMPLIED, WITH REGARD TO THIS DOCUMENT OR ANY SOFTWARE OR ACCOMPANYING HARDWARE, INCLUDING, BUT NOT LIMITED TO, THE IMPLIED WARRANTIES OF MERCHANTABILITY AND FITNESS FOR A PARTICULAR PURPOSE. To the extent permitted by applicable law, Cypress reserves the right to make changes to this document without further notice. Cypress does not assume any liability arising out of the application or use of any product or circuit described in this document. Any information provided in this document, including any sample design information or programming code, is provided only for reference purposes. It is the responsibility of the user of this document to properly design, program, and test the functionality and safety of any application made of this information and any resulting product. Cypress products are not designed, intended, or authorized for use as critical components in systems designed or intended for the operation of weapons, weapons systems, nuclear installations, life-support devices or systems, other medical devices or systems (including resuscitation equipment and surgical implants), pollution control or hazardous substances management, or other uses where the failure of the device or system could cause personal injury, death, or property damage ("Unintended Uses"). A critical component is any component of a device or system whose failure to perform can be reasonably expected to cause the failure of the device or system, or to affect its safety or effectiveness. Cypress is not liable, in whole or in part, and you shall and hereby do release Cypress from any claim, damage, or other liability arising from or related to all Unintended Uses of Cypress products. You shall indemnify and hold Cypress harmless from and against all claims, costs, damages, and other liabilities, including claims for personal injury or death, arising from or related to any Unintended Uses of Cypress products.

Cypress, the Cypress logo, Spansion, the Spansion logo, and combinations thereof, WICED, PSoC, CapSense, EZ-USB, F-RAM, and Traveo are trademarks or registered trademarks of Cypress in the United States and other countries. For a more complete list of Cypress trademarks, visit cypress.com. Other names and brands may be claimed as property of their respective owners.