CE204022 - PSoC® 4 IDAC7 Sawtooth Waveform Generator

Objective

This code example shows the user the basics of using the IDAC7 found in some PSoC 4 devices. A simple sawtooth or voltage ramp waveform is generated using the IDAC7 current Digital to Analog converter.

Overview

This code example generates a linear voltage ramp (sawtooth) waveform by incrementing the current DAC's output until the maximum value, it then starts back at zero. Since the IDAC7 is a current DAC, an external load resistor is used to generate a voltage from the current source.

Requirements

Tool: PSoC Creator 4.1 SP2 or higher

Programming Language: C (GCC 4.9.0) or higher

Associated Parts: PSoC 4000S, PSoC 4100S and PSoC Analog Coprocessor

Related Hardware: CY8CKIT-041-40XX, CY8CKIT-041-41XX and CY8CKIT-048

Design

This simple design demonstrates how to create a voltage waveform from a current source. The IDAC is used to source a current through an external resistor connected to Vss (see Figure 1). The waveform is seen across the resistor between Vss and Vout. The internal IDAC7 is connected to GPIO port P0[7]. The Load Resistor is connected between P0[7] and Vss as shown in Figure 1.

Figure 1. Voltage Ramp Generator Schematic

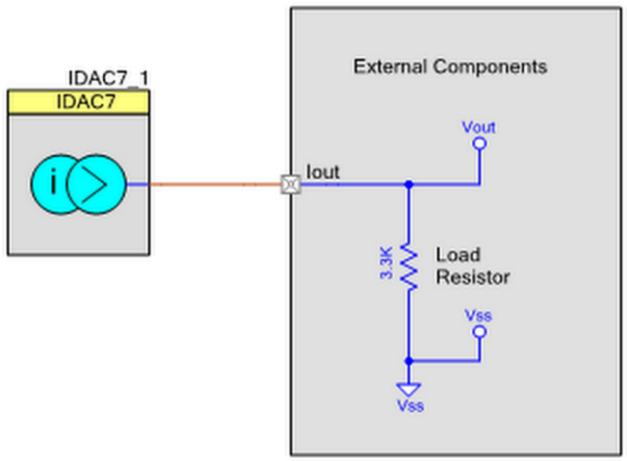

Design Considerations

Use Ohms law, R = V/I, to determine the load resistor or voltage range for a specific project. In this example the 3.3-kΩ load resistor was selected to generate a 2-V peak-to-peak signal using the highest current range (600 µA), as Equation 1 shows.

Equation 1 $$\text{RLoad} = \frac{2\text{V}}{600\text{uA}} = 3.3\ K\ Ohms$$

By either changing the load resistor and/or selecting one of 6 current ranges, any voltage range between the supply rails can be achieved. Additionally a waveform may be referenced to Vdda instead of Vss by changing the Polarity to “Negative (Sink)” and connecting the load resistor to Vdda instead of Vss. The IDAC’s range and polarity may also be changed during runtime with the IDAC7_1_SetRange() and IDAC7_1_SetPolarity() functions respectively.

Hardware Setup

For this code example a 3.3-K resistor needs to be connected from Port P0[7] to Vss as shown in Figure 1. Connect an oscilloscope across the resistor to observe the waveform. The attached project is configured for the CY8CKIT-048 but can easily be changed to accommodate the CY8CKIT-041 by simply changing the Device and Pin, see Table 1 below.

Table 1. Device and GPIO Configuration

Kit	PSoC Device	Output Pin (Iout)
CY8CKIT-048	CY8C4A45LGI-483	P0[7]
CY8CKIT-041	CY8C4045AZI-S413	P2[0]

Components

Table 2 lists the PSoC Creator Components used in this example, as well as the hardware resources used.

Table 2. List of PSoC Creator Components

Component or User Module	Version	Hardware Resources
IDAC7_1	1.0	CapSense® block
Iout	2.20	GPIO (P0[7])
Resistor	1.0	External Components

Parameter Settings

The IDAC7 component has three parameters, Polarity, Range, and Value. For this example, the Polarity should be set to “Positive (Source)” and the Range to “0-609.6 uA”. The Value does not matter since it will be changed during runtime in the code.

Figure 2. IDAC7 User Interface

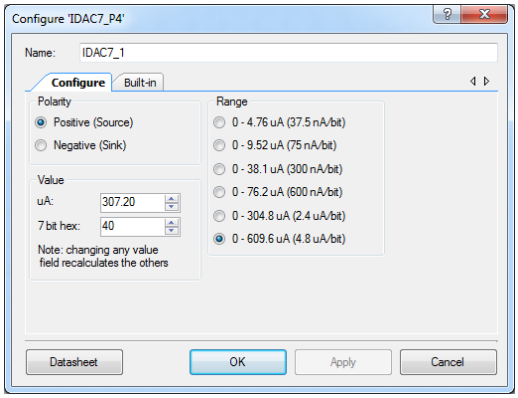

Operation

1) Attach a 3.3-K load resistor between ports P0[7] and Vss.
2) Attach a scope probe across the load resistor.
3) Observe a 2-volt peak-to-peak sawtooth waveform on oscilloscope.

Related Documents

Table 3 lists all relevant application notes, code examples, knowledge base articles, device datasheets, and Component datasheets.

Table 3. Related Documents

Application Notes	
AN211293	Getting Started with PSoC Analog Coprocessor
PSoC Creator Component Datasheets	
IDAC7	IDAC7 Datasheet
Pins	General Purpose IO Pins
Device Documentation	
CY8C4Axx Datasheet	PSoC Analog Coprocessor: CY8C4Axx Family Datasheet
PSoC 4000S Datasheet	PSoC 4: PSoC 4000S Family Datasheet Programmable System-on-Chip (PSoC)
PSoC 4100S Datasheet	PSoC 4: PSOC 4100S Family Datasheet Programmable System-on-Chip (PSOC)
Development Kit (DVK) Documentation	
CY8CKIT-048 PSoC® Analog Coprocessor Pioneer Kit	
CY8CKIT-041-40XX PSoC® 4 S-Series Kit	
PSoC® Family Web Page	
PSoC Analog Coprocessor	
PSoC 4	

Document History

Document Title: CE204022 - PSoC® 4 IDAC7 Sawtooth Waveform Generator

Document Number: 002-04022

Revision	ECN	Orig. of Change	Submission Date	Description of Change
**	5265164	MEH	1/22/2016	New Code Example
*A	5723938	MEH	05/19/2017	Added links to 4000S and 4100S datasheet and kits. Added hyperlinks to PSoC Analog Coprocessor collateral

Worldwide Sales and Design Support

Cypress maintains a worldwide network of offices, solution centers, manufacturer's representatives, and distributors. To find the office closest to you, visit us at Cypress Locations.

Products

ARM® Cortex® Microcontrollers	cypress.com/arm
Automotive	cypress.com/automotive
Clocks & Buffers	cypress.com/clocks
Interface	cypress.com/interface
Internet of Things	cypress.com/iot
Memory	cypress.com/memory
Microcontrollers	cypress.com/mcu
PSoC	cypress.com/psoc
Power Management ICs	cypress.com/pmic
Touch Sensing	cypress.com/touch
USB Controllers	cypress.com/usb
Wireless Connectivity	cypress.com/wireless

PSoC® Solutions

PSoC 1 | PSoC 3 | PSoC 4 | PSoC 5LP

Cypress Developer Community

Forums | WICED IOT Forums | Projects | Videos | Blogs | Training | Components

Technical Support

cypress.com/support

All other trademarks or registered trademarks referenced herein are the property of their respective owners.

Cypress Semiconductor
198 Champion Court
San Jose, CA 95134-1709

© Cypress Semiconductor Corporation, 2016-2017. This document is the property of Cypress Semiconductor Corporation and its subsidiaries, including Spansion LLC ("Cypress"). This document, including any software or firmware included or referenced in this document ("Software"), is owned by Cypress under the intellectual property laws and treaties of the United States and other countries worldwide. Cypress reserves all rights under such laws and treaties and does not, except as specifically stated in this paragraph, grant any license under its patents, copyrights, trademarks, or other intellectual property rights. If the Software is not accompanied by a license agreement and you do not otherwise have a written agreement with Cypress governing the use of the Software, then Cypress hereby grants you a personal, non-exclusive, nontransferable license (without the right to sublicense) (1) under its copyright rights in the Software (a) for Software provided in source code form, to modify and reproduce the Software solely for use with Cypress hardware products, only internally within your organization, and (b) to distribute the Software in binary code form externally to end users (either directly or indirectly through resellers and distributors), solely for use on Cypress hardware product units, and (2) under those claims of Cypress's patents that are infringed by the Software (as provided by Cypress, unmodified) to make, use, distribute, and import the Software solely for use with Cypress hardware products. Any other use, reproduction, modification, translation, or compilation of the Software is prohibited.

TO THE EXTENT PERMITTED BY APPLICABLE LAW, CYPRESS MAKES NO WARRANTY OF ANY KIND, EXPRESS OR IMPLIED, WITH REGARD TO THIS DOCUMENT OR ANY SOFTWARE OR ACCOMPANYING HARDWARE, INCLUDING, BUT NOT LIMITED TO, THE IMPLIED WARRANTIES OF MERCHANTABILITY AND FITNESS FOR A PARTICULAR PURPOSE. To the extent permitted by applicable law, Cypress reserves the right to make changes to this document without further notice. Cypress does not assume any liability arising out of the application or use of any product or circuit described in this document. Any information provided in this document, including any sample design information or programming code, is provided only for reference purposes. It is the responsibility of the user of this document to properly design, program, and test the functionality and safety of any application made of this information and any resulting product. Cypress products are not designed, intended, or authorized for use as critical components in systems designed or intended for the operation of weapons, weapons systems, nuclear installations, life-support devices or systems, other medical devices or systems (including resuscitation equipment and surgical implants), pollution control or hazardous substances management, or other uses where the failure of the device or system could cause personal injury, death, or property damage ("Unintended Uses"). A critical component is any component of a device or system whose failure to perform can be reasonably expected to cause the failure of the device or system, or to affect its safety or effectiveness. Cypress is not liable, in whole or in part, and you shall and hereby do release Cypress from any claim, damage, or other liability arising from or related to all Unintended Uses of Cypress products. You shall indemnify and hold Cypress harmless from and against all claims, costs, damages, and other liabilities, including claims for personal injury or death, arising from or related to any Unintended Uses of Cypress products.

Cypress, the Cypress logo, Spansion, the Spansion logo, and combinations thereof, PSoC, CapSense, EZ-USB, F-RAM, and Traveo are trademarks or registered trademarks of Cypress in the United States and other countries. For a more complete list of Cypress trademarks, visit cypress.com. Other names and brands may be claimed as property of their respective owners.