CE203972 – PSoC CY8C4Axx Comparator with Programmable Voltage Reference

Objective

This code example uses a programmable voltage reference and a single comparator to determine if an input voltage is between two specified voltages.

Requirements

Tool: PSoC Creator 3.3 SP2 or higher

Programming Language: C (Arm® GCC 4.9.0) or higher

Associated Parts: PSoC Analog Coprocessor

Related Hardware: CY8CKIT-048

Overview

This code example demonstrates how to use the Programmable Voltage Reference found in the PSoC CY8C4Axx devices. The reference is alternated between a high and low value, so you can determine if the input voltage is within a given window, below the minimum, or above the maximum voltage. The tri-color LED will display red if the input voltage is above the maximum value, blue if the input is below the low limit, and green if input is between the high and low limits.

Hardware Setup

The resistors and LEDs shown Figure 1 are mounted on the CY8CKIT-048 kit. The three Off-Chip LEDs are part of a single RGB (Red, Green, Blue) LED on the development board. You must connect a potentiometer between V_{SS} and V_{DD}. Instead of a potentiometer, you can use any voltage source between V_{SS} and V_{DD}.

Software Setup

None.

Operation

To evaluate this code example, perform the following steps:

1. Attach a potentiometer as shown on the schematic in Figure 1 or apply an external voltage source to port P0[7]. Make sure that the external voltage source stays within the range of the PSoC's supply of V_{SS} to V_{DD}.
2. Slowly adjust the input voltage from 0 V to above 1.5 V.
3. Monitor the LED status with respect to the input voltage:
    - Blue LED should be ON when the input voltage is below 0.5 V.
    - Green LED should be ON when the voltage is between 0.5 V and 1.0 V.
    - Red LED should be ON when voltage exceeds 1.0 V.

The levels at which the different LEDs are ON may be adjusted in the source code found in *main.c*. Modify the "HIGH_LIMIT" and "LOW_LIMIT" #define statements to adjust the high and low limits of the window comparator.

Design and Implementation

This design uses a single comparator (Comp_1) in conjunction with a programmable voltage reference (PVref_1) to create a window comparator. A window comparator indicates when a voltage is between two set points. Normally two comparators would be required, but since the programmable voltage reference is adjustable, only one comparator is required. The firmware adjusts the voltage reference, checks the comparator output, and then turns ON the correct LED to signal if the voltage is between the set points, above the high set point, or below the low set point.

Figure 1. Project Schematic

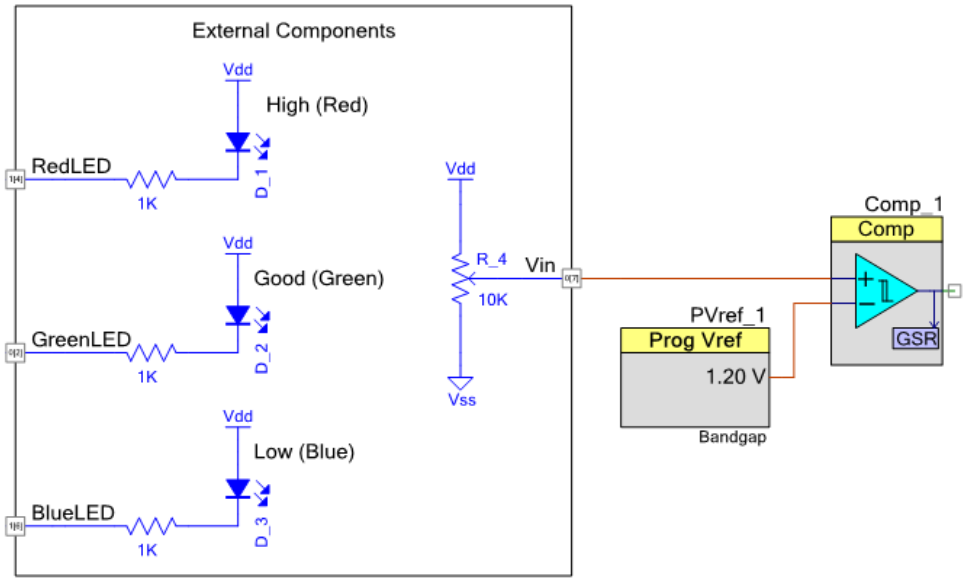

Components and Settings

Table 1 lists the PSoC Creator Components used in this example, as well as the hardware resources used by each.

Table 1. PSoC Creator Components

Component or User Module	Version	Hardware Resources
Comp_1	1.20	½ of a CTB/CTBm
PVref_1	1.0	¼ of the programmable reference block
Vin (Analog Pin)	2.20	GPIO (P0[7])
RedLED	2.20	GPIO (P1[4])
GreenLED	2.20	GPIO (P0[2])
BlueLED	2.20	GPIO (P1[6])

Parameter Settings

Both the programmable voltage reference (PVrev_1) and the comparator (Comp_1) components use their default configuration for this code example.

Related Documents

Application Notes	
AN211293	Getting Started with PSoC® Analog Coprocessor
PSoC Creator Component Datasheets	
Comp	PSoC 4 Voltage Comparator (Comp)
PVref	PSoC 4 Programmable Voltage Reference
Pins	General Purpose IO Pins
Device Documentation	
Cy8C4Axx Datasheet	PSoC® Analog Coprocessor: CY8C4Axx Family Datasheet
Development Kit (DVK) Documentation	
CY8CKIT-048 PSoC® Analog Coprocessor Pioneer Kit	
PSoC® Family Web Page	
PSoC® Analog Coprocessor	

Document History

Document Title: CE203972 – PSoC CY8C4Axx Comparator with Programmable Voltage Reference

Document Number: 002-03972

Revision	ECN	Orig. of Change	Submission Date	Description of Change
**	5101225	MEH	1/22/2016	New Code Example
*A	6586014	MEH	06/11/2019	Sunset Review Updated the PVref link in Related Documents Updated Template

Worldwide Sales and Design Support

Cypress maintains a worldwide network of offices, solution centers, manufacturer's representatives, and distributors. To find the office closest to you, visit us at Cypress Locations.

Products

Arm® Cortex® Microcontrollers	cypress.com/arm
Automotive	cypress.com/automotive
Clocks & Buffers	cypress.com/clocks
Interface	cypress.com/interface
Internet of Things	cypress.com/iot
Memory	cypress.com/memory
Microcontrollers	cypress.com/mcu
PSoC	cypress.com/psoc
Power Management ICs	cypress.com/pmic
Touch Sensing	cypress.com/touch
USB Controllers	cypress.com/usb
Wireless Connectivity	cypress.com/wireless

PSoC® Solutions

PSoC 1 | PSoC 3 | PSoC 4 | PSoC 5LP | PSoC 6 MCU

Cypress Developer Community

Community | Projects | Videos | Blogs | Training | Components

Technical Support

cypress.com/support

All other trademarks or registered trademarks referenced herein are the property of their respective owners.

Cypress Semiconductor
198 Champion Court
San Jose, CA 95134-1709

© Cypress Semiconductor Corporation, 2016-2019. This document is the property of Cypress Semiconductor Corporation and its subsidiaries ("Cypress"). This document, including any software or firmware included or referenced in this document ("Software"), is owned by Cypress under the intellectual property laws and treaties of the United States and other countries worldwide. Cypress reserves all rights under such laws and treaties and does not, except as specifically stated in this paragraph, grant any license under its patents, copyrights, trademarks, or other intellectual property rights. If the Software is not accompanied by a license agreement and you do not otherwise have a written agreement with Cypress governing the use of the Software, then Cypress hereby grants you a personal, non-exclusive, nontransferable license (without the right to sublicense) (1) under its copyright rights in the Software (a) for Software provided in source code form, to modify and reproduce the Software solely for use with Cypress hardware products, only internally within your organization, and (b) to distribute the Software in binary code form externally to end users (either directly or indirectly through resellers and distributors), solely for use on Cypress hardware product units, and (2) under those claims of Cypress's patents that are infringed by the Software (as provided by Cypress, unmodified) to make, use, distribute, and import the Software solely for use with Cypress hardware products. Any other use, reproduction, modification, translation, or compilation of the Software is prohibited.

TO THE EXTENT PERMITTED BY APPLICABLE LAW, CYPRESS MAKES NO WARRANTY OF ANY KIND, EXPRESS OR IMPLIED, WITH REGARD TO THIS DOCUMENT OR ANY SOFTWARE OR ACCOMPANYING HARDWARE, INCLUDING, BUT NOT LIMITED TO, THE IMPLIED WARRANTIES OF MERCHANTABILITY AND FITNESS FOR A PARTICULAR PURPOSE. No computing device can be absolutely secure. Therefore, despite security measures implemented in Cypress hardware or software products, Cypress shall have no liability arising out of any security breach, such as unauthorized access to or use of a Cypress product. CYPRESS DOES NOT REPRESENT, WARRANT, OR GUARANTEE THAT CYPRESS PRODUCTS, OR SYSTEMS CREATED USING CYPRESS PRODUCTS, WILL BE FREE FROM CORRUPTION, ATTACK, VIRUSES, INTERFERENCE, HACKING, DATA LOSS OR THEFT, OR OTHER SECURITY INTRUSION (collectively, "Security Breach"). Cypress disclaims any liability relating to any Security Breach, and you shall and hereby do release Cypress from any claim, damage, or other liability arising from any Security Breach. In addition, the products described in these materials may contain design defects or errors known as errata which may cause the product to deviate from published specifications. To the extent permitted by applicable law, Cypress reserves the right to make changes to this document without further notice. Cypress does not assume any liability arising out of the application or use of any product or circuit described in this document. Any information provided in this document, including any sample design information or programming code, is provided only for reference purposes. It is the responsibility of the user of this document to properly design, program, and test the functionality and safety of any application made of this information and any resulting product. "High-Risk Device" means any device or system whose failure could cause personal injury, death, or property damage. Examples of High-Risk Devices are weapons, nuclear installations, surgical implants, and other medical devices. "Critical Component" means any component of a High-Risk Device whose failure to perform can be reasonably expected to cause, directly or indirectly, the failure of the High-Risk Device, or to affect its safety or effectiveness. Cypress is not liable, in whole or in part, and you shall and hereby do release Cypress from any claim, damage, or other liability arising from any use of a Cypress product as a Critical Component in a High-Risk Device. You shall indemnify and hold Cypress, its directors, officers, employees, agents, affiliates, distributors, and assigns harmless from and against all claims, costs, damages, and expenses, arising out of any claim, including claims for product liability, personal injury or death, or property damage arising from any use of a Cypress product as a Critical Component in a High-Risk Device. Cypress products are not intended or authorized for use as a Critical Component in any High-Risk Device except to the limited extent that (i) Cypress's published data sheet for the product explicitly states Cypress has qualified the product for use in a specific High-Risk Device, or (ii) Cypress has given you advance written authorization to use the product as a Critical Component in the specific High-Risk Device and you have signed a separate indemnification agreement.

Cypress, the Cypress logo, Spansion, the Spansion logo, and combinations thereof, WICED, PSoC, CapSense, EZ-USB, F-RAM, and Traveo are trademarks or registered trademarks of Cypress in the United States and other countries. For a more complete list of Cypress trademarks, visit cypress.com. Other names and brands may be claimed as property of their respective owners.

.