CE203303 - PSoC® 3 and PSoC 5LP Breathing LED

Objective

This example demonstrates the flexibility of a PSoC® 3 or PSoC 5LP, by implementing a breathing LED effect exclusively in hardware, with no CPU usage beyond initialization.

Overview

This example uses two PWMs and an XOR gate to make an LED gradually cycle through increasing and decreasing brightness. There is no CPU usage beyond PWM initialization.

Requirements

Tool: PSoC Creator 3.2 or higher

Programming Language: C (GCC 4.8.4)

Associated Parts: All PSoC 3 and PSoC 5LP parts

Related Hardware: CY8CKIT-059, CY8CKIT-030, CY8CKIT-050, CY8CKIT-001

Design

The hardware design features two PWM Components, as Figure 1 shows. They have slightly different periods, with 50% duty cycles. Routing them through an exclusive-OR (XOR) gate yields an output signal with a gradually changing duty cycle. Driving an LED with this signal results in a "breathing" effect, where the LED gradually gets brighter and dimmer. The rate of change is proportional to the difference between the PWM output frequencies.

Figure 1. Breathing LED Schematic (Pin and LED are selected for CY8CKIT-059)

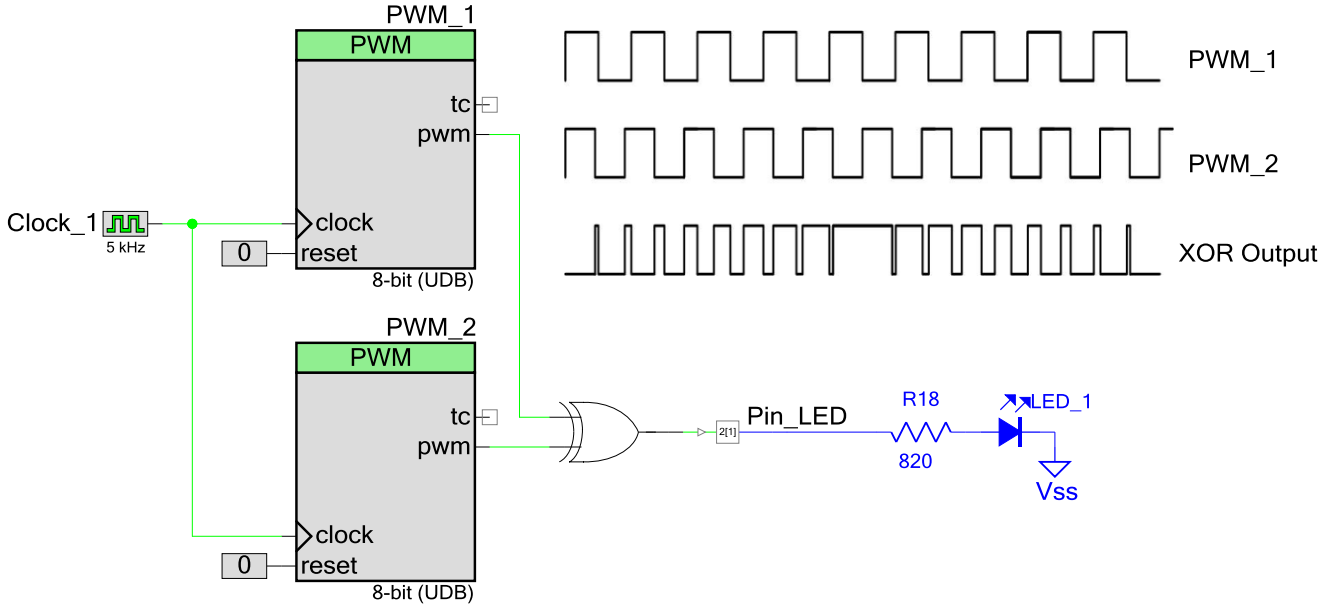

Design Considerations

This design can be extended in a number of ways:

- Change the PWMs from 8-bit to 16-bit to get more precise control of the breathing rate.
- Use fixed-block PWMs (FF-TCPWM) instead of UDB-based PWMs to save UDB resources for other functions.
- Connect a kit button through an input pin to the PWMs' enable terminals. This allows hardware control of whether or not the LED breathes, with no CPU usage.
- Add an analog-to-digital converter (ADC), with a kit potentiometer as an analog input. Then use CPU firmware to change the period of one of the PWMs based on the potentiometer position. This allows potentiometer-based control of the breathing rate.

This code example is designed for the PSoC 5LP device family and associated CY8CKIT-059 kit. The design is easily portable to other PSoC 3, PSoC 4 and PSoC 5LP devices and kits, typically by just changing the LED, button, or potentiometer pin assignments.

PSoC Creator Components

Table 1 lists the PSoC Creator Components used in this example, as well as the hardware resources used by each.

Table 1. List of PSoC Creator Components

Component	Hardware Resources
PWM_1	1 TCPWM, or ~1 UDB
PWM_2	1 TCPWM, or ~1 UDB
XOR gate	1 UDB macrocell
Clock_1	1 clock divider
Pin_LED	1 pin

Parameter Settings

Figure 2 shows the changed settings for the PWM Components.

Figure 2. PWMs Configuration

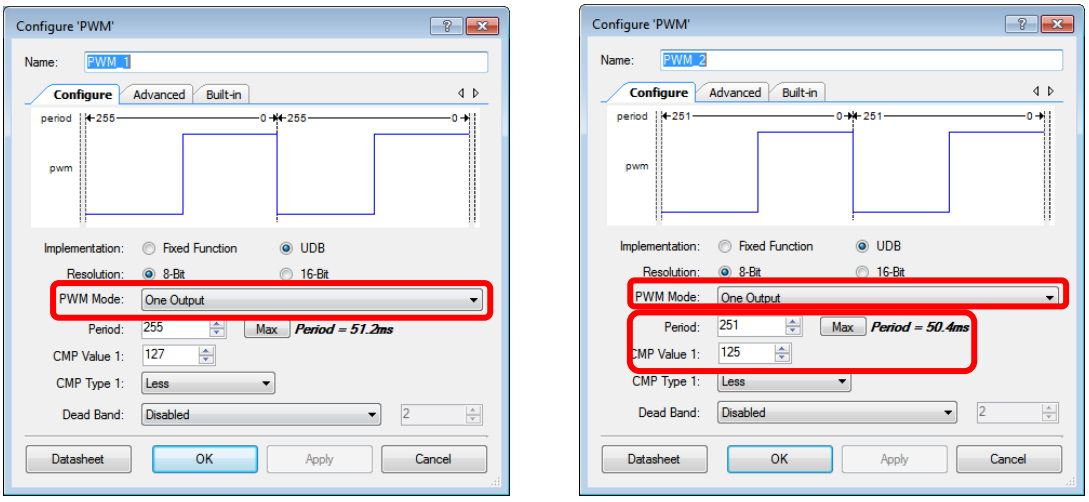

Operation

Plug the CY8CKIT-059 board into your computer's USB port. Program the project into the kit, and observe the breathing effect on the kit's blue LED.

Related Documents

Table 2 lists all relevant application notes, code examples, knowledge base articles, device datasheets, and PSoC Creator Component datasheets.

Table 2. Related Documents

Application Notes		
AN54181, AN77759	Getting Started with PSoC 3 Getting Started with PSoC 5LP	Describes the PSoC 3 and PSoC 5LP, and how to build this code example.
PSoC Creator Component Datasheets		
PWM	Supports fixed block and UDB-based PWMs	
Digital Logic Gates	Supports creation of UDB-based logic gates to perform Boolean operations	
Pins	Supports connection of hardware resources to physical pins	
Device Documentation		
PSoC 3 Datasheets	PSoC 3 Technical Reference Manuals	
PSoC 5LP Datasheets	PSoC 5LP Technical Reference Manuals	
Development Kit (DVK) Documentation		
PSoC 3 and PSoC 5LP Kits		

PSoC Resources

If you are new to PSoC, Cypress provides a wealth of data at www.cypress.com to help you to select the right PSoC device for your design, and quickly and effectively integrate the device into your design. For a comprehensive list of resources, see knowledge base article KBA86521, How to Design with PSoC 3, PSoC 4, and PSoC 5LP. The following is an abbreviated list for PSoC 3 and PSoC 5LP:

- **Overview:** PSoC Portfolio, PSoC Roadmap
- **Product Selectors:** PSoC 1, PSoC 3, PSoC 4, or PSoC 5LP. In addition, PSoC Creator includes a device selection tool.
- **Datasheets:** Describe and provide electrical specifications for the PSoC 3 and PSoC 5LP device families
- **Technical Reference Manuals (TRM):** Provide detailed descriptions of the architecture and registers in the PSoC 3 and PSoC 5LP device families.
- **Application Notes and Code Examples:** Cover a broad range of topics, from basic to advanced level. Many of the application notes include code examples. PSoC Creator provides additional code examples. Recommended application notes for getting started with PSoC 3 and PSoC 5LP are:
  - AN54181, Getting Started with PSoC 3
  - AN77759, Getting Started with PSoC 5LP
  - AN61290, Hardware Design Considerations
  - AN57821, Mixed Signal Circuit Board Layout
  - AN81623, Digital Design Best Practices
  - AN73854, Introduction To Bootloaders
- **PSoC Training Videos:** These videos provide step-by-step instructions on how to get started building complex designs with PSoC.
- **Development Kits:**
  - CY8CKIT-059 is a low-cost platform for prototyping products with PSoC 5LP. It has a unique snap-away programmer and debugger on the USB connector:



  - CY8CKIT-030 and CY8CKIT-050 are designed for analog performance. They enable you to evaluate, develop and prototype high precision analog, low-power and low-voltage applications powered by PSoC 3 or PSoC 5LP.
  - CY8CKIT-001 provides a common development platform for any one of the PSoC 1, PSoC 3, PSoC 4, or PSoC 5LP families of devices.

The MiniProg3 device provides an interface for flash programming and debug.

PSoC Creator

PSoC Creator is a free Windows-based Integrated Design Environment (IDE). It enables concurrent hardware and firmware design of systems based on PSoC 3, PSoC 4, and PSoC 5LP. See Figure 3 – with PSoC Creator, you can:

1. Drag and drop Components to build your hardware system design in the main design workspace
2. Codesign your application firmware with the PSoC hardware
3. Configure Components using configuration tools
4. Explore the library of 100+ Components
5. Review Component datasheets

Figure 3. PSoC Creator Features

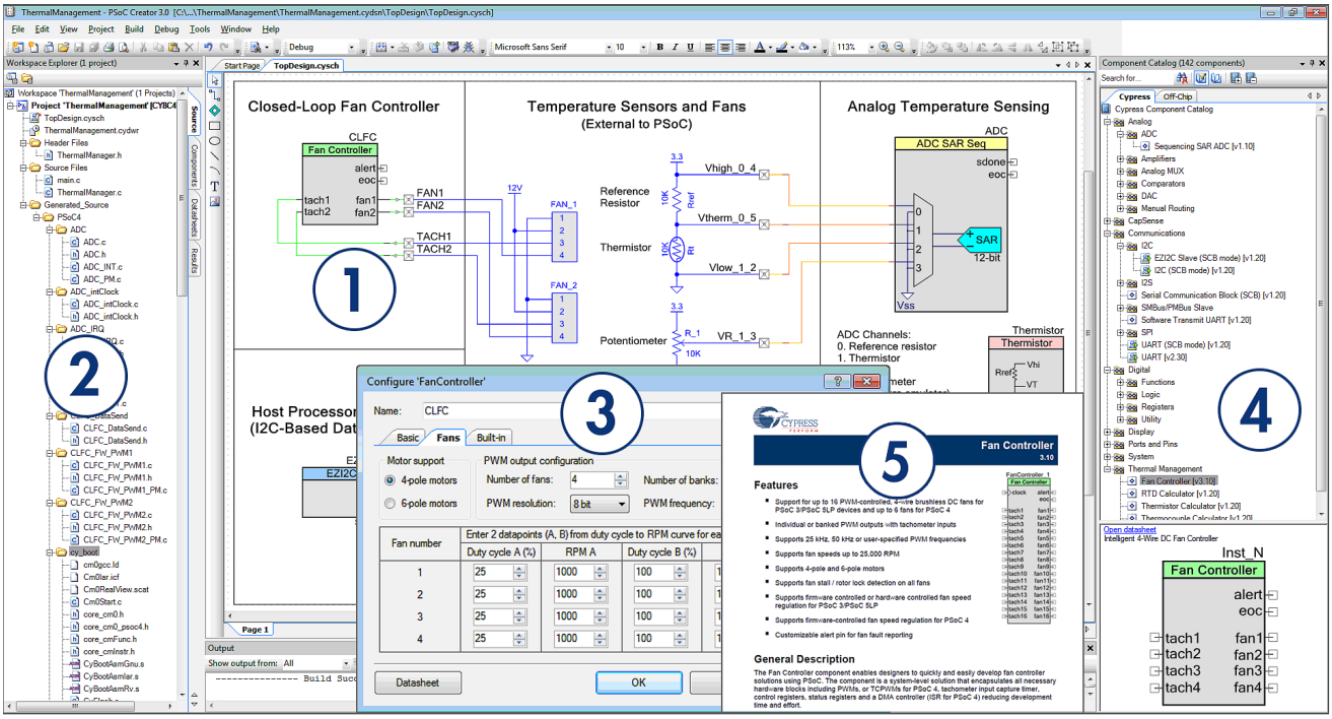

Document History

Document Title: PSoC® 3 and PSoC 5LP Breathing LED - CE203303

Document Number: 002-03303

Revision	ECN	Orig. of Change	Submission Date	Description of Change
**	4940060	MKEA	10/08/2015	New code example

Worldwide Sales and Design Support

Cypress maintains a worldwide network of offices, solution centers, manufacturer's representatives, and distributors. To find the office closest to you, visit us at Cypress Locations.

Products

Automotive	cypress.com/go/automotive
Clocks & Buffers	cypress.com/go/clocks
Interface	cypress.com/go/interface
Lighting & Power Control	cypress.com/go/powerpsoc
Memory	cypress.com/go/memory
PSoC	cypress.com/go/psoc
Touch Sensing	cypress.com/go/touch
USB Controllers	cypress.com/go/usb
Wireless/RF	cypress.com/go/wireless

PSoC® Solutions

psoc.cypress.com/solutions

PSoC 1 | PSoC 3 | PSoC 4 | PSoC 5LP

Cypress Developer Community

Community | Forums | Blogs | Video | Training

Technical Support

cypress.com/go/support

PSoC is a registered trademark and PSoC Creator is a trademark of Cypress Semiconductor Corp. All other trademarks or registered trademarks referenced herein are the property of their respective owners.

Cypress Semiconductor
198 Champion Court
San Jose, CA 95134-1709

Phone : 408-943-2600
Fax : 408-943-4730
Website : www.cypress.com

© Cypress Semiconductor Corporation, 2015. The information contained herein is subject to change without notice. Cypress Semiconductor Corporation assumes no responsibility for the use of any circuitry other than circuitry embodied in a Cypress product. Nor does it convey or imply any license under patent or other rights. Cypress products are not warranted nor intended to be used for medical, life support, life saving, critical control or safety applications, unless pursuant to an express written agreement with Cypress. Furthermore, Cypress does not authorize its products for use as critical components in life-support systems where a malfunction or failure may reasonably be expected to result in significant injury to the user. The inclusion of Cypress products in life-support systems application implies that the manufacturer assumes all risk of such use and in doing so indemnifies Cypress against all charges.
This Source Code (software and/or firmware) is owned by Cypress Semiconductor Corporation (Cypress) and is protected by and subject to worldwide patent protection (United States and foreign), United States copyright laws and international treaty provisions. Cypress hereby grants to licensee a personal, non-exclusive, non-transferable license to copy, use, modify, create derivative works of, and compile the Cypress Source Code and derivative works for the sole purpose of creating custom software and or firmware in support of licensee product to be used only in conjunction with a Cypress integrated circuit as specified in the applicable agreement. Any reproduction, modification, translation, compilation, or representation of this Source Code except as specified above is prohibited without the express written permission of Cypress.
Disclaimer: CYPRESS MAKES NO WARRANTY OF ANY KIND, EXPRESS OR IMPLIED, WITH REGARD TO THIS MATERIAL, INCLUDING, BUT NOT LIMITED TO, THE IMPLIED WARRANTIES OF MERCHANTABILITY AND FITNESS FOR A PARTICULAR PURPOSE. Cypress reserves the right to make changes without further notice to the materials described herein. Cypress does not assume any liability arising out of the application or use of any product or circuit described herein. Cypress does not authorize its products for use as critical components in life-support systems where a malfunction or failure may reasonably be expected to result in significant injury to the user. The inclusion of Cypress' product in a life-support systems application implies that the manufacturer assumes all risk of such use and in doing so indemnifies Cypress against all charges.
Use may be limited by and subject to the applicable Cypress software license agreement.