CE203303 - PSoC® 3 and PSoC 5LP Breathing LED

Objective

This example demonstrates the flexibility of a PSoC® 3 or PSoC 5LP, by implementing a breathing LED effect exclusively in hardware, with no CPU usage beyond initialization.

Overview

This example uses two PWMs and an XOR gate to make an LED gradually cycle through increasing and decreasing brightness. There is no CPU usage beyond PWM initialization.

Requirements

Tool: PSoC Creator 3.2 or higher

Programming Language: C (GCC 4.8.4)

Associated Parts: All PSoC 3 and PSoC 5LP parts

Related Hardware: CY8CKIT-059, CY8CKIT-030, CY8CKIT-050, CY8CKIT-001

Design

The hardware design features two PWM Components, as Figure 1 shows. They have slightly different periods, with 50% duty cycles. Routing them through an exclusive-OR (XOR) gate yields an output signal with a gradually changing duty cycle. Driving an LED with this signal results in a “breathing” effect, where the LED gradually gets brighter and dimmer. The rate of change is proportional to the difference between the PWM output frequencies.

Figure 1. Breathing LED Schematic (Pin and LED are selected for CY8CKIT-059)

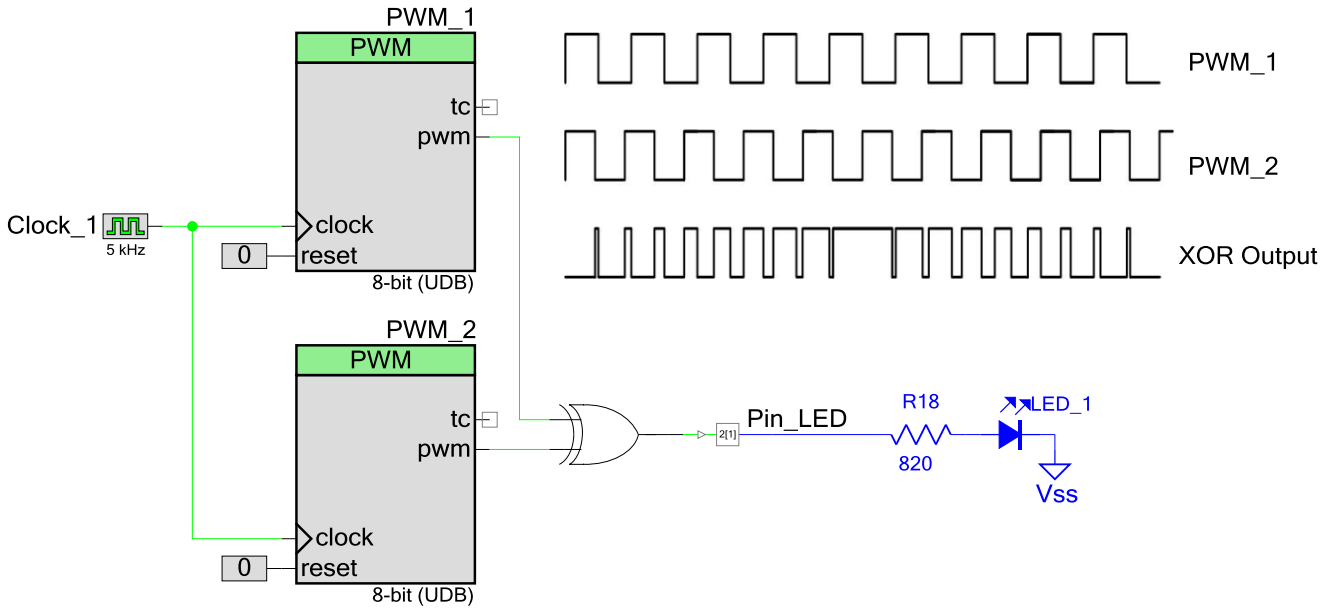

Design Considerations

This design can be extended in a number of ways:

- Change the PWMs from 8-bit to 16-bit to get more precise control of the breathing rate.
- Use fixed-block PWMs (FF-TCPWM) instead of UDB-based PWMs to save UDB resources for other functions.
- Connect a kit button through an input pin to the PWMs' enable terminals. This allows hardware control of whether or not the LED breathes, with no CPU usage.
- Add an analog-to-digital converter (ADC), with a kit potentiometer as an analog input. Then use CPU firmware to change the period of one of the PWMs based on the potentiometer position. This allows potentiometer-based control of the breathing rate.

This code example is designed for the PSoC 5LP device family and associated CY8CKIT-059 kit. The design is easily portable to other PSoC 3, PSoC 4 and PSoC 5LP devices and kits, typically by just changing the LED, button, or potentiometer pin assignments.

PSoC Creator Components

Table 1 lists the PSoC Creator Components used in this example, as well as the hardware resources used by each.

Table 1. List of PSoC Creator Components

Component	Hardware Resources
PWM_1	1 TCPWM, or ~1 UDB
PWM_2	1 TCPWM, or ~1 UDB
XOR gate	1 UDB macrocell
Clock_1	1 clock divider
Pin_LED	1 pin

Parameter Settings

Figure 2 shows the changed settings for the PWM Components.

Figure 2. PWMs Configuration

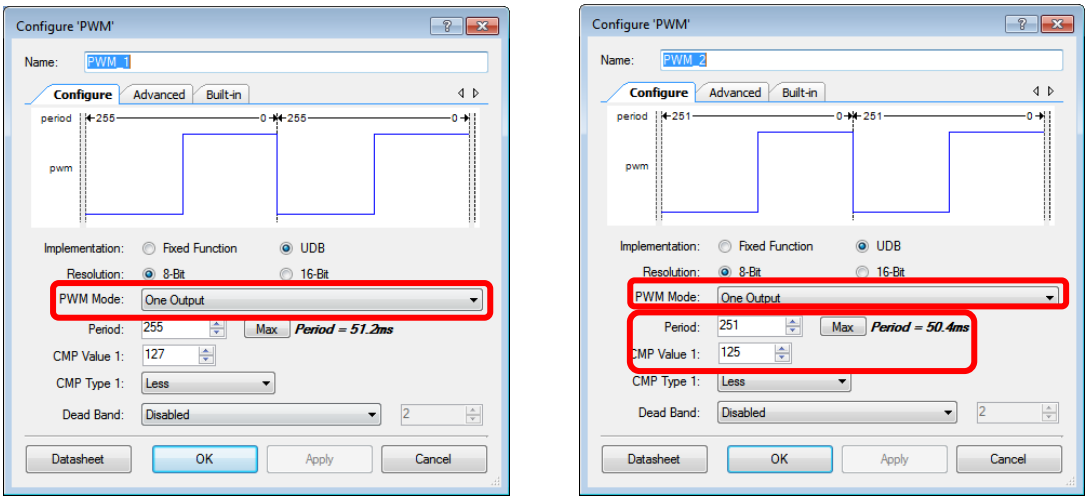

Operation

Plug the CY8CKIT-059 board into your computer's USB port. Program the project into the kit, and observe the breathing effect on the kit's blue LED.

Related Documents

Table 2 lists all relevant application notes, code examples, knowledge base articles, device datasheets, and PSoC Creator Component datasheets.

Table 2. Related Documents

Application Notes		
AN54181, AN77759	Getting Started with PSoC 3 Getting Started with PSoC 5LP	Describes the PSoC 3 and PSoC 5LP, and how to build this code example.
PSoC Creator Component Datasheets		
PWM	Supports fixed block and UDB-based PWMs	
Digital Logic Gates	Supports creation of UDB-based logic gates to perform Boolean operations	
Pins	Supports connection of hardware resources to physical pins	
Device Documentation		
PSoC 3 Datasheets	PSoC 3 Technical Reference Manuals	
PSoC 5LP Datasheets	PSoC 5LP Technical Reference Manuals	
Development Kit (DVK) Documentation		
PSoC 3 and PSoC 5LP Kits		

PSoC Resources

If you are new to PSoC, Cypress provides a wealth of data at www.cypress.com to help you to select the right PSoC device for your design, and quickly and effectively integrate the device into your design. For a comprehensive list of resources, see knowledge base article KBA86521, How to Design with PSoC 3, PSoC 4, and PSoC 5LP. The following is an abbreviated list for PSoC 3 and PSoC 5LP:

- **Overview:** PSoC Portfolio, PSoC Roadmap
- **Product Selectors:** PSoC 1, PSoC 3, PSoC 4, or PSoC 5LP. In addition, PSoC Creator includes a device selection tool.
- **Datasheets:** Describe and provide electrical specifications for the PSoC 3 and PSoC 5LP device families
- **Technical Reference Manuals (TRM):** Provide detailed descriptions of the architecture and registers in the PSoC 3 and PSoC 5LP device families.
- **Application Notes and Code Examples:** Cover a broad range of topics, from basic to advanced level. Many of the application notes include code examples. PSoC Creator provides additional code examples. Recommended application notes for getting started with PSoC 3 and PSoC 5LP are:
  - AN54181, Getting Started with PSoC 3
  - AN77759, Getting Started with PSoC 5LP
  - AN61290, Hardware Design Considerations
  - AN57821, Mixed Signal Circuit Board Layout
  - AN81623, Digital Design Best Practices
  - AN73854, Introduction To Bootloaders
- **PSoC Training Videos:** These videos provide step-by-step instructions on how to get started building complex designs with PSoC.
- **Development Kits:**
  - CY8CKIT-059 is a low-cost platform for prototyping products with PSoC 5LP. It has a unique snap-away programmer and debugger on the USB connector:



  - CY8CKIT-030 and CY8CKIT-050 are designed for analog performance. They enable you to evaluate, develop and prototype high precision analog, low-power and low-voltage applications powered by PSoC 3 or PSoC 5LP.
  - CY8CKIT-001 provides a common development platform for any one of the PSoC 1, PSoC 3, PSoC 4, or PSoC 5LP families of devices.

The MiniProg3 device provides an interface for flash programming and debug.

PSoC Creator

PSoC Creator is a free Windows-based Integrated Design Environment (IDE). It enables concurrent hardware and firmware design of systems based on PSoC 3, PSoC 4, and PSoC 5LP. See Figure 3 – with PSoC Creator, you can:

1. Drag and drop Components to build your hardware system design in the main design workspace
2. Codesign your application firmware with the PSoC hardware
3. Configure Components using configuration tools
4. Explore the library of 100+ Components
5. Review Component datasheets

Figure 3. PSoC Creator Features

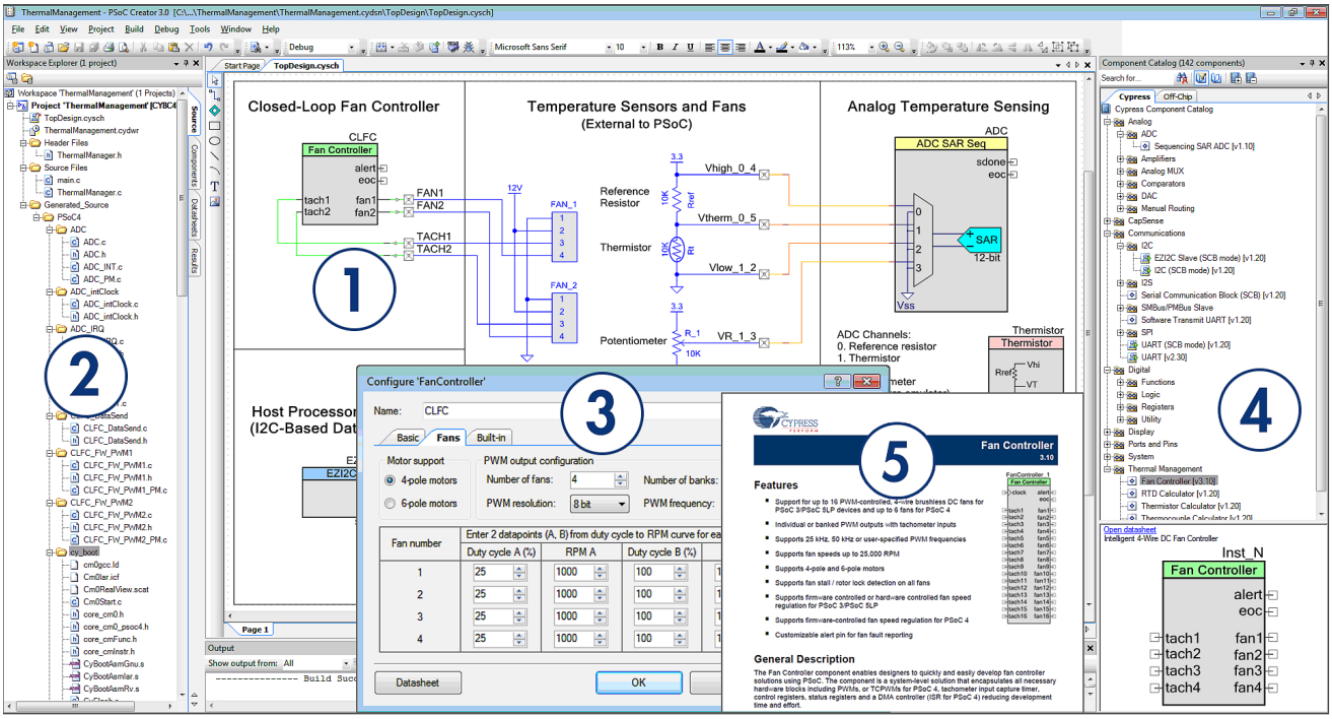

Document History

Document Title: PSoC® 3 and PSoC 5LP Breathing LED - CE203303

Document Number: 002-03303

Revision	ECN	Orig. of Change	Submission Date	Description of Change
**	4940060	MKEA	10/08/2015	New code example
*A	5733012	AESATP12	05/26/2017	Updated logo and copyright.

Worldwide Sales and Design Support

Cypress maintains a worldwide network of offices, solution centers, manufacturer's representatives, and distributors. To find the office closest to you, visit us at Cypress Locations.

Products

ARM® Cortex® Microcontrollers	cypress.com/arm
Automotive	cypress.com/automotive
Clocks & Buffers	cypress.com/clocks
Interface	cypress.com/interface
Internet of Things	cypress.com/iot
Memory	cypress.com/memory
Microcontrollers	cypress.com/mcu
PSoC	cypress.com/psoc
Power Management ICs	cypress.com/pmic
Touch Sensing	cypress.com/touch
USB Controllers	cypress.com/usb
Wireless Connectivity	cypress.com/wireless

PSoC® Solutions

PSoC 1 | PSoC 3 | PSoC 4 | PSoC 5LP | PSoC 6

Cypress Developer Community

Forums | WICED IOT Forums | Projects | Videos | Blogs | Training | Components

Technical Support

cypress.com/support

All other trademarks or registered trademarks referenced herein are the property of their respective owners.

Cypress Semiconductor
198 Champion Court
San Jose, CA 95134-1709

© Cypress Semiconductor Corporation, 2015-2017. This document is the property of Cypress Semiconductor Corporation and its subsidiaries, including Spansion LLC ("Cypress"). This document, including any software or firmware included or referenced in this document ("Software"), is owned by Cypress under the intellectual property laws and treaties of the United States and other countries worldwide. Cypress reserves all rights under such laws and treaties and does not, except as specifically stated in this paragraph, grant any license under its patents, copyrights, trademarks, or other intellectual property rights. If the Software is not accompanied by a license agreement and you do not otherwise have a written agreement with Cypress governing the use of the Software, then Cypress hereby grants you a personal, non-exclusive, nontransferable license (without the right to sublicense) (1) under its copyright rights in the Software (a) for Software provided in source code form, to modify and reproduce the Software solely for use with Cypress hardware products, only internally within your organization, and (b) to distribute the Software in binary code form externally to end users (either directly or indirectly through resellers and distributors), solely for use on Cypress hardware product units, and (2) under those claims of Cypress's patents that are infringed by the Software (as provided by Cypress, unmodified) to make, use, distribute, and import the Software solely for use with Cypress hardware products. Any other use, reproduction, modification, translation, or compilation of the Software is prohibited.

TO THE EXTENT PERMITTED BY APPLICABLE LAW, CYPRESS MAKES NO WARRANTY OF ANY KIND, EXPRESS OR IMPLIED, WITH REGARD TO THIS DOCUMENT OR ANY SOFTWARE OR ACCOMPANYING HARDWARE, INCLUDING, BUT NOT LIMITED TO, THE IMPLIED WARRANTIES OF MERCHANTABILITY AND FITNESS FOR A PARTICULAR PURPOSE. To the extent permitted by applicable law, Cypress reserves the right to make changes to this document without further notice. Cypress does not assume any liability arising out of the application or use of any product or circuit described in this document. Any information provided in this document, including any sample design information or programming code, is provided only for reference purposes. It is the responsibility of the user of this document to properly design, program, and test the functionality and safety of any application made of this information and any resulting product. Cypress products are not designed, intended, or authorized for use as critical components in systems designed or intended for the operation of weapons, weapons systems, nuclear installations, life-support devices or systems, other medical devices or systems (including resuscitation equipment and surgical implants), pollution control or hazardous substances management, or other uses where the failure of the device or system could cause personal injury, death, or property damage ("Unintended Uses"). A critical component is any component of a device or system whose failure to perform can be reasonably expected to cause the failure of the device or system, or to affect its safety or effectiveness. Cypress is not liable, in whole or in part, and you shall and hereby do release Cypress from any claim, damage, or other liability arising from or related to all Unintended Uses of Cypress products. You shall indemnify and hold Cypress harmless from and against all claims, costs, damages, and other liabilities, including claims for personal injury or death, arising from or related to any Unintended Uses of Cypress products.

Cypress, the Cypress logo, Spansion, the Spansion logo, and combinations thereof, WICED, PSoC, CapSense, EZ-USB, F-RAM, and Traveo are trademarks or registered trademarks of Cypress in the United States and other countries. For a more complete list of Cypress trademarks, visit cypress.com. Other names and brands may be claimed as property of their respective owners.