BCD to Decimal Decoder (1-of-10)

CY42 v1.0

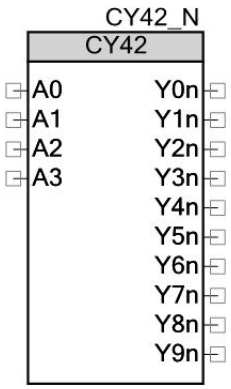

Features

- Mutually exclusive outputs
- 1-of-8 de-multiplexing capability
- Output disabled for input codes above nine
- Simple to deconstruct

General Description

This decoder is based on the 74HC42. It accepts four inputs to provide 10 mutually exclusive outputs (active low). The logic design of this device ensures that all outputs are high when the input's binary weight is above nine.

The most significant input (A3) produces a useful inhibit function when the component is used as a 1-of-8 decoder. The A3 input can also be used as the data input in an 8-output de-multiplexer application.

This component was built as a teaching tool. This classic component's operation is well understood and this datasheet's function is to help understand how the component was built through its deconstruction.

Pin Description

Pin	Type	Function
A0 – A3	Inputs	Data inputs
Y0n – Y9n	Outputs	Decoder outputs

Function Table

Inputs				Outputs									
A3	**A2**	**A1**	**A0**	**Y9n**	**Y8n**	**Y7n**	**Y6n**	**Y5n**	**Y4n**	**Y3n**	**Y2n**	**Y1n**	**Y0n**
0	0	0	0	1	1	1	1	1	1	1	1	1	0
0	0	0	1	1	1	1	1	1	1	1	1	0	1
0	0	1	0	1	1	1	1	1	1	1	0	1	1
0	0	1	1	1	1	1	1	1	1	0	1	1	1
0	1	0	0	1	1	1	1	1	0	1	1	1	1
0	1	0	1	1	1	1	1	0	1	1	1	1	1
0	1	1	0	1	1	1	0	1	1	1	1	1	1
0	1	1	1	1	1	0	1	1	1	1	1	1	1
1	0	0	0	1	0	1	1	1	1	1	1	1	1
1	0	0	1	0	1	1	1	1	1	1	1	1	1
1	0	1	0	1	1	1	1	1	1	1	1	1	1
1	0	1	1	1	1	1	1	1	1	1	1	1	1
1	1	0	0	1	1	1	1	1	1	1	1	1	1
1	1	0	1	1	1	1	1	1	1	1	1	1	1
1	1	1	0	1	1	1	1	1	1	1	1	1	1
1	1	1	1	1	1	1	1	1	1	1	1	1	1

Deconstructing the Component

This component is a good example of how to implement combinatorial logic with a look-up table (LUT). LUTs were the predecessor to programmable logic and are still commonly used in designs. Early implementation was done with off-the-shelf EEPROMs. A 1 Kbyte EEPROM has 10 inputs and 8 outputs. With designs easily represented in a table format, the LUT gives an alternative to designing logic by manipulating Boolean equations and logic gates.

Using PSoC Creator, open the CY42 example project to see the project schematic (*TopDesign.cysch*). It has a CY42 component connected to input switches and output LEDs.

In the Workspace Explorer, click the **Components** tab. Then, right-click on the project and select **Import Component**. Navigate to where the CYCC_SimpleComps library project is, and select the CYCC_CY42_v1_0 component. Click **OK** and the following files are shown for the component:

- Schematic file (cysch)
- Symbol file (cysym)
- Datasheet (pdf)

Open the symbol file to find a symbol with four inputs and 10 outputs. It looks like the symbol shown on the first page. There are no additional symbol parameters.

Open the schematic file to see the following:

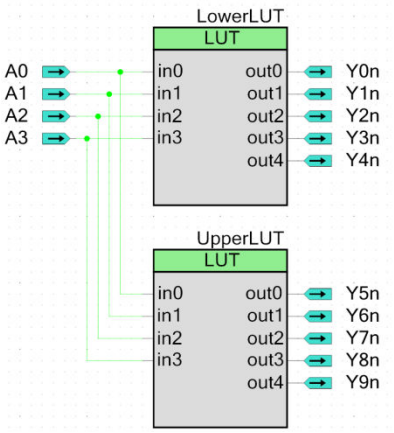

Note that the inputs and output terminal names match those in the symbol. There are two LUTs because the LUT component has a limitation of up to 8 outputs and ten are needed. Open each LUT and you see the following.

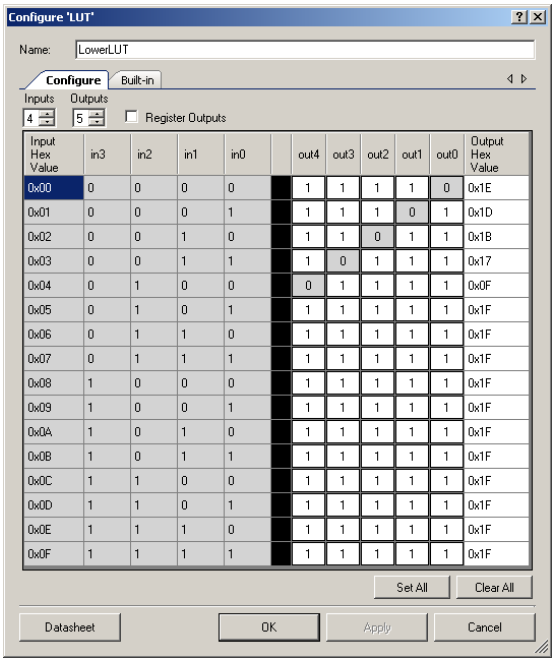

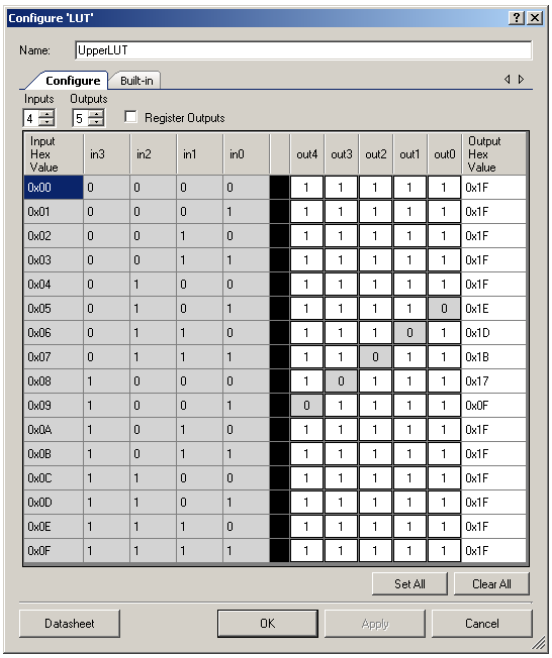

It is apparent how each output behaves as a function of the combination of the inputs. Each LUT is set up for four inputs and five outputs. If the **Register Outputs** box had been checked, these outputs would have been latched and a clock input provided to the symbol.

Support

PSoC Creator Community Components are developed and supported by the Cypress Developer Community. Go to www.cypress.com/CommunityComponents to discuss this and other Community Components.

© Cypress Semiconductor Corporation, 2013. The information contained herein is subject to change without notice. Cypress Semiconductor Corporation assumes no responsibility for the use of any circuitry other than circuitry embodied in a Cypress product. Nor does it convey or imply any license under patent or other rights. Cypress products are not warranted nor intended to be used for medical, life support, life saving, critical control, or safety applications, unless pursuant to an express written agreement with Cypress. Furthermore, Cypress does not authorize its products for use as critical components in life-support systems where a malfunction or failure may reasonably be expected to result in significant injury to the user. The inclusion of Cypress products in life-support systems application implies that the manufacturer assumes all risk of such use and in doing so indemnifies Cypress against all charges.

PSoC® is a registered trademark, and PSoC Creator™ and Programmable System-on-Chip™ are trademarks of Cypress Semiconductor Corp. All other trademarks or registered trademarks referenced herein are property of the respective corporations.

This work is licensed under a Creative Commons Attribution 3.0 Unported License.

http://creativecommons.org/licenses/by/3.0/deed.en_US

You are free to:

- Share — to copy, distribute and transmit the work
- Remix — to adapt the work
- Make commercial use of the work