XMC: 32-bit Microcontrollers designed for Industrial Applications

SPS/IPC/Drives, November 26-28, 2013
Nuremberg, Germany

Gabriela Born
Head of Product Marketing XMC Microcontrollers



Infineon's Microcontroller Portfolio: Dedicated Architecture for Automotive and Industrial

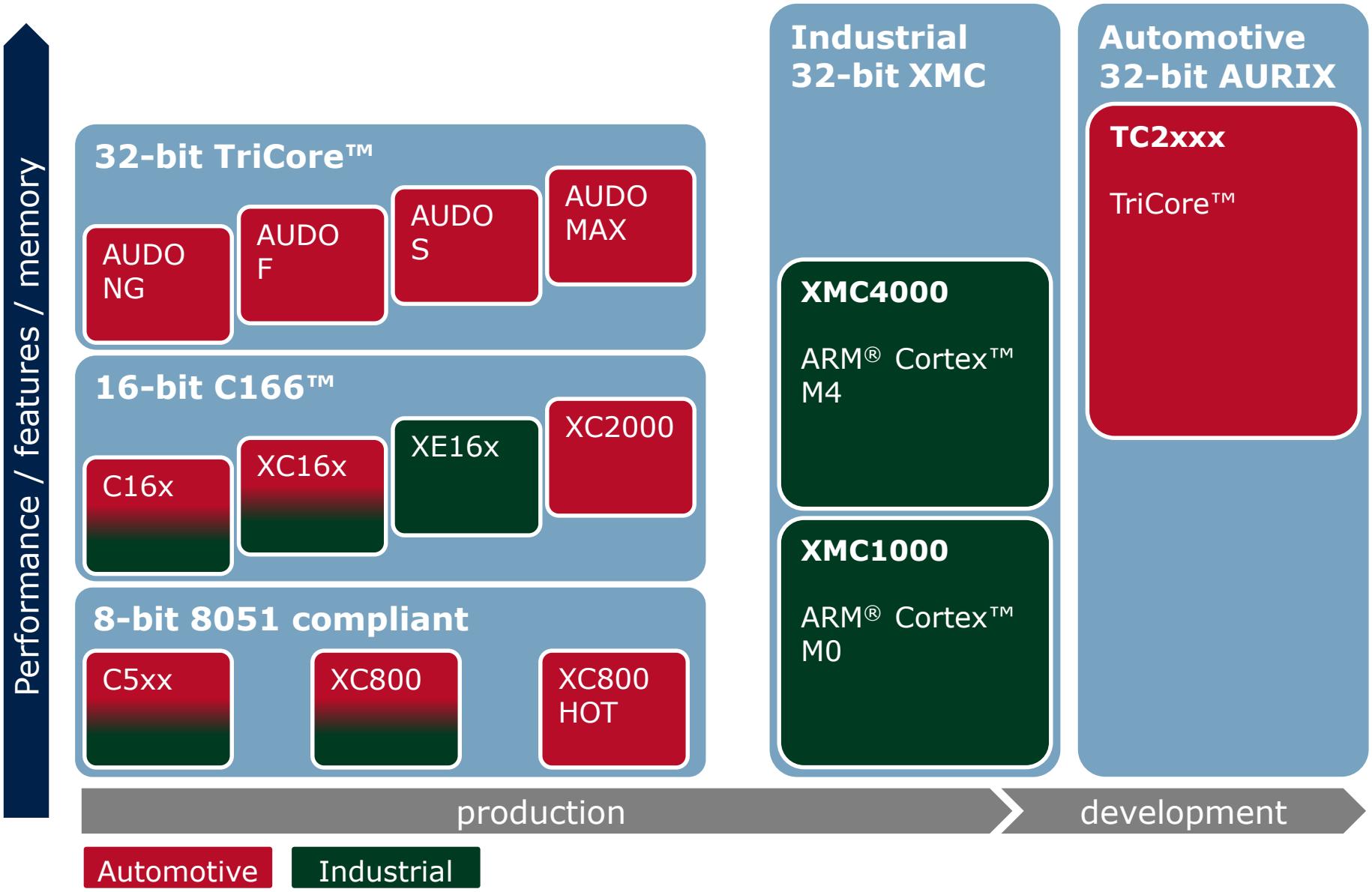

Copyright © Infineon Technologies AG 2013. All rights reserved.

The XMC Family for Industrial Applications: Today's Portfolio

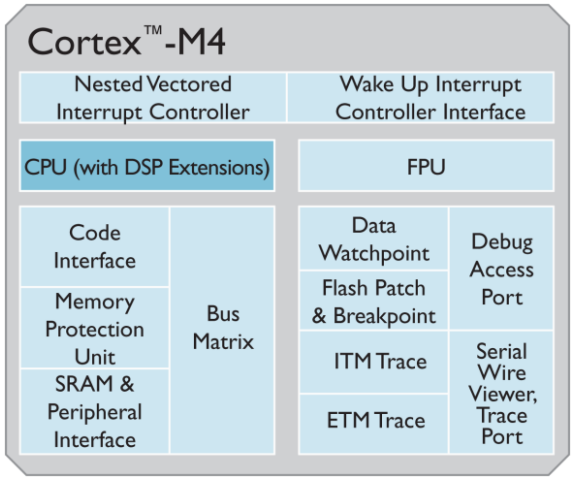

Source: http://www.arm.com/images/Cortex_M4_large.png

Control&Perf XMC4400

Perf Series XMC4500

Basic Series XMC4100

Control Series XMC4200

Cortex™ Low-Power Leadership from ARM

Control Series XMC1300

Basic Series XMC1100

Feature Series XMC1200

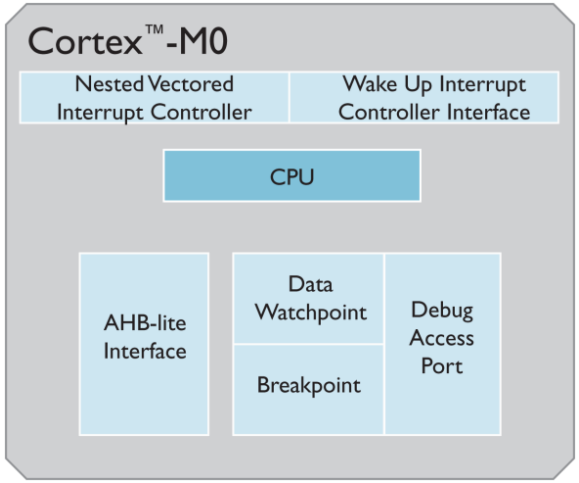

Source: http://www.arm.com/images/Cortex_M0_large.png

Performance

Feature Integration

Copyright © Infineon Technologies AG 2013. All rights reserved.

XMC Key Benefits

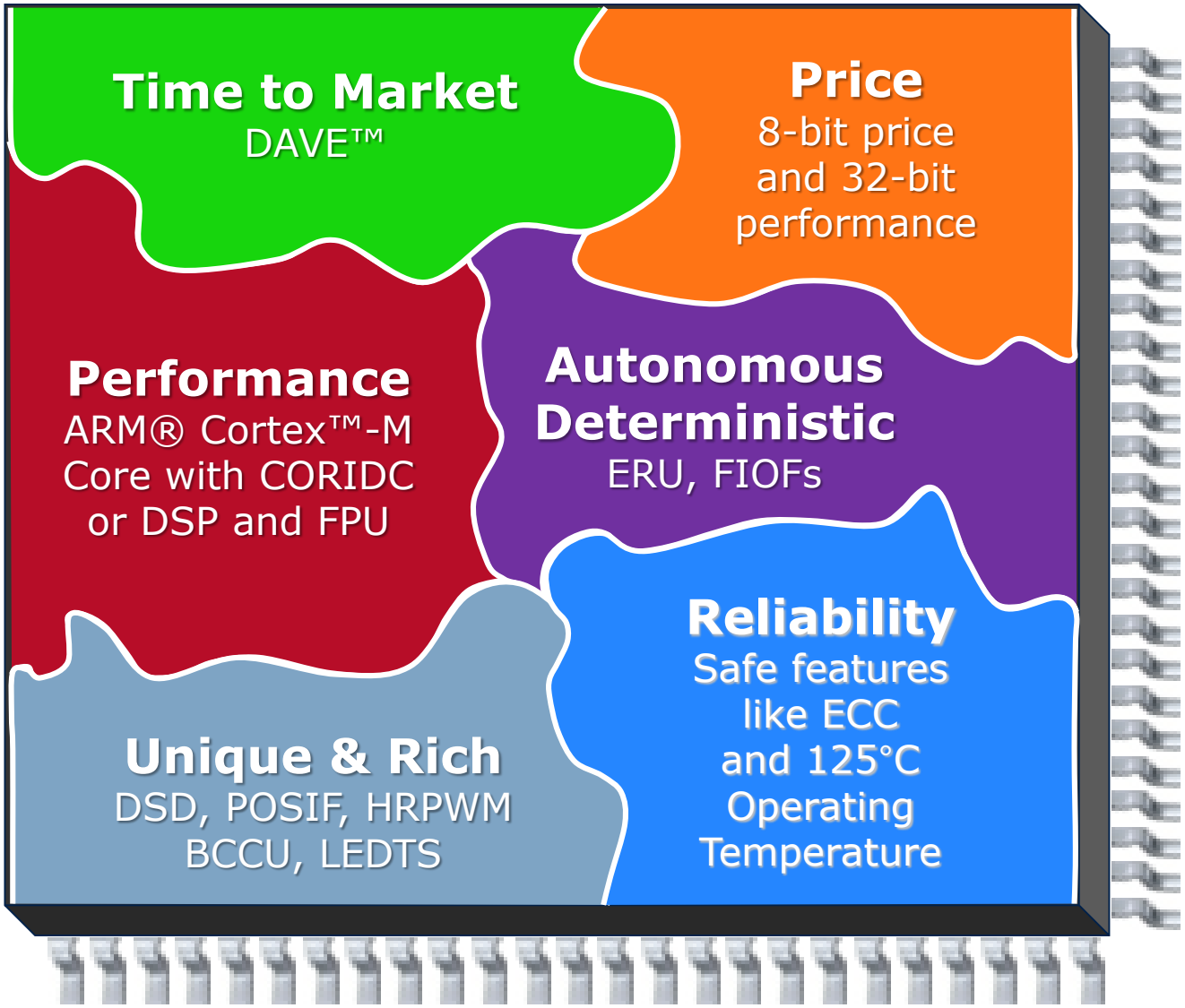

Copyright © Infineon Technologies AG 2013. All rights reserved.

XMC Microcontroller Portfolio Details

Numbers are 'UP TO'. *For all details see Reference Manual.*	**BOLD** indicates major enhancements/changes to the left						
	XMC11x	**XMC12x**	**XM13x**	**XMC41x**	**XMC42x**	**XMC44x**	**XMC45x**
ARM® Processor :	Cortex™-M0			Cortex™-**M4 with built in DSP**			
MHz :	32MHz			**80 MHz**		**120MHz**	
CO-Processor :	-		**CORDIC**	**Floating Point Unit (SPFPU)**			
DMA / MPU :	-			8ch / 8 Regions		8ch / 8 Regions	12ch / 8 Regions
Flash / RAM / Cache [kB] :	8 ~ 200 / 16 / no			128 **~ 256 / 20 ~ 40 / 1**		256 ~ 512 / 80 / 4	512 ~ 1M / 128 ~ 160 / 4
Packages :	16 / 28 /38			**48 / 64**		64 / **100**	100 / **144**
ETH / USB / EBU :	-			no / **FS DEV** / no		**IEEE1588** **/ FS OTG** / no	IEEE1588 / FS OTG / **yes**
CAN / SD/MMC :	-			**2 nodes** / no			**3 nodes / yes**
USIC (UART/LIN, IIC, IIS , Standard-/ Dual- / Quad-SPI**) :**	4ch (2 USICs)			**8ch** (4 USICs)			**12ch** (6 USICs)
HRPWM / DSD / POSIF:	-	-	no / no / **1x**	**1x / no** / 1x		1x / **4x / 2x**	no / 4x / 2x
ADC / DAC :	12ch / no	**12ch (2x Sample) / yes**		9ch (2x Sample) / **2ch**		**26ch (4x Sample) / 4ch**	
CMP :	-	**2x**	**3x**	**see HRPWM (with built in CMPs)**			-
CCU4 / CCU8 :	1x / no		1x / **1x**	**2x** / 1x	2x / 1x	**4x / 2x**	4x / 2x
Touch & LED Display Matrix : **(Lighting) LED Diming :** **(Lighting) LED Color Control :** **Power LED :**	-	yes yes yes yes	- yes yes yes	**8ch Touch** **64 LEDs** - -			
Operating Voltage :	**1.8 ~ 5.5 Volt**			3.13 ~ 3.63 Volt			
Operating Temperature :	-40°C ~ 85°C / 105°C			-40°C ~ 85°C / **125°C**			
Ecosystem & Enablement :	**Infineon DAVE™: FREE Eclipse based IDE, CMSIS and MISRA compliant, GCC with Debugger, DAVE™ APPs Code Generation, open for 3rd Party Tools like KEIL, IAR, ….**						

Copyright © Infineon Technologies AG 2013. All rights reserved.

XMC Key Applications:
From low-end to high-end Industrial Control

XMC4000 Cortex™-M4



XMC1000 Cortex™-M0

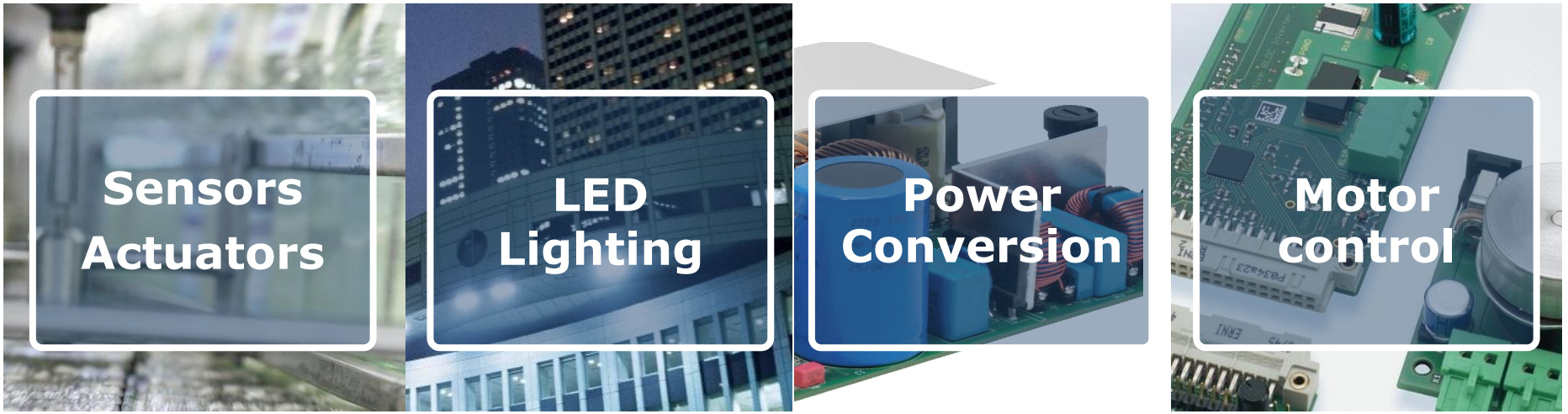

Copyright © Infineon Technologies AG 2013. All rights reserved.

Key Application: Automation and Motor Control

*XMC1000
*XMC4000
Family

Factory- / Building- / Home Automation and Motor Control

- Drives, Motion Control
- Sense, Detection
- Digital Power

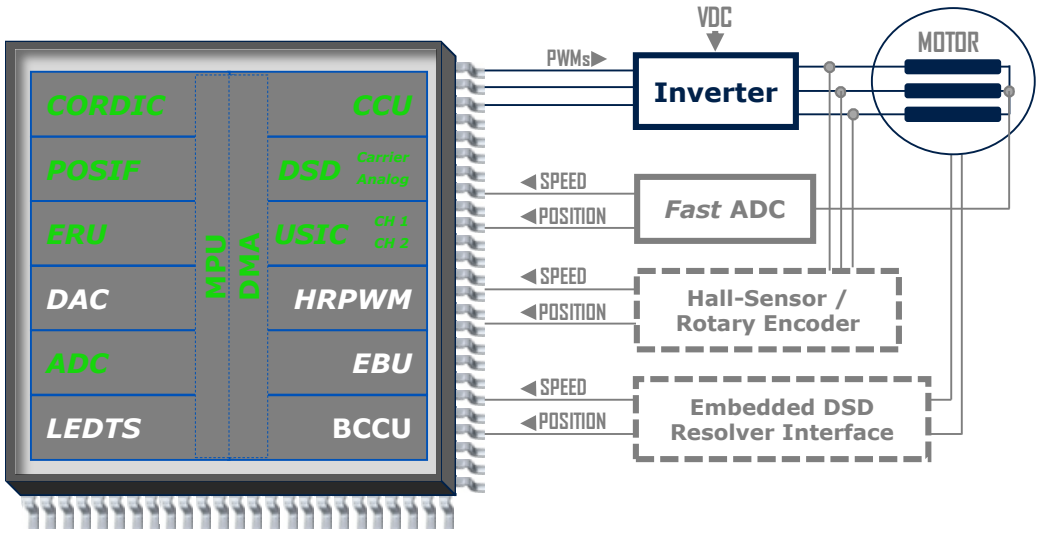

Infineon's USPs

- Calculation:
  - CORDIC Co-Processor
  - Floating Point Unit
- Resolution and performance: 64-bit, 64MHz/120MHz timers, fast 12-bit ADC
- Deterministic, parallel execution, real-time: ERU and DMA**
- Functional safety: MPU, ECC, built-in diagnostic, 125 °C ambient
- BOM cost Reduction: POSIF and DSD

Copyright © Infineon Technologies AG 2013. All rights reserved.

CORDIC – Coprocessor to Enable Complex Arithmetic Operations

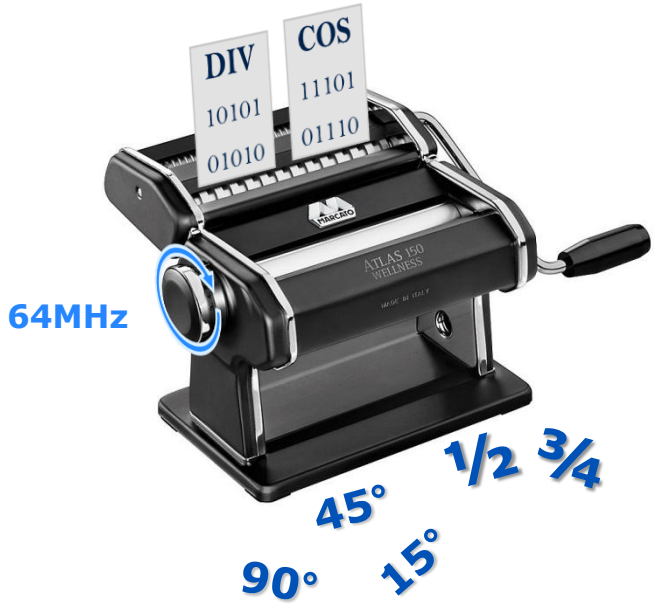

Performance Benchmark

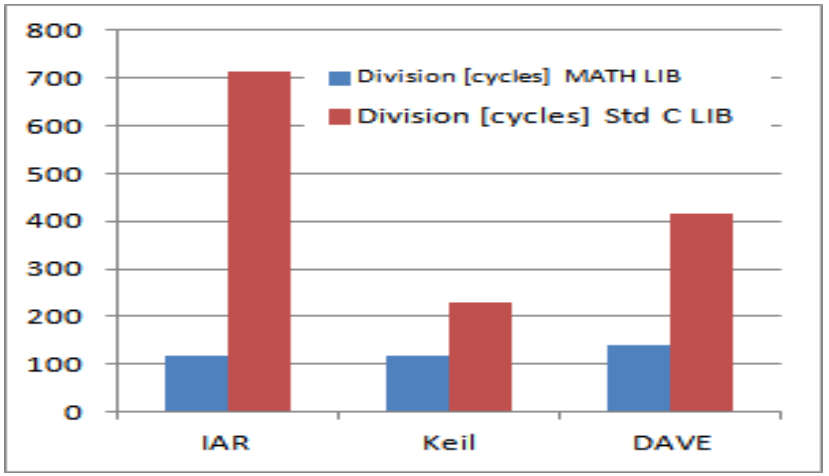

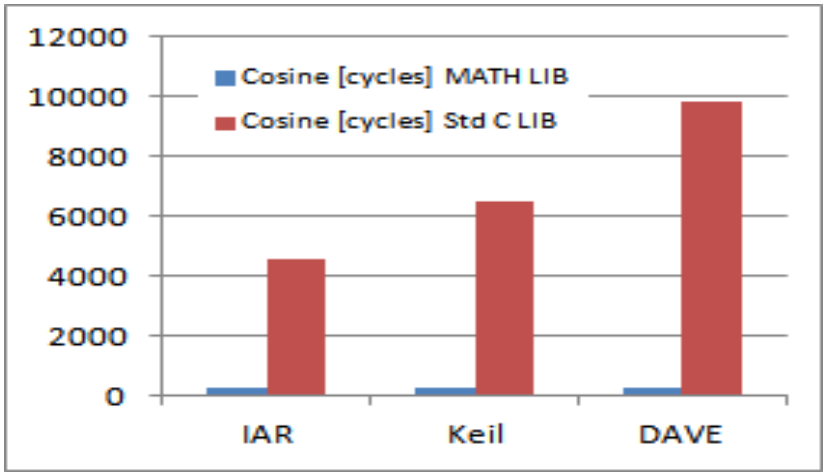

Note: MATH LIB is utilizing CORDIC
Std LIB is just ARM® standard

Highlights

- The math co-processor provides
  - 32bit signed or unsigned divider
  - 24bit CORDIC for trigonometric calculations (sin, cos, arctan)
- DIVIDER and CORDIC can operate in parallel next to the CORTEX-M0 CPU core

Copyright © Infineon Technologies AG 2013. All rights reserved.

Key Application: LED Lighting

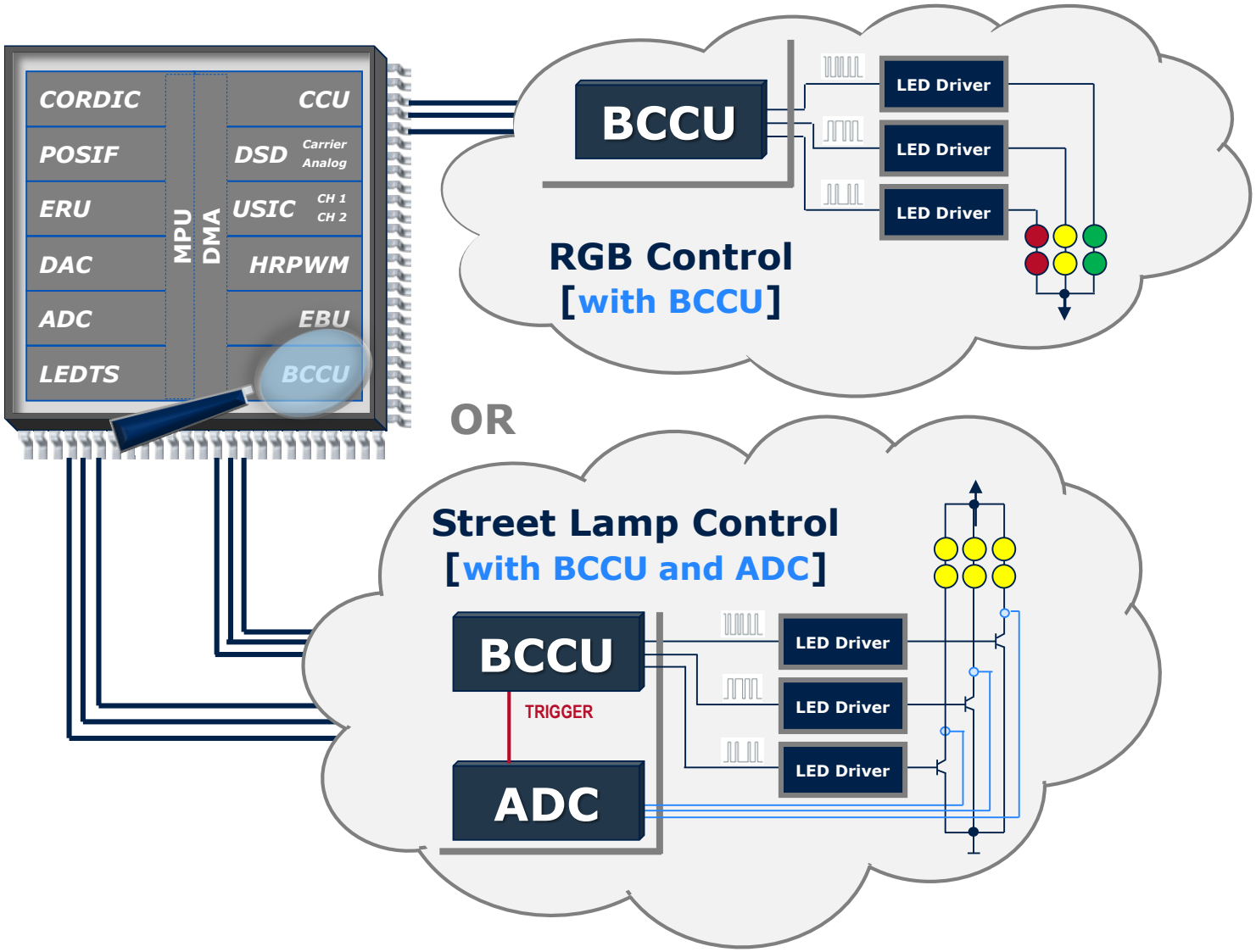

Copyright © Infineon Technologies AG 2013. All rights reserved.

ERU – Real-Time and Parallel Execution

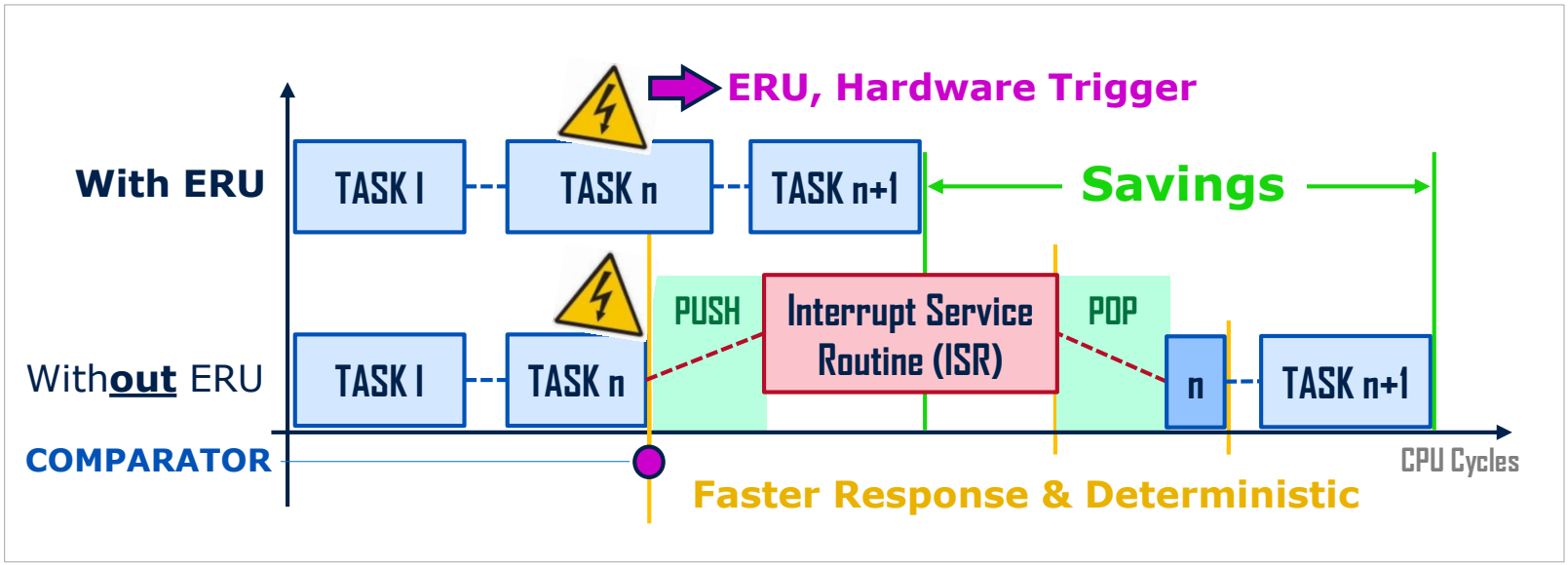

EXAMPLE / USE CASE

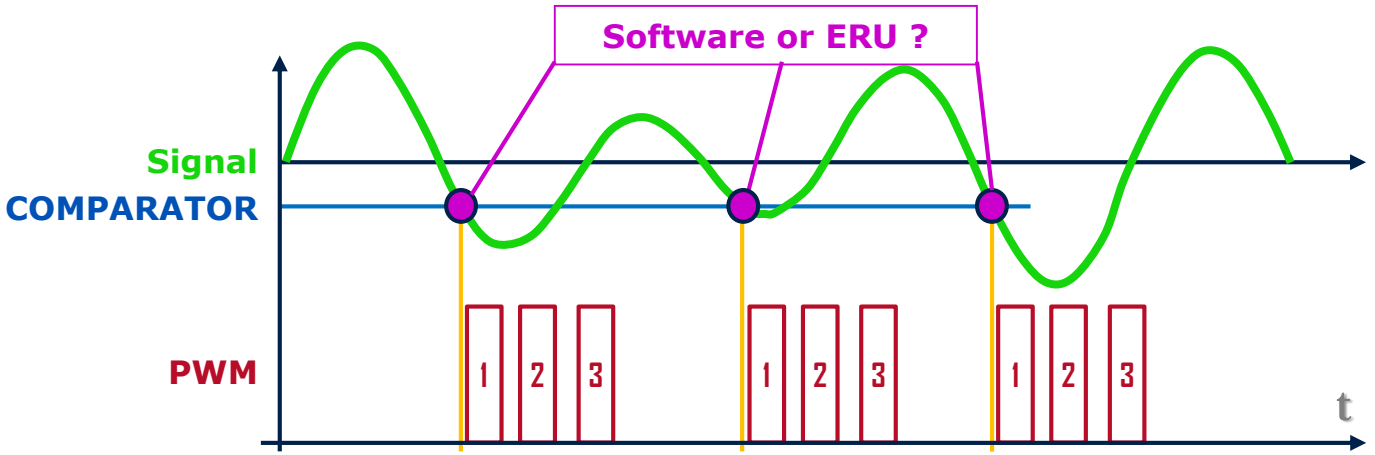

Copyright © Infineon Technologies AG 2013. All rights reserved.

DAVE™ – Free Tool Chain, open to the ARM® Ecosystem

IEC60730 Class B software library: free-of-charge, VDE-certified SW routines for self-diagnostic and supervisory functions

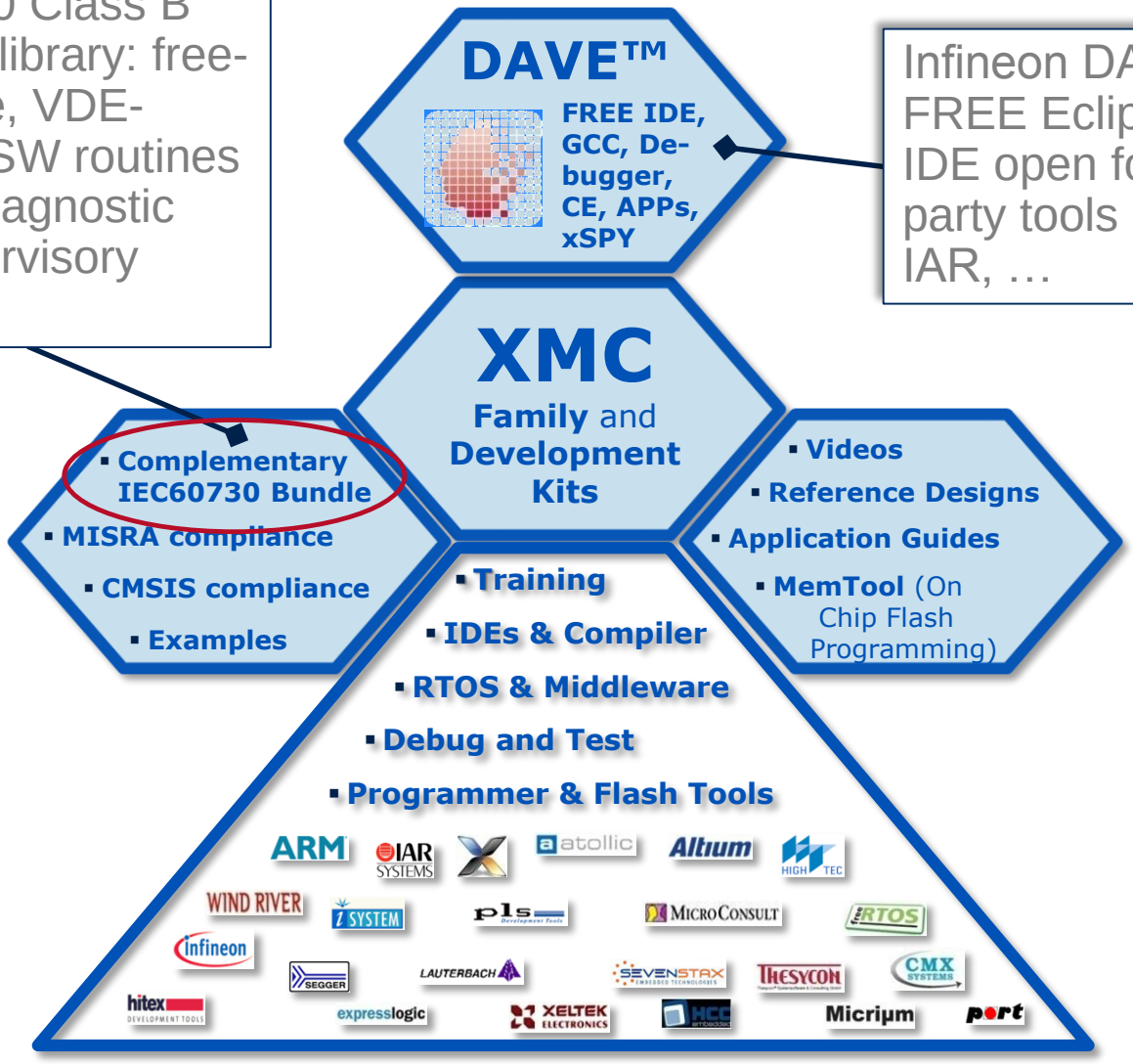

Infineon DAVE™: FREE Eclipse-based IDE open for 3rd party tools like KEIL, IAR, …

Copyright © Infineon Technologies AG 2013. All rights reserved.

XMC 750 Watt Motor Control Application Kit

- The XMC 750 Watt Motor Control Application Kit is a ready-made evaluation kit for 3-Phase drives of up to 750 Watt
- This kit suits best to customers asking to experience XMC microcontrollers, the DAVE™ Motor Control Apps library and the new 750 Watt power board with their own motor
- It includes the XMC1300 and XMC4400 Drive Cards with galvanic isolation



- The power board includes off-the-grid supply with input filter, active PFC and the 3-phase inverter bridge built on the broad Infineon power product portfolio including PFC IC, silicon carbide diode, gate driver and IGBTs
- The XMC 750 Watt Motor Control Application Kit is supported by the DAVE™ Motor Control Apps library

Copyright © Infineon Technologies AG 2013. All rights reserved.

ENERGY EFFICIENCY
MOBILITY
SECURITY

Innovative semiconductor solutions for energy efficiency, mobility and security.



