EiceDRIVER™ update
SPS Drives 2013, Nuremberg

Dr. Oliver Hellmund, Business Manager Driver ICs

November 26-28, 2013

EiceDRIVER™ update

- Overview EiceDRIVER™ inside applications
- 1EDI Compact – the new powerful single channel driver, 1200V
- 2EDL Compact – the level-shift halfbridge driver, 600V
- Summary
- Application example SMPS

Copyright © Infineon Technologies AG 2013. All rights reserved.

EiceDRIVER™ ICs and Boards Product Segments

Features/ Channel

DESAT Protection, TLTO, SOFF, VCEsat Detection, …

Active Miller Clamp, Enable, Fault, OCP, ASD, …

Integr. Bootstrap, Deadtime, Interlock, UVLO, …

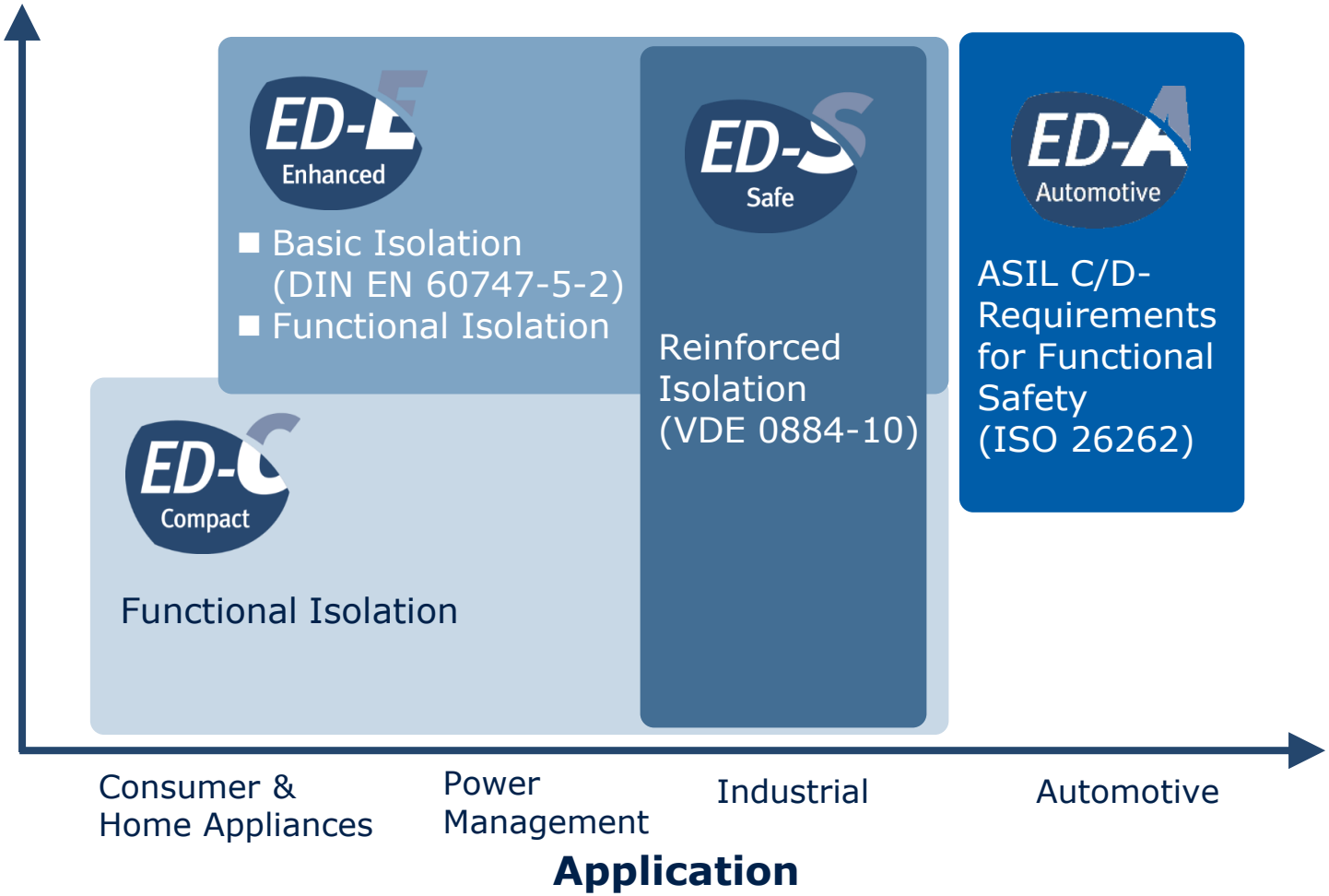

EiceDRIVER™ ICs and boards are driving the whole range of power applications with its high efficient Coreless Transformer and Level-Shift technologies

Copyright © Infineon Technologies AG 2013. All rights reserved.

EiceDRIVER™ IC Terminology

Isolated Single-Channel

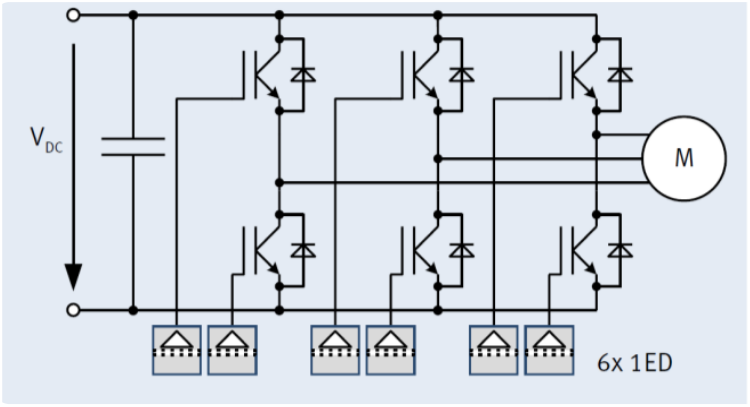

Isolated Dual-Channel

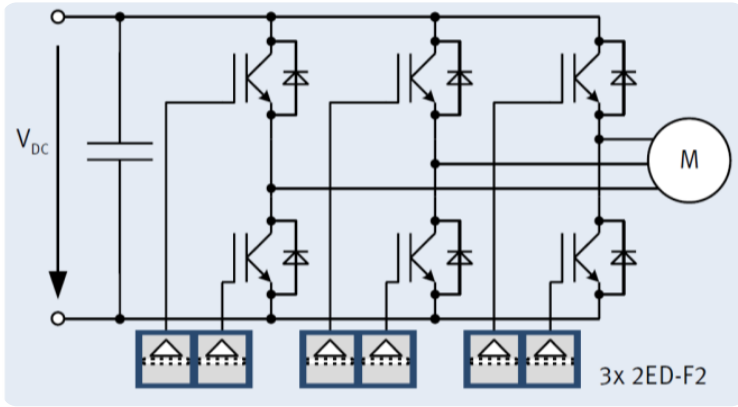

High-Side Isolated Half-Bridge (HB)

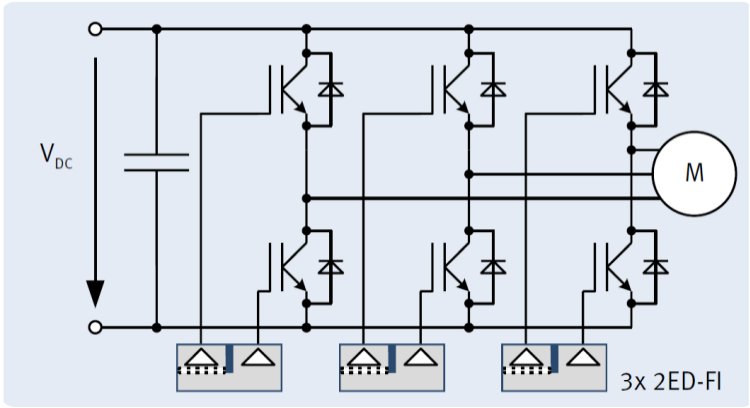

Level-Shift 3~ Bridge (resp. LS-HB)

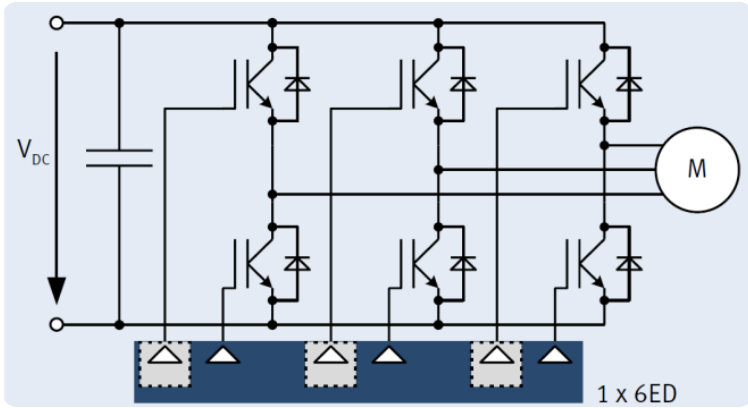

Level shift circuit | Chip boundary | Galvanic isolation | Driver Output Buffer

Copyright © Infineon Technologies AG 2013. All rights reserved.

EiceDRIVER™ Compact new portfolio

EiceDRIVER™ IC Family	3~ Driver ICs:	New! Half-bridge Driver ICs:		Single Channel ICs: New!
	6EDL-Compact	2EDL-Compact	2ED-Enhanced	1EDI-Compact
Sales Codes	6ED003L02-F2 6EDL04N02PR 6ED003L06-F2 6EDL04I06NT 6EDL04I06PT 6EDL04N06PT	2EDL05I06BF (0.5A, for IGBT) 2EDL05I06PF (0.5A, for IGBT) 2EDL05I06PJ (0.5A, for IGBT) 2EDL05N06PF (0.5A, for IGBT) 2EDL05N06PJ (0.5A, for MOS) 2EDL23I06PJ (2.3A, for IGBT) 2EDL23N06PJ (2.3A, for MOS)	2ED020I06-FI 2ED020I12-FI	1EDI05I12AF (0.5A, for IGBT) 1EDI10I12MF (1.0A, for IGBT) 1EDI20I12AF (2.0A, for IGBT) 1EDI20I12MF (2.0A, for IGBT) 1EDI30I12MF (3.0A, for IGBT) 1EDI40I12AF (4.0A, for IGBT) 1EDI60I12AF (6.0A, for IGBT) 1EDI60N12AF (6.0A, for MOS)
Voltage Class	200V/600V	600V	600V/1200V	1200V
Technology	Level Shift-SOI	Level Shift-SOI	Coreless Transforme	Coreless Transformer

Applications				
Server high end, low end				✓
PFC				✓
Consumer	✓	✓	✓	✓
Commercial Agricultural Vehicles		✓		✓
Induction Cooking		✓	✓	✓
Servo Drives	✓	✓		✓
Solar Inverters			✓	✓
Power tools	✓	✓		✓
UPS Bridge			✓	✓
Welding		✓	✓	✓
Major Home Appliance	✓	✓	✓	✓

See also EiceDRIVER™ Enhanced portfolio

EiceDRIVER™ Compact covers 99% of power applications up to 1200V

Copyright © Infineon Technologies AG 2013. All rights reserved.

1EDI Compact is ideal for all IGBT Power Modules up to 1200V or CoolMOS™ 650V

- Separate source/sink output (Vsupply: 35V)
- Iout: **0.5A, 2A, 4A, 6A** @ 15V
- UVLO for IGBT and MOSFET (6A)

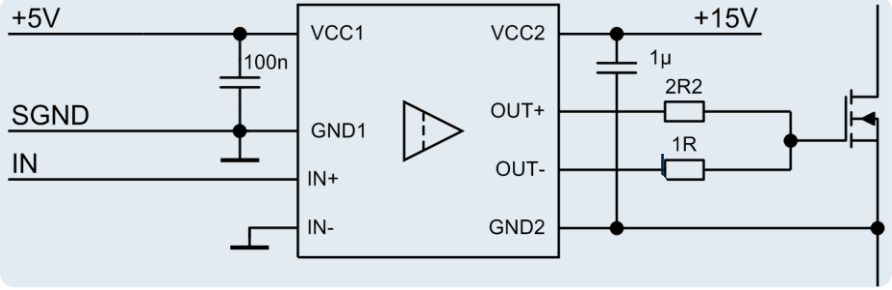



Applications



Features

- 1200V Coreless Transformer IC with galvanic isolation
- MOSFET: Prop. delay <105ns with 40ns input filter time
- High CMTI robustness >100kV/µs
- Separate source/sink output
- Small package DSO-8 150mil

Customer Benefits

- Tailored for all 600V, 650V and 1200V IGBT Power Modules as well as all 650V CoolMOS™
- High switching frequency applications as SMPS, up to 4MHz
- Ideal f. CoolMOS™ C7 3-/4-pin, P6
- Tune turn-off vs. turn-on
- High reliability @ small footprint

Copyright © Infineon Technologies AG 2013. All rights reserved.

1EDI Compact with best in class Common Mode Transient Immunity (CMTI)

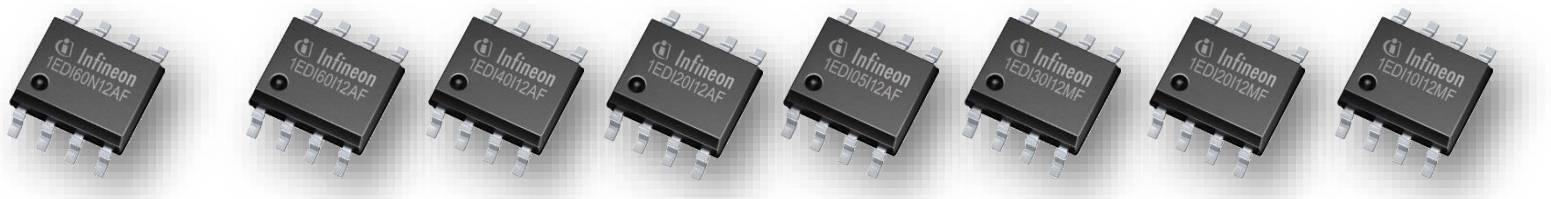

Sales Code	1EDI60N12AF	1EDI60I12AF	1EDI40I12AF	1EDI20I12AF	1EDI05I12AF	1EDI30I12MF	1EDI20I12MF	1EDI10I12MF
Package	DSO-8 (150mil)	DSO-8 (150mil)				DSO-8 (150mil)		
Applications	SMPS, PFC, telecom, server, solar, buck/boost converter, PC power	General purpose inverter (GPI), drives (general purpose & servo), welding, IH industrial and cooking, solar inverter, UPS				General purpose inverter (GPI), industrial drives, welding, IH industrial, solar inverter, UPS		
Voltage class	up to 1200V	up to 1200V				up to 1200V		
Output Current	6 A / -6 A	6 A / -6 A	4 A / -4 A	2 A / -2 A	0.5 A / -0.5 A	3 A / -3 A	2 A / -2 A	1 A / -1 A
Separate source / sink output	✓	✓	✓	✓	✓	-	-	-
Active miller clamp	-	-	-	-	-	✓	✓	✓
UVLO	**MOSFET**	**IGBT**				**IGBT**		
Propagation delay	105ns	300ns				300ns		
Max. switching frequency	4 MHz	1 MHz *)				1 MHz *)		
Recommendation	CoolMOS™ C7 **), CP	TRENCHSTOP™ 5				TRENCHSTOP™ 5		
Samples	**ES available**	**ES available**	ES in Q1 2014			ES in Q1 2014		
Supply	March 2014	March 2014	Q2 2014			Q2 2014		

For all:
- **Common Mode Transient Immunity (CMTI): 100kV/µs (best in class)**
- **Wide Input Operation Range (3 .. 17V)**
- **Benefit: no voltage/signal adaptation between µC and Driver necessary**

*) do not exceed max. power dissipation

**) 1EDI60N12AF enables an extra 0.5% efficiency by reducing inductance losses

Copyright © Infineon Technologies AG 2013. All rights reserved.

Different variants of 1EDI Compact

Variant with separate source/sink output

Circuit Diagram for CoolMOS™ C7

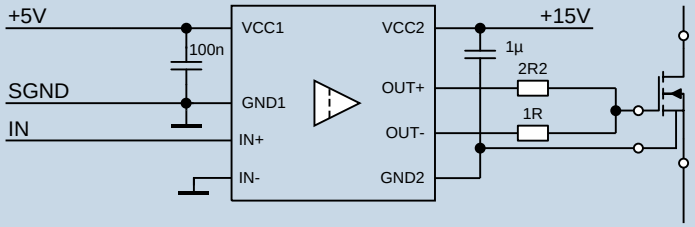



Circuit Diagram for IGBT (optional w. bipolar supply)

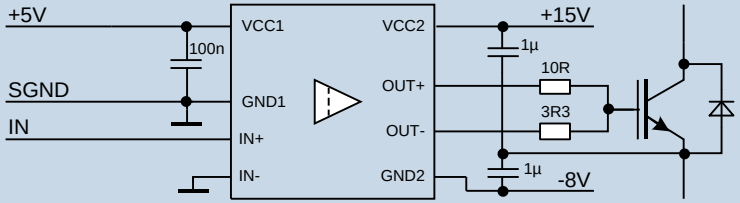

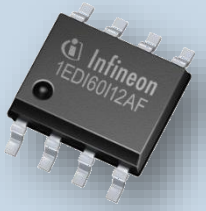

Variant with output and active Miller Clamp

Circuit Diagram for IGBT, unipolar (e.g. with TRENCHSTOP™ 5)

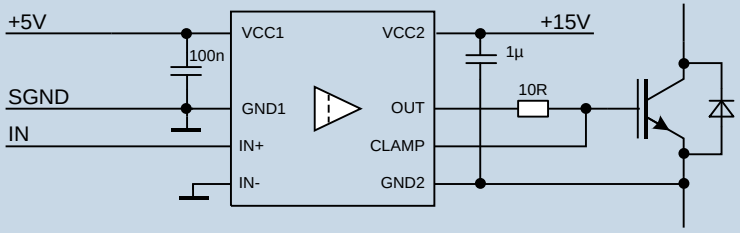

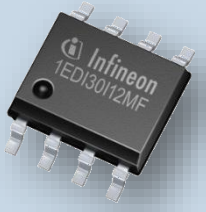

Copyright © Infineon Technologies AG 2013. All rights reserved.

EiceDRIVER™ 2EDL Compact for all consumer and low end industrial equipment

- Iout: **0.5A, 2.3A**
- UVLO for IGBT and MOSFET

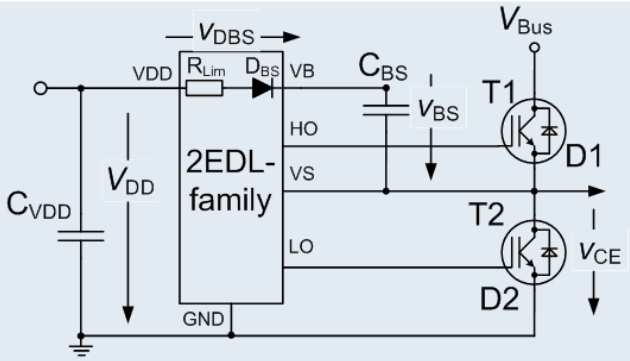

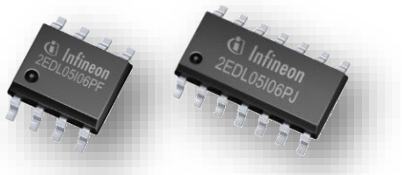

Applications



Features

- 600V level-shift SOI halfbridge driver IC
- Integrated low-ohmic ultrafast bootstrap diode
- Specific undervoltage lockout levels for IGBT, OptiMOS™ and CoolMOS™
- Efficient levelshifting up to 250 kHz
- Overcurrent prot., Enable, Fault-out

Customer Benefits

- No latch up
- System BOM advantage through integrated BS Diode
- Optimal controllability of application
- Low area consumption

Copyright © Infineon Technologies AG 2013. All rights reserved.

EiceDRIVER™ 2EDL Compact offers most protection and control features

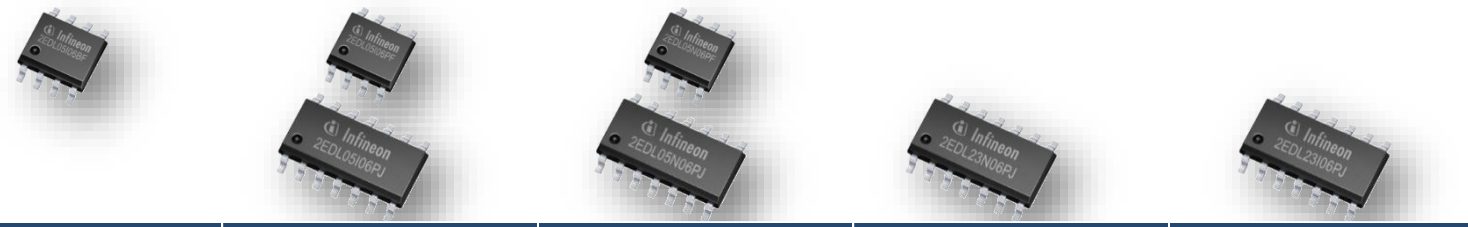

Sales Code and Package (150mil)	2EDL05I06BF (DSO-8)	2EDL05I06PF (DSO-8) 2EDL05I06PJ (DSO-14)	2EDL05N06PF (DSO-8) 2EDL05N06PJ (DSO-14)	2EDL23I06PJ (DSO-14)	2EDL23N06PJ (DSO-14)
Applications	Switched reluct. motor drive, TTF, PFC	Fans, pumps, MHA, GP drives (GPI) *DSO-14:* Industrial	TV, LV-drives, PC, e-bike, adapter (SMPS), battery *DSO-14:* server/telecom	Multi-oven IH cookers, fans, pumps, drives	TV, adapter (SMPS), server/telecom, PC, e-scooter, forklift, battery
Voltage Class	600V			600V	
Output	0.25 A / -0.5 A			1.8A / -2.3A	
Integr. Bootstrap Function	Ultrafast low-ohmic Bootstrap (40 Ω)			Ultrafast low-ohmic Bootstrap (27Ω)	
UVLO (latest turn-off)	IGBT (10.9 V)		MOSFET (7.5 V)	IGBT (10.9 V)	MOSFET (7.5 V)
Features	No deadtime, no interlock, active shut down	Deadtime, interlock, active shut down		Deadtime, interlock, enable, fault, overcurrent protection, active shut down	
Samples	ES in DSO-8 available			ES available	
Supply	DSO-8: Dec. 2013	DSO-8: Dec. 2013 DSO-14: Q1 2014	DSO-8: Dec. 2013 DSO-14: Q1 2014	DSO-14: Q1 2014	DSO-14: Q1 2014

The 2EDL Compact for half-bridge is driving IGBTs and MOSFETs with several benchmark features as its low-ohmic ultrafast bootstrap diode

Copyright © Infineon Technologies AG 2013. All rights reserved.

Product Roadmap EiceDRIVER™ ICs

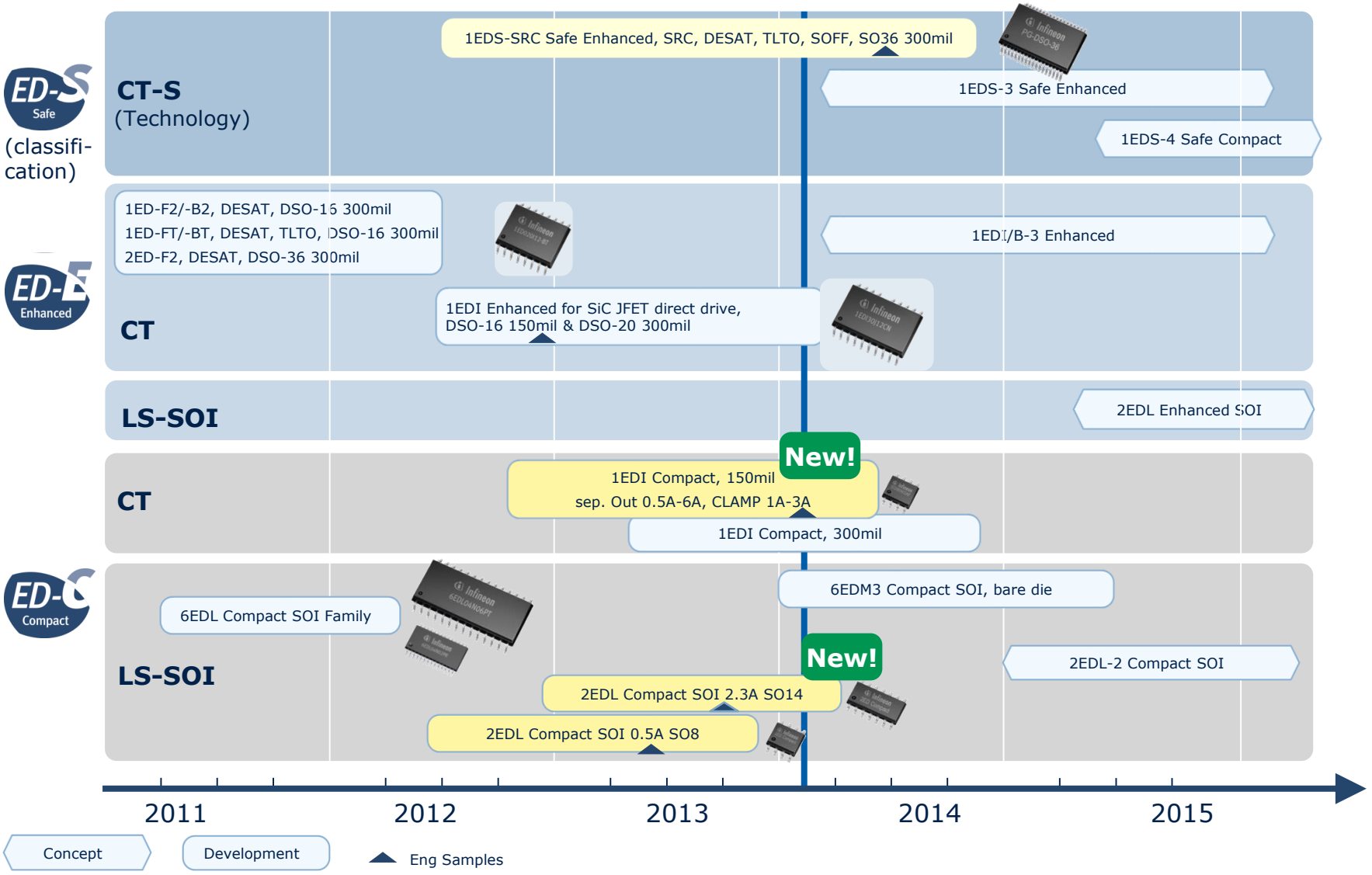

Copyright © Infineon Technologies AG 2013. All rights reserved.

Summary and Key Message

Summary

The **P2S** approach of switches and EiceDRIVER™ ICs is the key success factor for highest efficiency at our customers applications.

- We propose our new 1EDI & 2EDL Compact driver families:
  - **1EDI Compact:** Tailored for IGBT and CoolMOS™.
  - **2EDL Compact:** Cost optimized and ease of use solution with OptiMOS™, CoolMOS™ and IGBT for Power Management, Consumer & Home Appliance.
- With Infineon's new EiceDRIVER™ Compact portfolio 99% of power applications up to 1200V can be supported.

EiceDRIVER™ IC together with Infineon's CoolMOS™, OptiMOS™ and IGBT **are right system approach for customers' applications**

Copyright © Infineon Technologies AG 2013. All rights reserved.

1EDI-C family for professional Server and 2EDL-C family for low end SMPS applications



Copyright © Infineon Technologies AG 2013. All rights reserved.

EiceDRIVER™ IC manage the geometric reality of power layouts

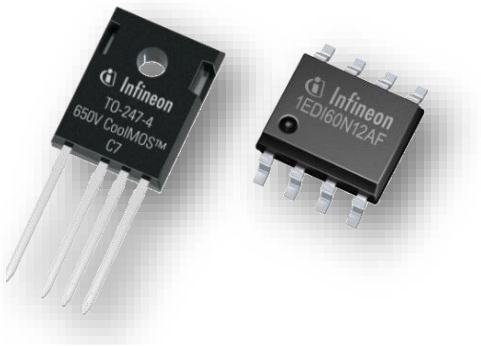

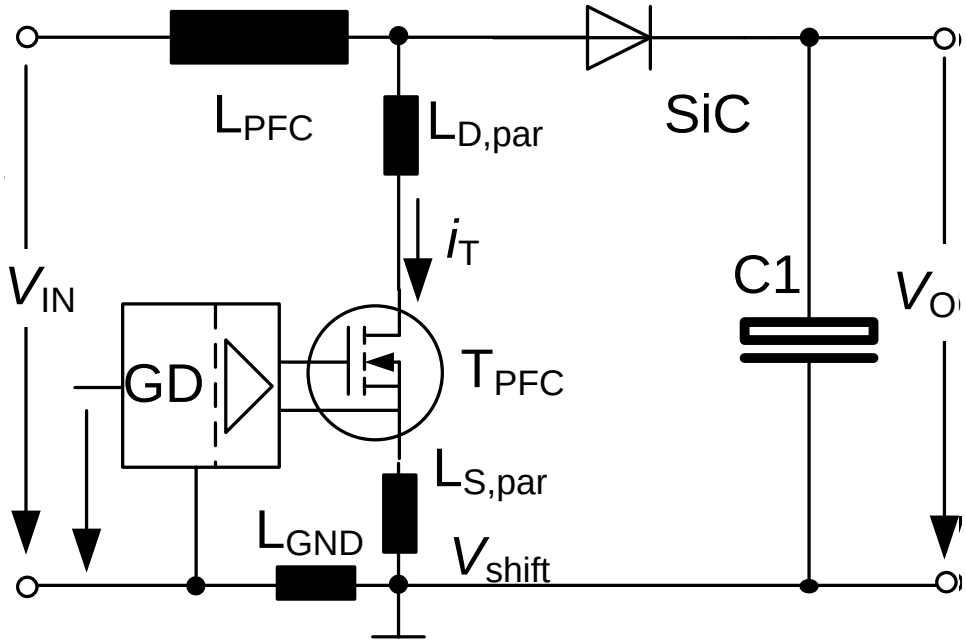

- Parasitic inductances everywhere!
  Drain, source, GND…
- Especially Source-inductance is responsible for slow switching speed
- Solution: separate power path from gate path → 4-pin device
- But $L_{S,par}$ causes GND shift between input and output of gate control → wrong trigger
- Suitable gate drive is mandatory for full performance

1EDI60N12AF and 2EDL23N06PJ provide robust and noise tolerant outputs

Copyright © Infineon Technologies AG 2013. All rights reserved.

EiceDRIVER™ simplifies design and layout of 4-Terminal power transistors

- **1EDI Compact and 2EDL23N60PJ**
- Competition: Other isolated gate drivers from SiLabs, TI, Avago
  or
  levelshifted gate drivers with PGND from IR, Fairchild
  or
  pulse transformer, push-pull
- To be used with CoolMOS™ in TO-247-4 or thinPAK

- **Why should customers use EiceDRIVER™?**
- EiceDRIVER™ 1EDI Compact and 2EDL are robust against ground bounce caused by high di/dt, e.g. CoolMOS™ C7 in thinPAK and TO-247-4
- 1EDI Compact provide sufficient driving capability up to 6A peak in high end
- 2EDL-family reduces system cost

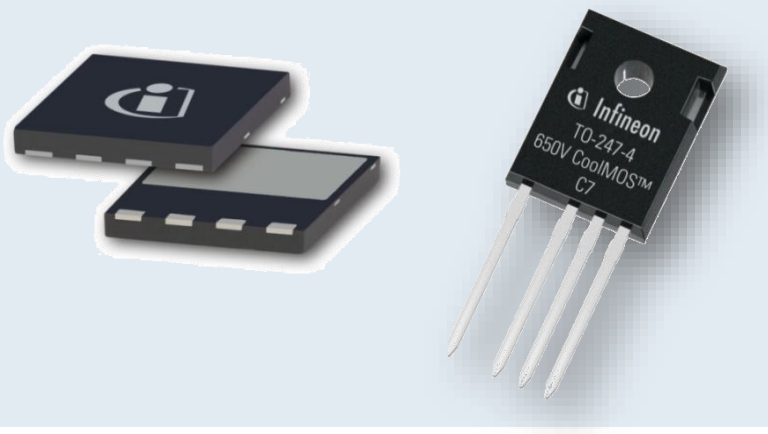

Copyright © Infineon Technologies AG 2013. All rights reserved.

ENERGY EFFICIENCY
MOBILITY
SECURITY

Innovative semiconductor solutions for energy efficiency, mobility and security.



