

Value proposition and portfolio extension of CoolGaN™

Gerald Deboy, Distinguished Engineer

PCIM 2023

Major growth in SiC utilization is driven by automotive applications and Renewable Energy

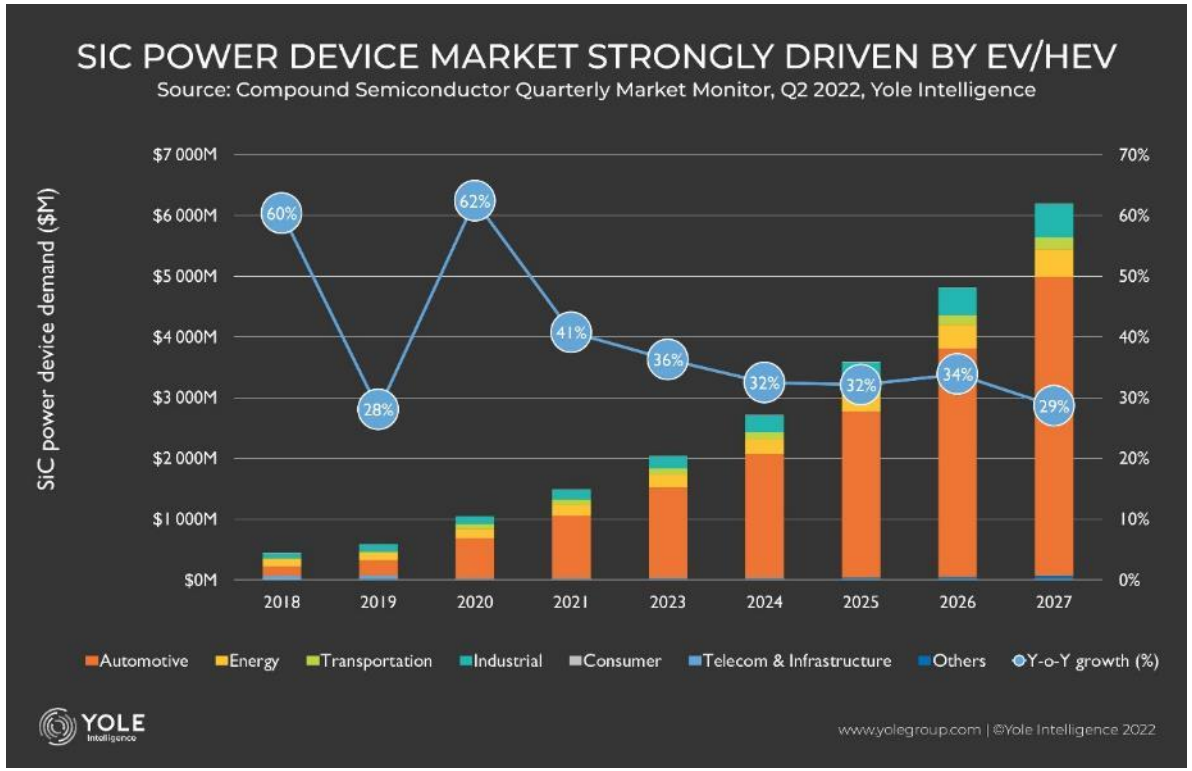

Source: Claire Troadec, "GaN and SiC power devices Market overview", SCAPE Conference, May 2022

Copyright © Infineon Technologies AG 2023

Major growth in GaN utilization will come from mobile phone chargers and telecom/datacenter use cases

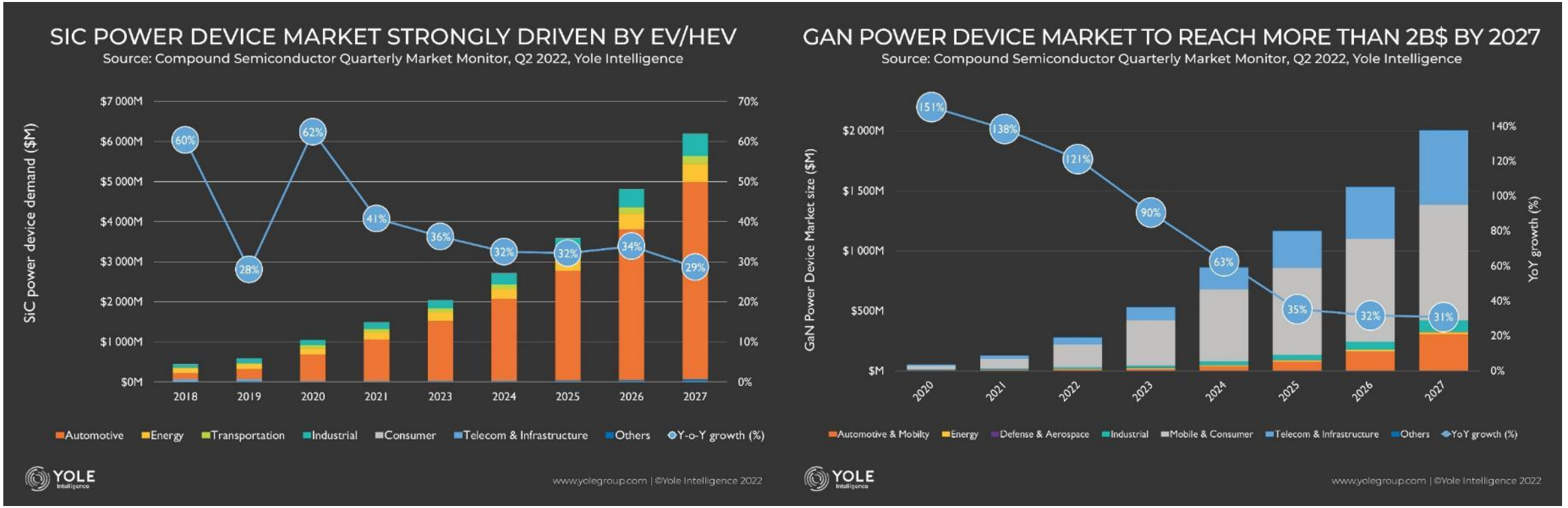

Source: Claire Troadec, "GaN and SiC power devices Market overview", SCAPE Conference, May 2022

Copyright © Infineon Technologies AG 2023

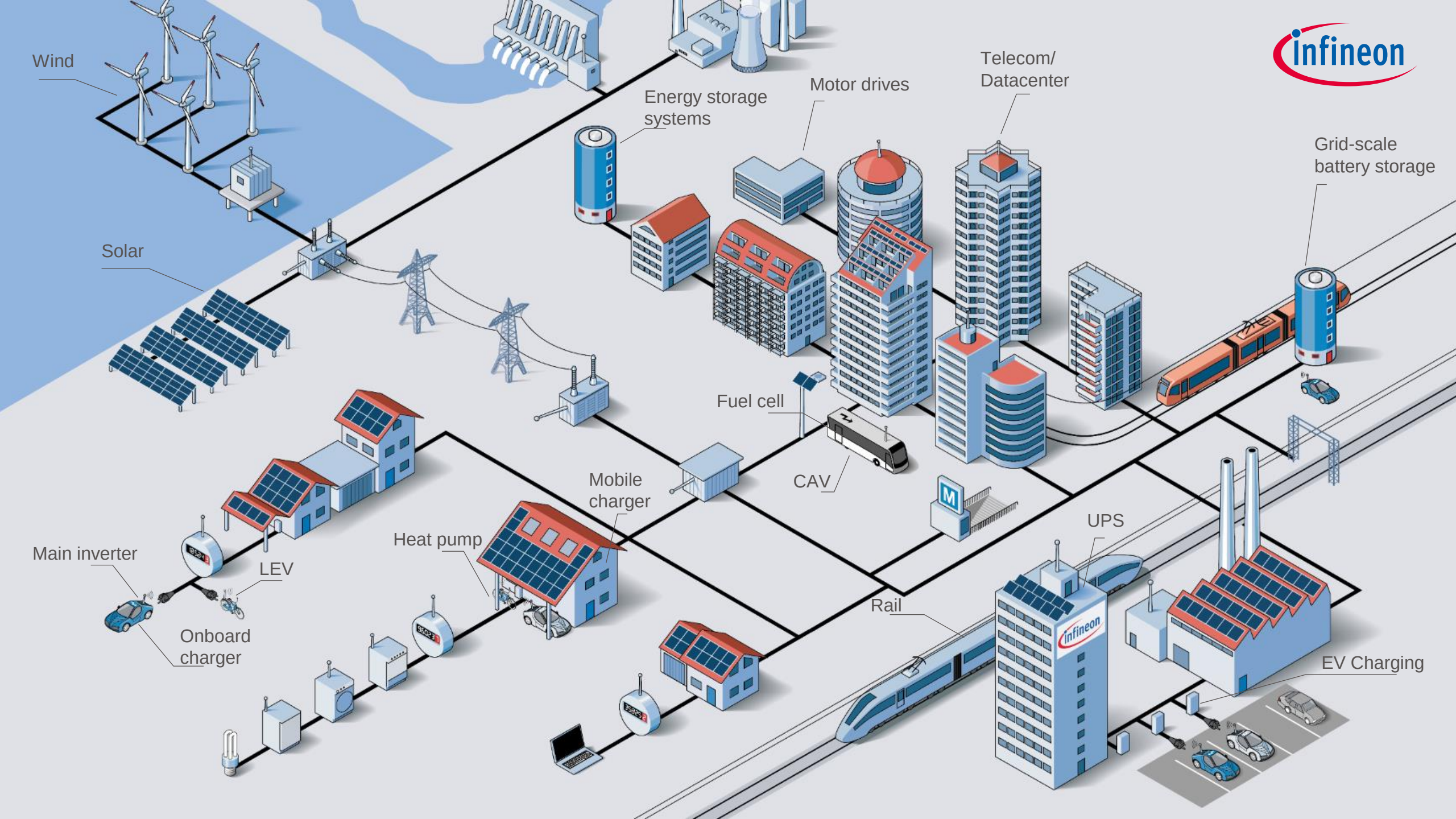
Wind
Solar
Energy storage systems
Motor drives
Telecom/ Datacenter
Grid-scale battery storage
Fuel cell
CAV
Mobile charger
Heat pump
Main inverter
LEV
Onboard charger
Rail
UPS
EV Charging
infineon

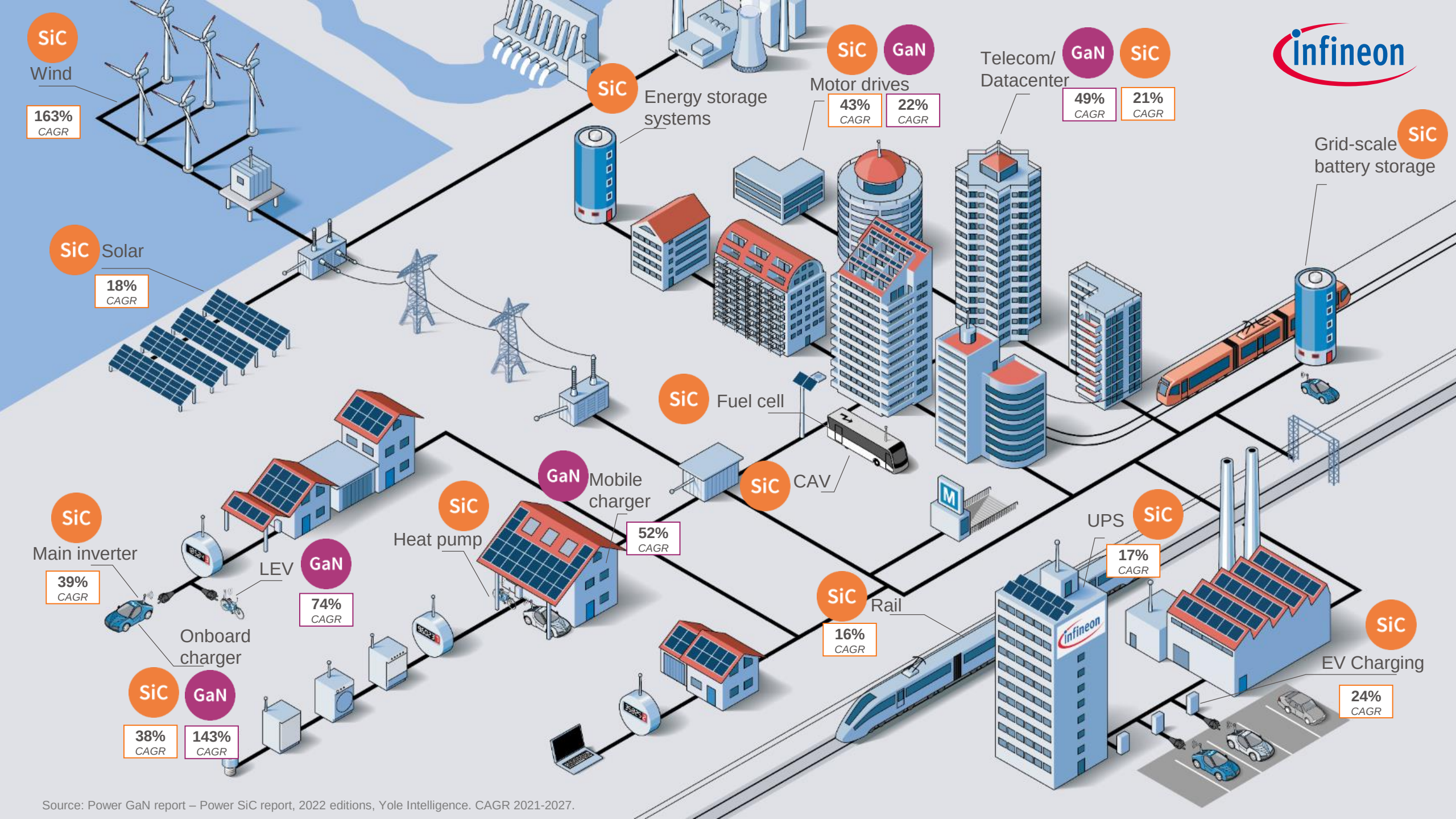

Source: Power GaN report – Power SiC report, 2022 editions, Yole Intelligence. CAGR 2021-2027.

Infineon complements each of its leading-edge silicon solutions with a wide band-gap technology covering 100 V to 2 kV ratings

OptiMOS™ power MOSFETs

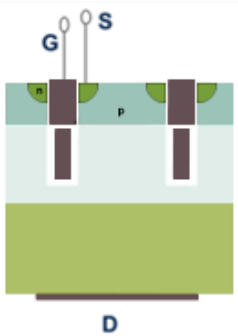

Si fieldplate

CoolMOS™ SJ MOSFETs

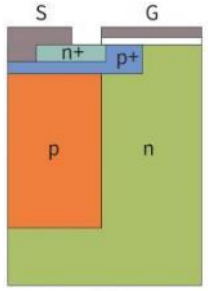

Si Superjunction

TRENCHSTOP™ IGBTs

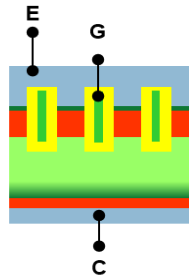

Si IGBT

CoolGaN™ SG HEMTs

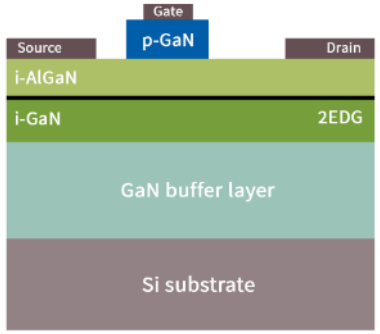

GaN MV e-mode lateral HEMT

CoolGaN™ GIT HEMTs

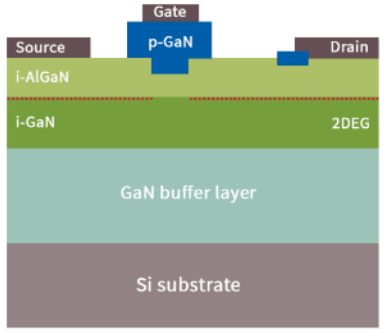

GaN HV e-mode lateral HEMT

CoolSiC™ MOSFETs

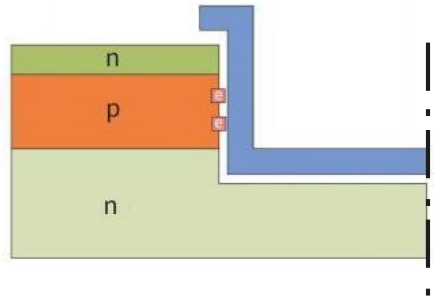

SiC MOSFET

Copyright © Infineon Technologies AG 2023. All rights reserved.

Si Superjunction will prevail at low switching frequencies, SiC and GaN will conquer novel topologies and high-frequency space

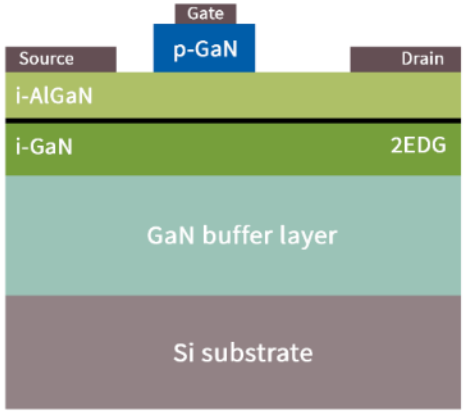

CoolGaN™ SG HEMT

- Zero reverse recovery charge
- Ultra-low gate charge
- Integrated power stages
- Available in voltage classes 200 V and lower

➡ Best option for high-density and high-frequency applications

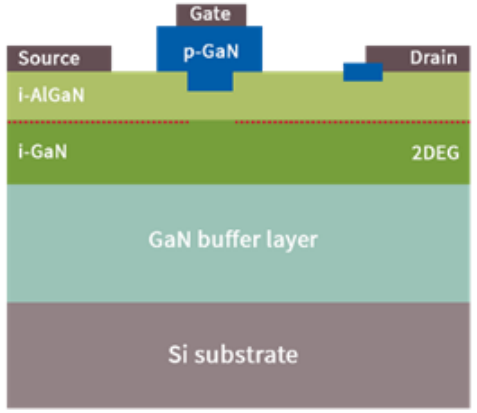

CoolGaN™ GIT HEMT

- Zero reverse recovery charge
- Lowest Q_{oss} and gate charge
- More complex driving
- 600 V rated

➡ Best option for high-density and high-frequency applications

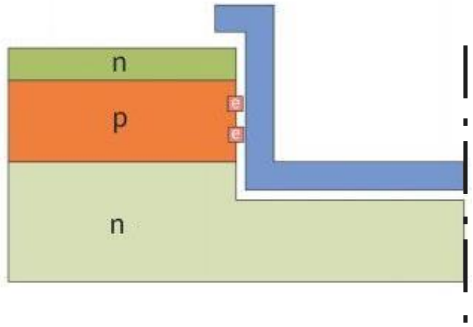

CoolSiC™

- Low reverse recovery charge
- Low temperature dependence of $R_{DS(on)}$
- Easy driving, 400 V to 2 kV rating

➡ Best option for CCM totem-pole PFC and automotive applications

Copyright © Infineon Technologies AG 2023. All rights reserved.

The benefits of using WBG are evident in a variety of end applications – thus contributing to a greener future

Mobile charger

Saving weight and energy

GaN

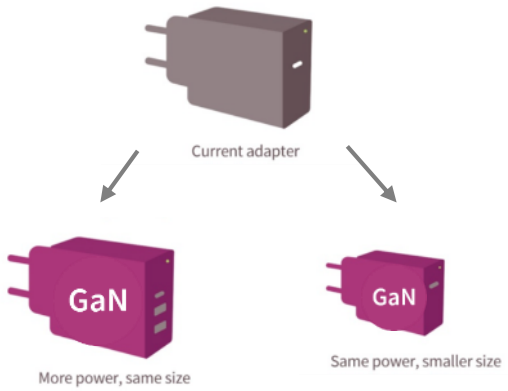

2x
less
Size & weight

Solar inverter

Doubling gravimetric power and improving η

SiC



2008 **2018** **2022**
2 kV

kW/kg **0,09** **1,6** **>3**

Electric car

Increasing range

Main inverter

SiC

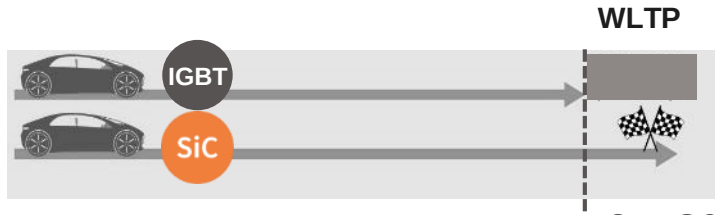

+10-12%

Increasing power density

OBC

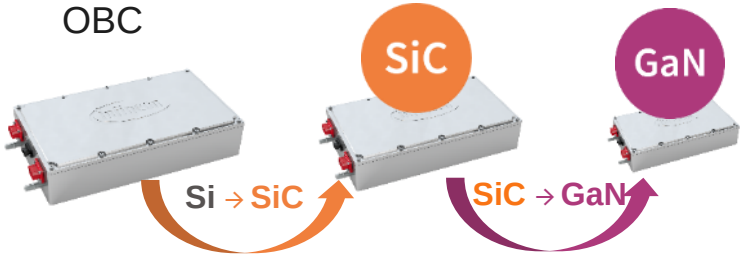

2 kW/L 2020
4 kW/l 2024
>6 kW/l > 2025

Copyright © Infineon Technologies AG 2023. All rights reserved.

A dual-port three-stage all-GaN 240 W USB-C charger solution

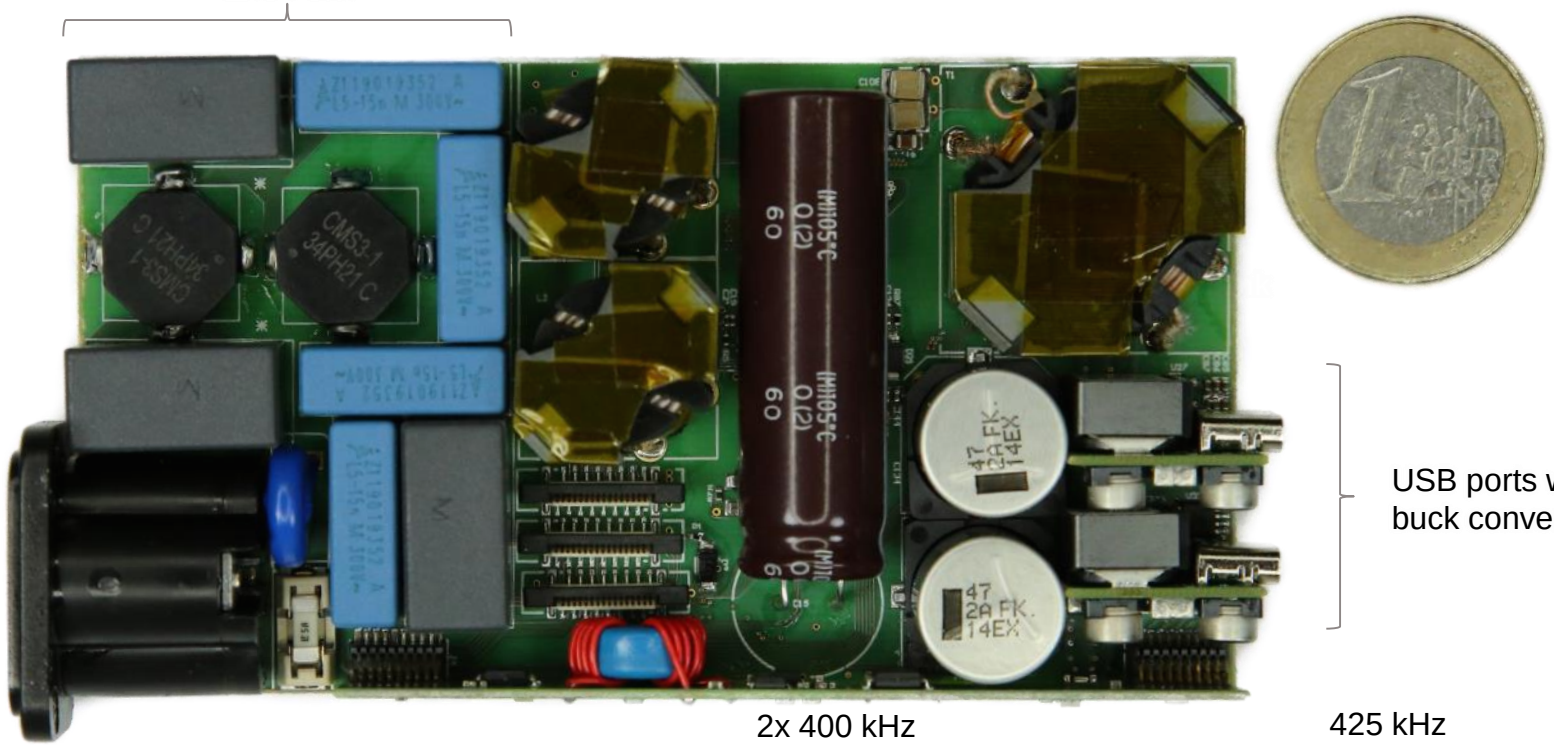

42 W/in³ (uncased, 24 W/in³ cased)

113 g (uncased)

95.1% efficiency (240 W, 90 V_{rms})

Dimensions: W x L x H: **100 mm x 55 mm x 17 mm** without case

Topology

- Interleaved totem-pole
- DCX
- ZVS buck converter

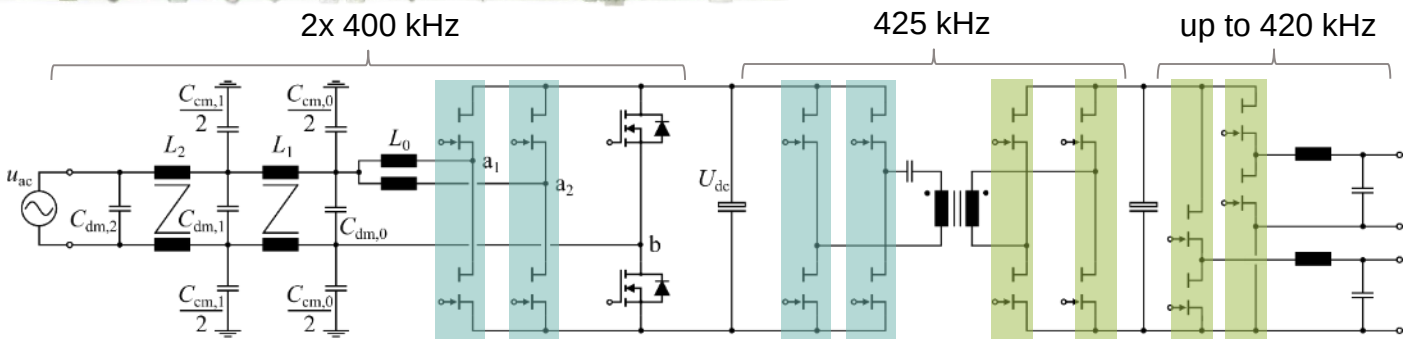

4x 600 V 140 mΩ$_{typ}$ integrated GaN half-bridges



4x 100 V 2.5 mΩ$_{typ}$ discrete GaN half-bridges

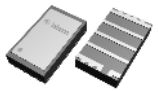

Copyright © Infineon Technologies AG 2023. All rights reserved.

Soft switching with GaN at more than 800 kHz effectively!

100 V GaN 600 V GaN

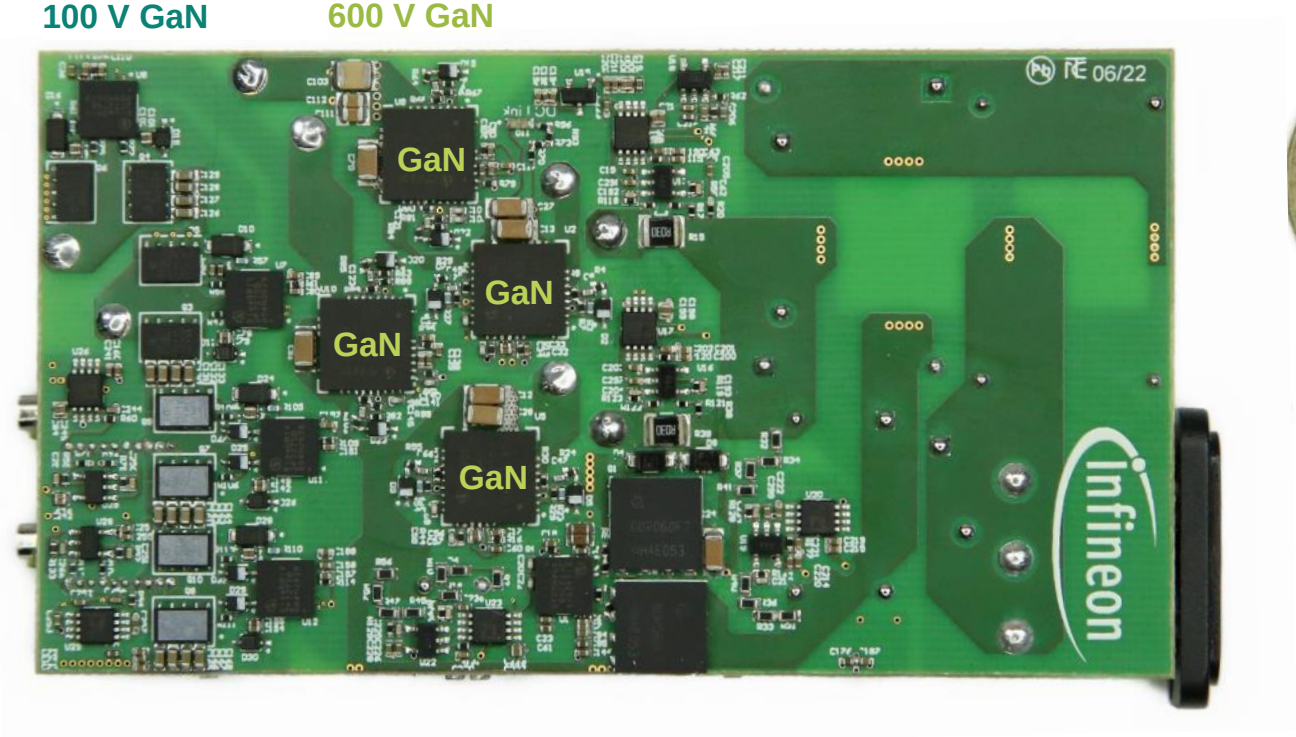



42 W/in³ (uncased, 24 W/in³ cased)

113 g (uncased)

95.1% efficiency (240 W, 90 V_{rms})

Dimensions: W x L x H: **100 mm x 55 mm x 17 mm** without case

Value proposition:
Size and Weight (2x vs State-of-the-art)

Topology

- Interleaved totem-pole
- DCX
- ZVS buck converter

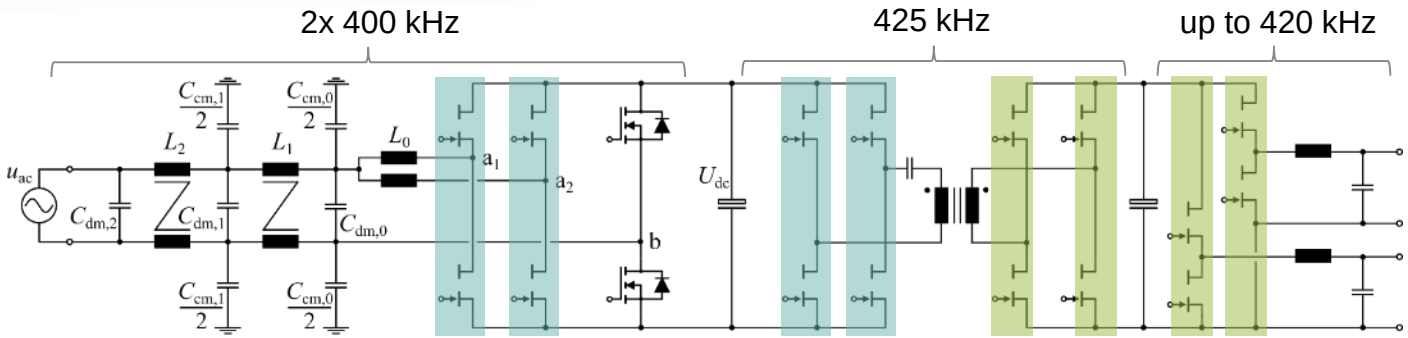



4x 600 V 140 mΩ$_{typ}$ integrated GaN half-bridges

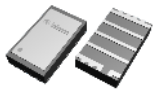

4x 100 V 2.5 mΩ$_{typ}$ discrete GaN half-bridges

Copyright © Infineon Technologies AG 2023. All rights reserved.

Ultra-compact server power supplies are needed for enterprise/edge computing segments

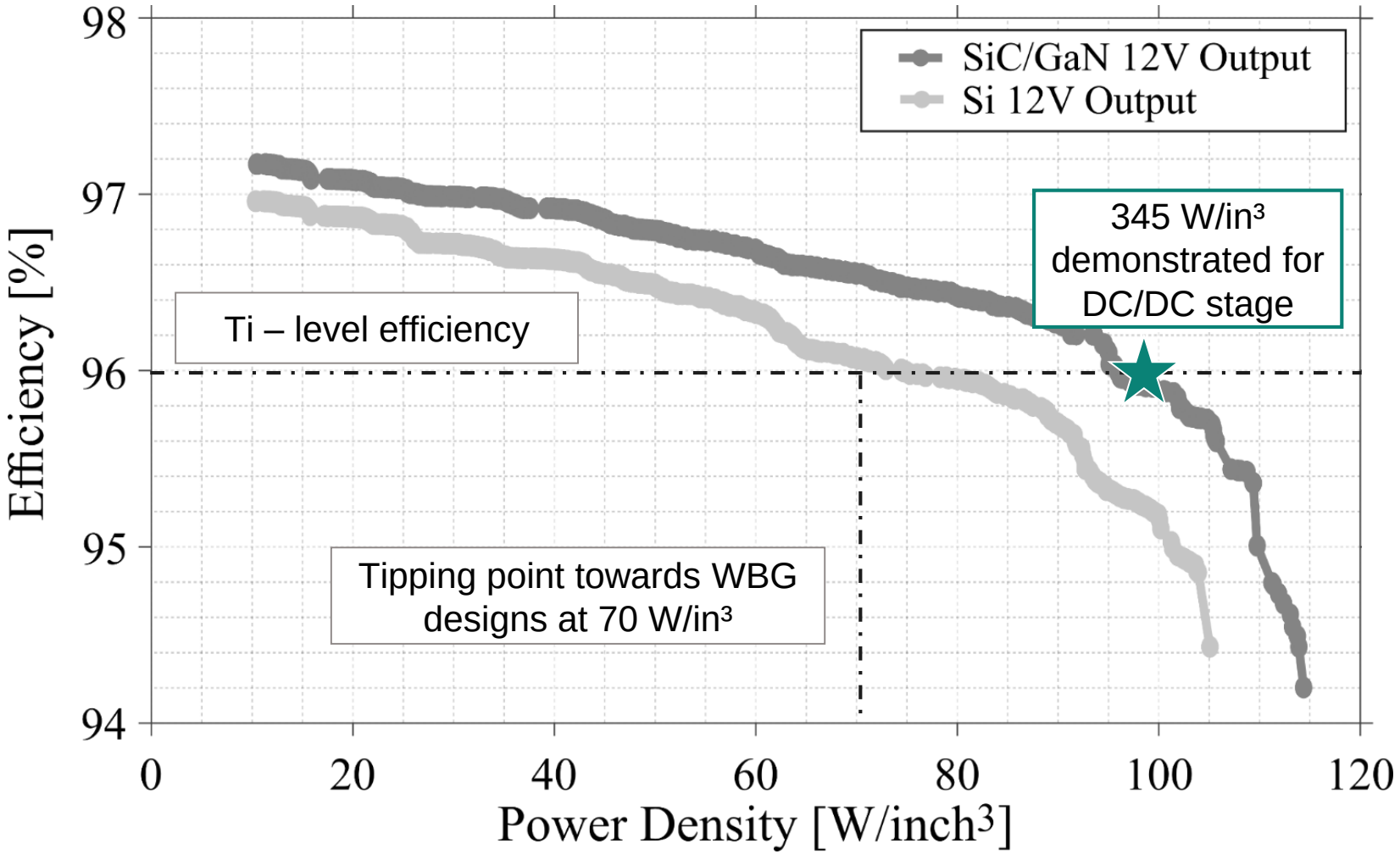

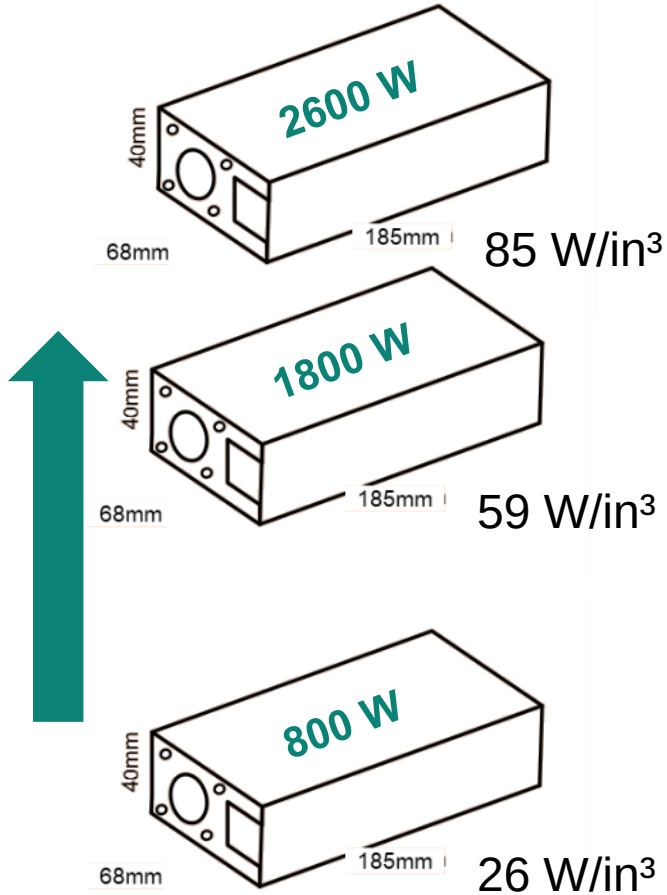

Copyright © Infineon Technologies AG 2023. All rights reserved.

Ultra-high density DC/DC converter: Magnetics, topology and modulation schemes

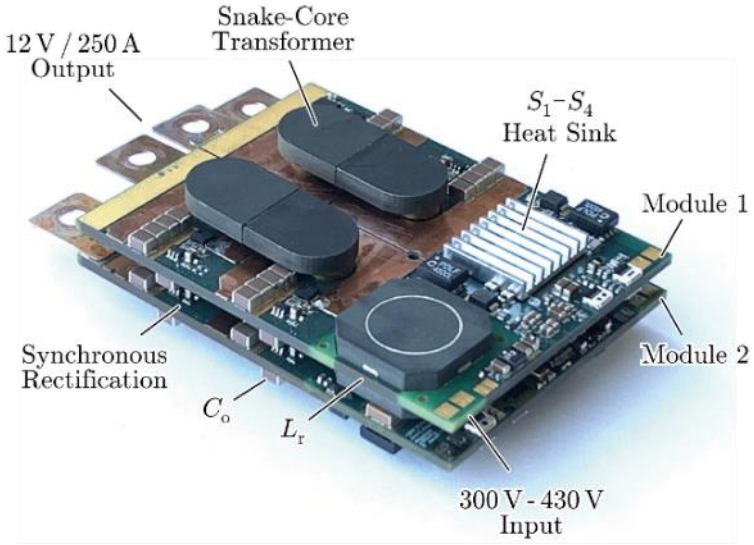

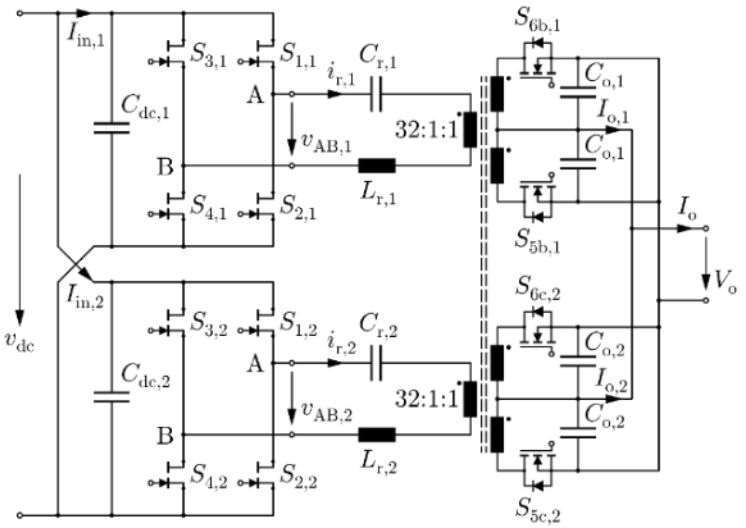

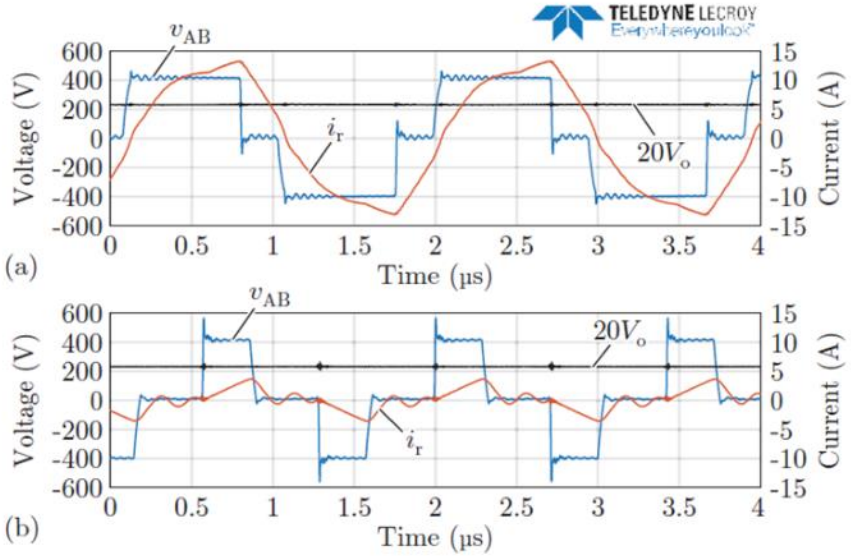

Matrix transformer in Snake configuration for highest power density

Magnetically coupled LLC stages with novel control scheme

3-level modulation to limit frequency sweep of LLC enabled by SiC and GaN

Copyright © Infineon Technologies AG 2023. All rights reserved.

Efficiency and Loss breakdown: Improvement potential on SyncRec and transformer losses

Value proposition: Power density (+50% vs State-of-the-art)

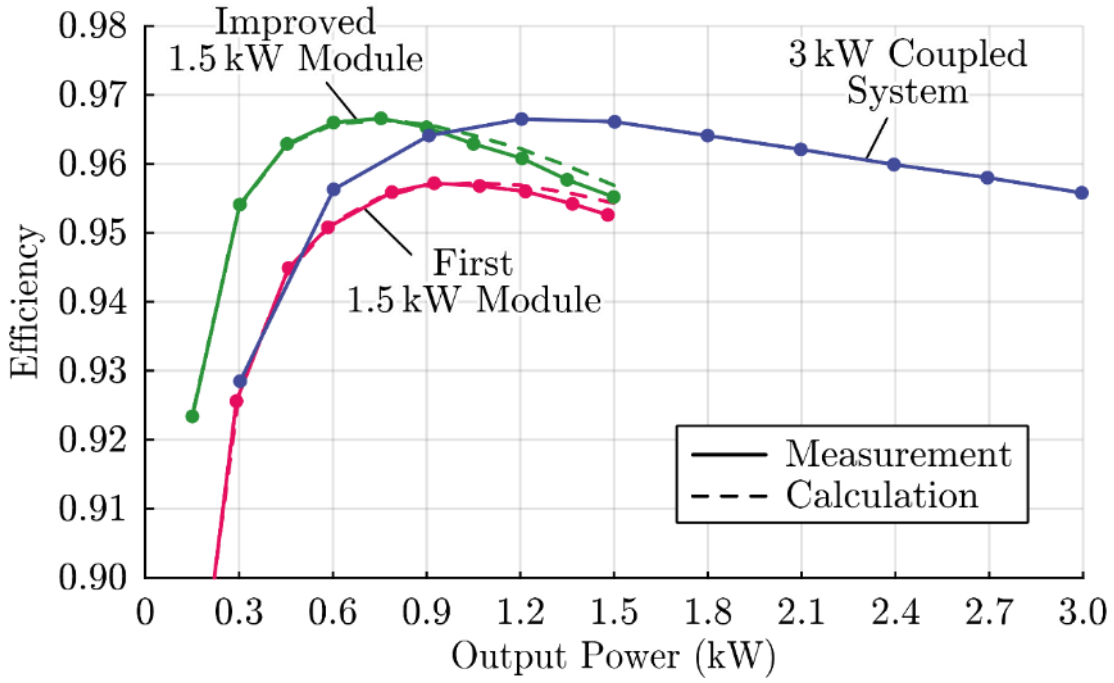

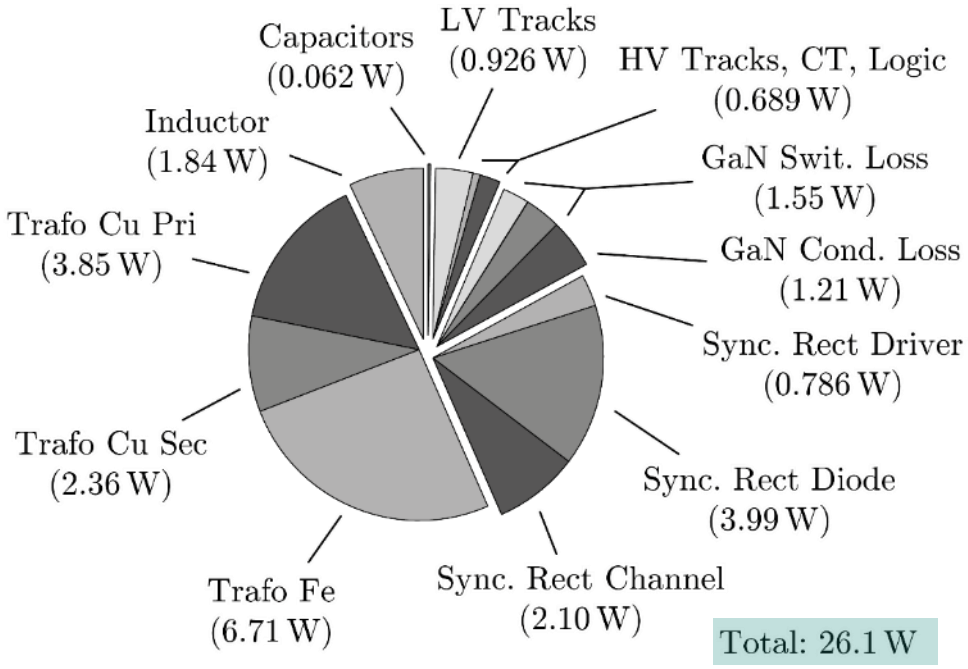

Losses at 50% Load

Copyright © Infineon Technologies AG 2023. All rights reserved.

Evolution of on-board chargers: from phase-modular solutions into true 3-phase solutions

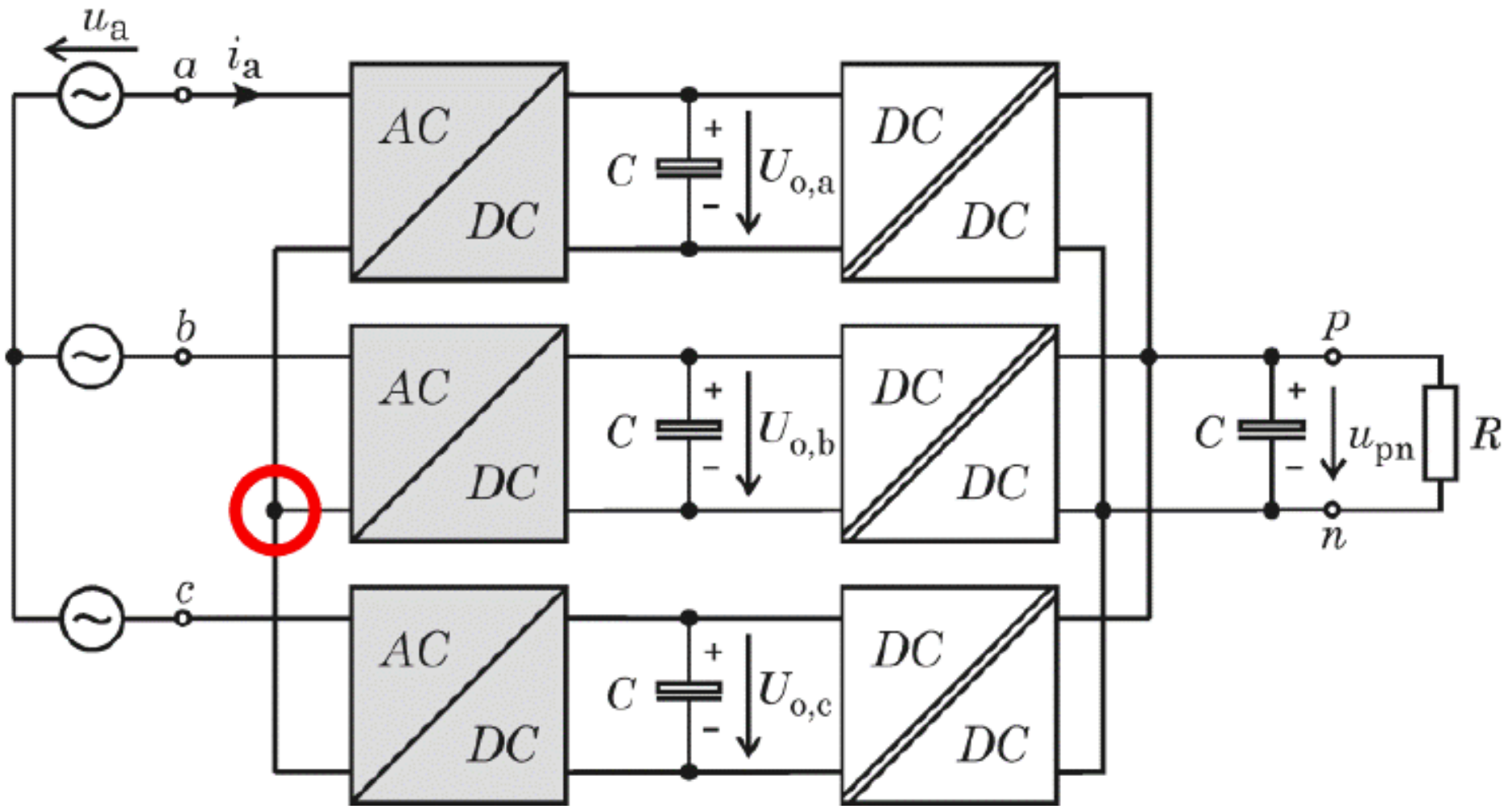

Copyright © Infineon Technologies AG 2023. All rights reserved.

Evolution of on-board chargers: from phase-modular solutions into true 3-phase solutions

Three phase grid option

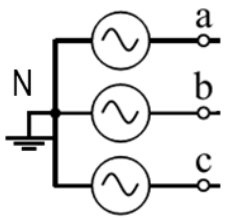

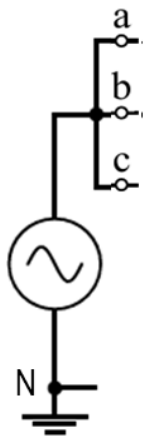

Single phase grid option

1200 V SiC MOSFET

1200 V SiC MOSFET

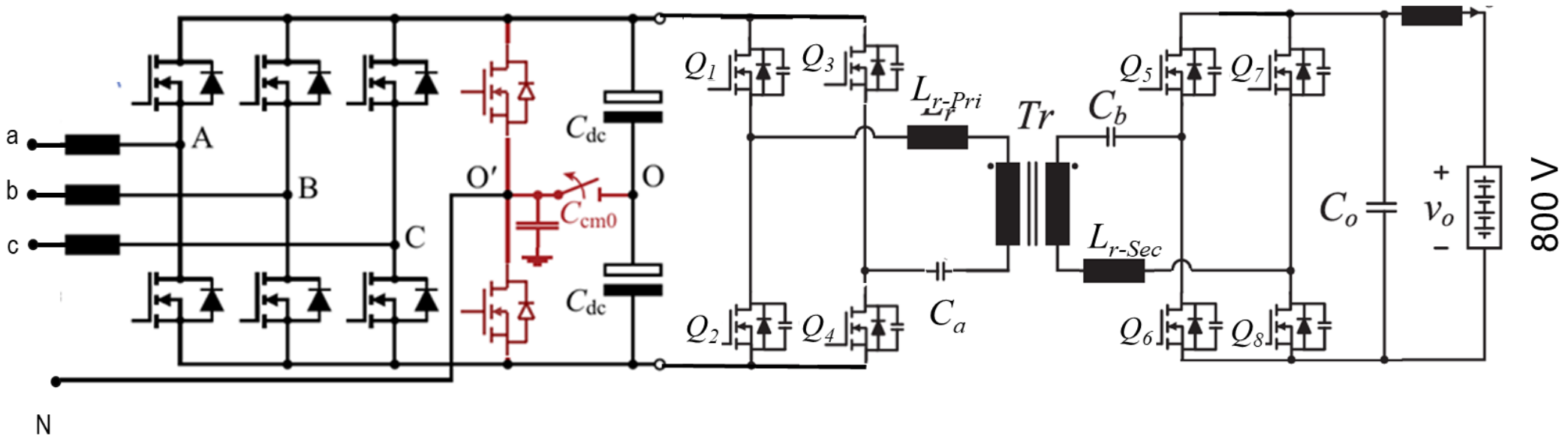

Value proposition:
Size & Simplicity, full bi-directionality, single-Φ compatibility

Copyright © Infineon Technologies AG 2023. All rights reserved.

Synergetic control – paving the way towards ultra-compact OBC

Wide EV battery voltage range

– **400 $V_{rms,in}$ → 250...1000 $V_{DC,out}$**

AC/DC: 3-Φ Vienna rectifier

– **560 kHz:** CoolGaN™ GIT + CoolSiC™ Schottky

– Novel synergetic control: **1/3 PWM**

DC/DC: 4x dual active bridges (DABs)

– **140...270 kHz:** CoolGaN™ GIT HEMT

10 kW/L* power density

96% efficiency

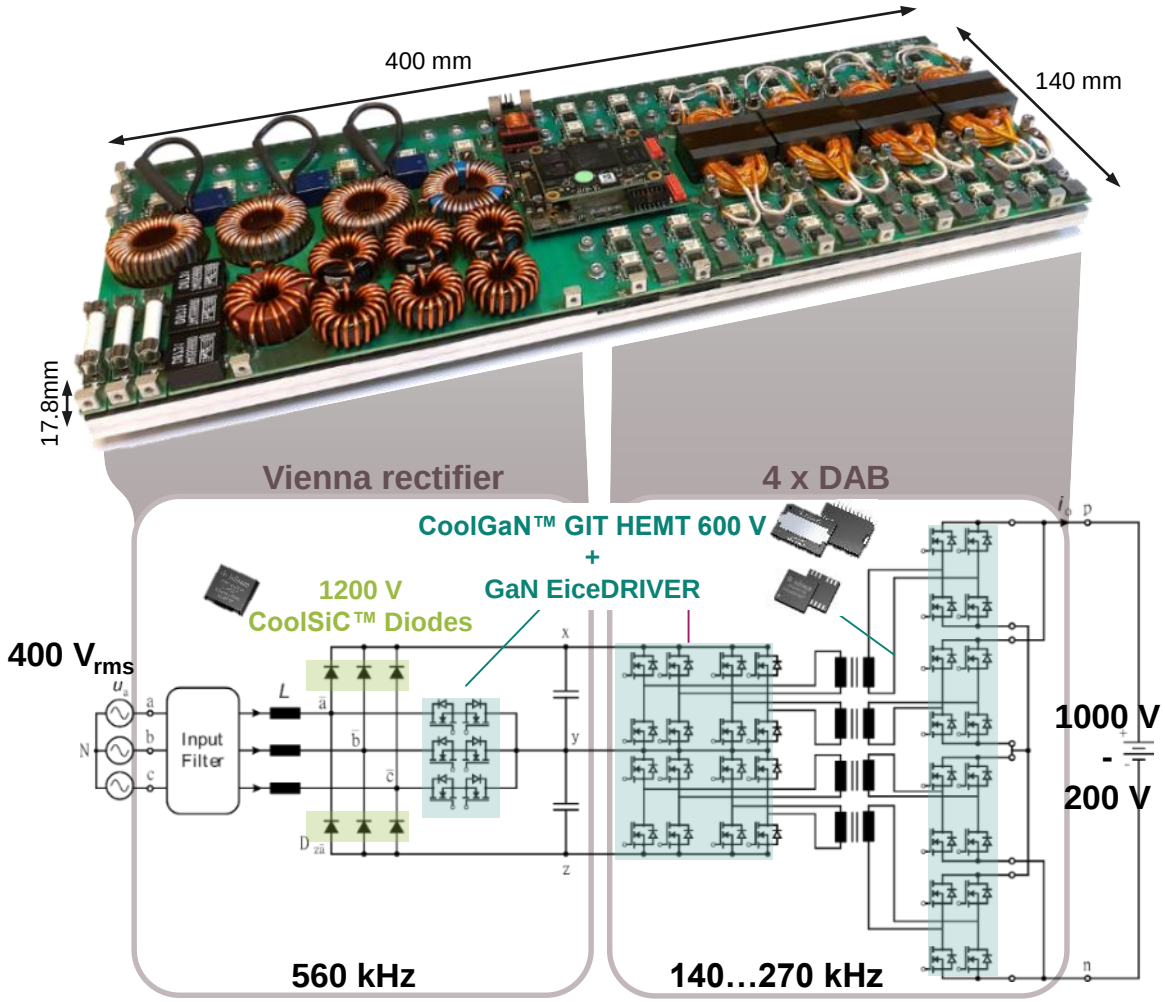

Value proposition:
Power density (3x vs State-of-the-art), form factor

Copyright © Infineon Technologies AG 2023. All rights reserved.

Infineon's GaN qualification approach is leading in the industry

CoolGaN™

Most reliable GaN HEMTs in the industry

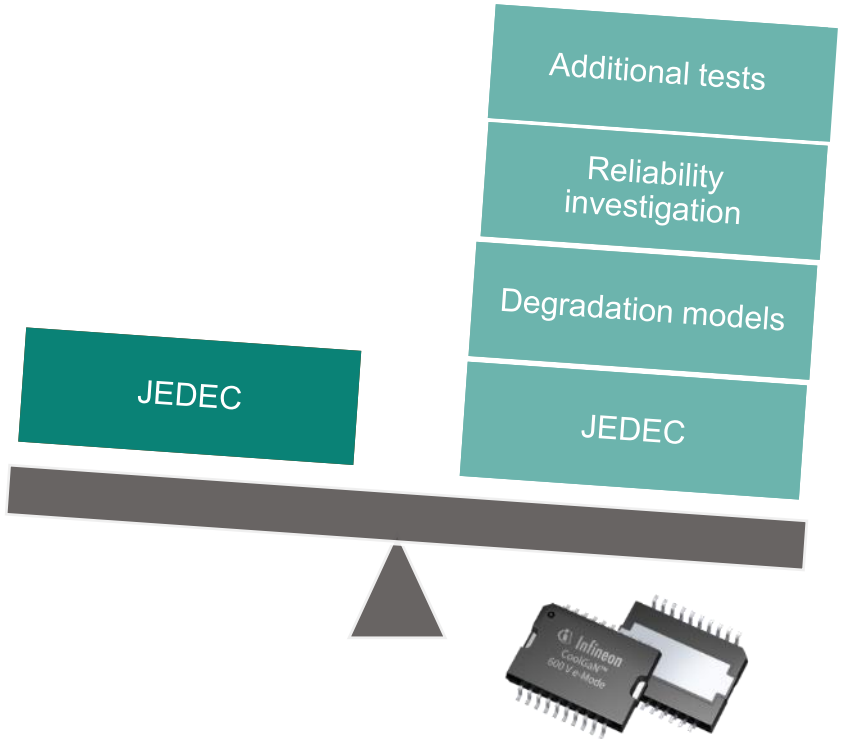

Infineon applies 4 inputs to the qualification plan including failure models to predict the lifetime and in-filed failure rates

Copyright © Infineon Technologies AG 2023. All rights reserved.

The right device concept is the basis for both ruggedness and reliablity

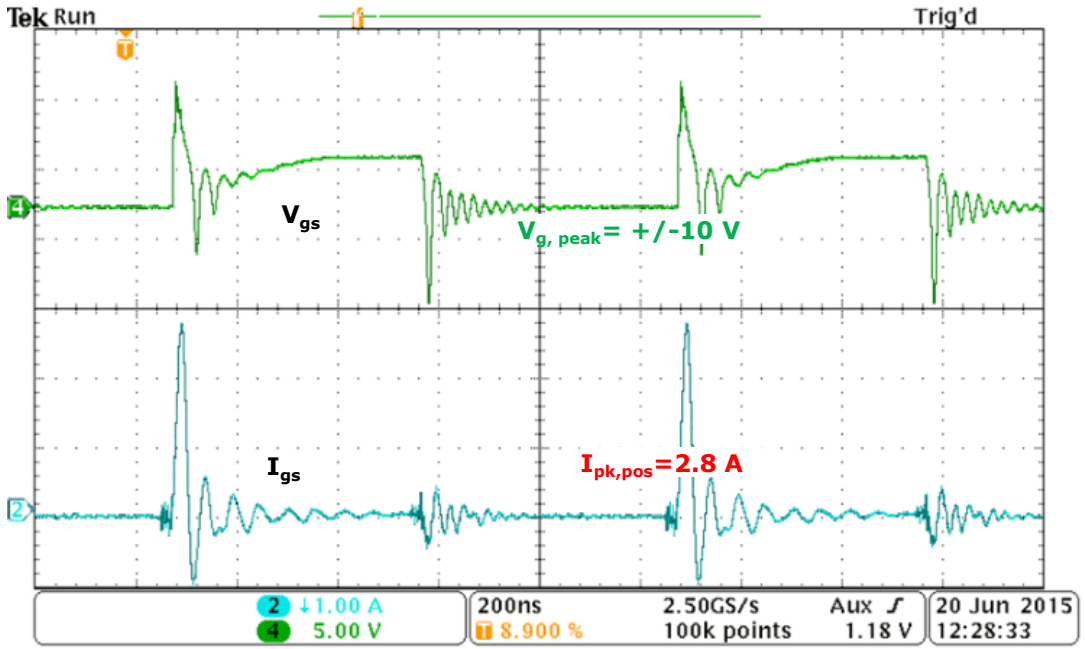

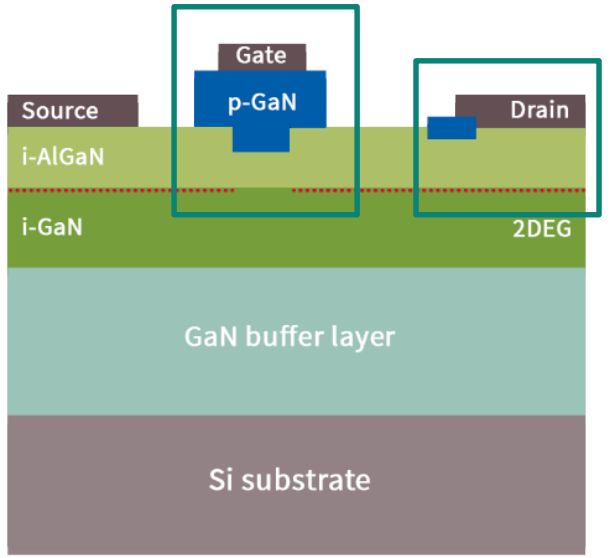

Infineon's gate injection transistor cell has the most rugged gate construction

Copyright © Infineon Technologies AG 2023. All rights reserved.

CoolGaN™ Integrated Power Stage (IPS)
Digital PWM input with integrated isolated gate drivers

CoolGaN™ IPS 600 V

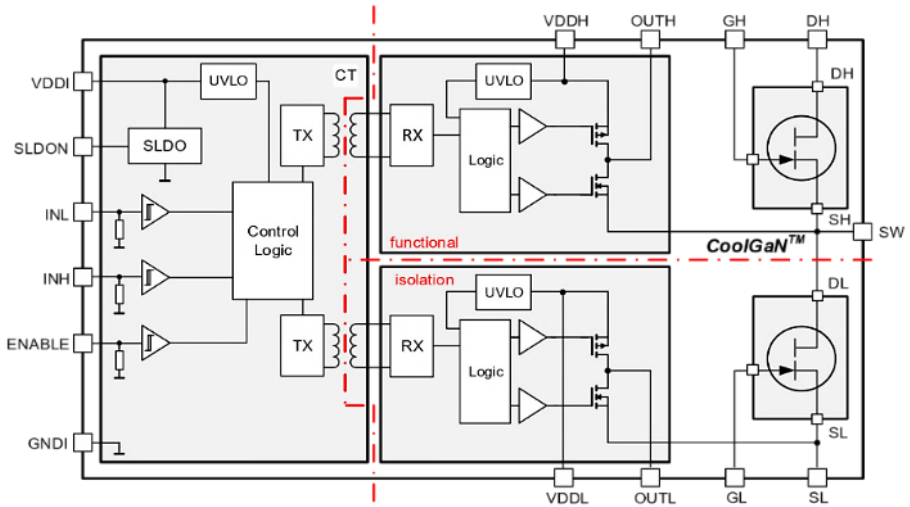

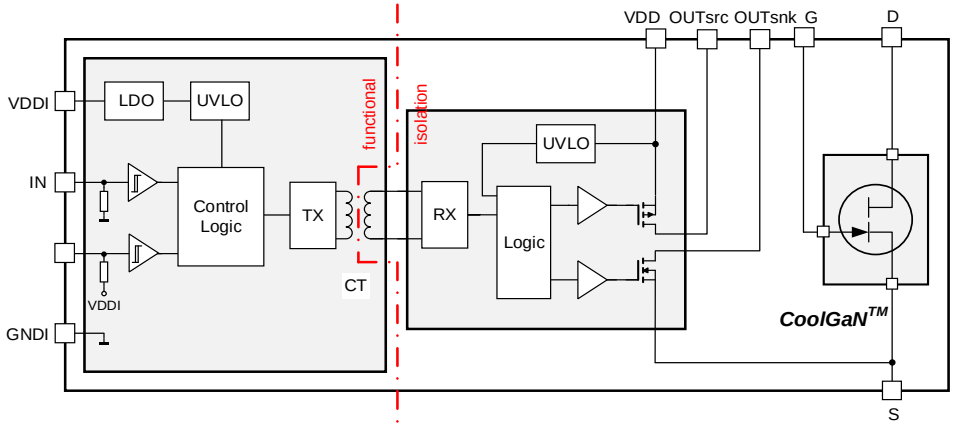

Half-bridge with CoolGaN™ switches



- Robust isolated gate-drive with 2x digital PWM inputs
- Application configurable switching behavior
- Highly accurate and stable timing allows short dead-time setting in order to maximize system efficiency
- 2x 140 / 200 / 270 / 500 mΩ
- QFN-28 8x8 package

Single-channel CoolGaN™ switch

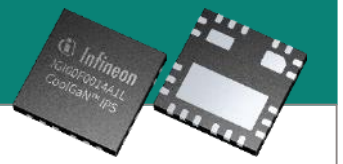

- Same features and benefits as half-bridge in high side
- Built-in isolation enables higher power half-bridge topologies using two single channel CoolGaN™ IPS
- 100/140/200/270 mΩ
- QFN-21 8x8 package

Copyright © Infineon Technologies AG 2023. All rights reserved.

Infineon 600/650 V CoolGaN™

CoolGaN GIT HEMT Generation 1							
$R_{DS(on,max)}$ [mΩ]	$R_{DS(on,typ)}$ [mΩ]	400V	600V				
		TOLL	DFN 8x8	DSO TSC	DSO BSC	TOLL	ThinPak 5x6
							
340	270						IGLR60R340D1
260	200						IGLR60R260D1
190	140		IGLD60R190D1			IGT60R190D1	IGLR60R190D1
70	55	IGT40R070D1	IGLD60R070D1	IGOT60R070D1	IGO60R070D1	IGT60R070D1	
42	35			IGOT60R042D1	IGO60R042D1	IGT60R042D1	

mass production

Features

- P-GaN resistive gate, hole injection when gate voltage is superior to forward voltage
- P-GaN drain contact to suppress current collapse

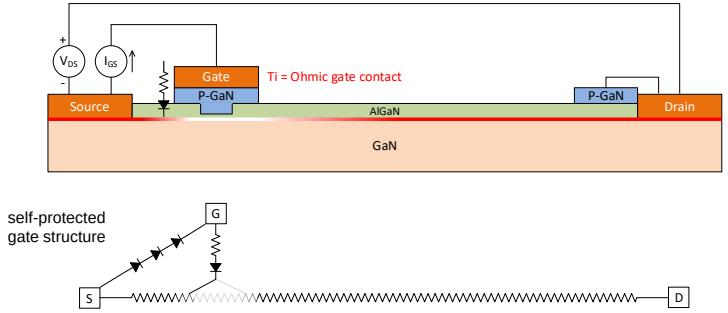

Infineon HV CoolGaN™ driving principle and its benefits

- gate forms a 3.5 V GaN clamping diode from gate to source
- It is best driven with a current source
  - Initially high peak current leads to a rapidly charged gate
  - A following steady-state current (mA range) maintains proper biasing
- Gate is self-protected → no need for external clamping circuits & absolutely spike-robust
- Reverse direction: Gate is turned off using standard gate driving techniques

→ **Current driven with inherent advantages like self-protection**

Copyright © Infineon Technologies AG 2023. All rights reserved.

SMD packages for CoolGaN™ cooling concepts

Package	DSO BSC PG-DSO-20	DSO TSC PG-DSO-20	TOLL PG-HSOF-8	TOLT PG-HDSOP-16	DFN 8x8 PG-LSON-8	ThinPAK 5x6 PG-TSON-8
SMD package						
Thermal performance	++	+++	+	++	0	0

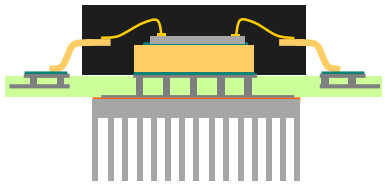

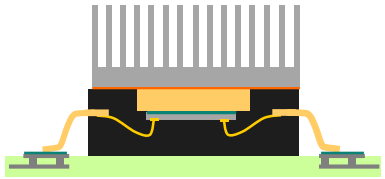

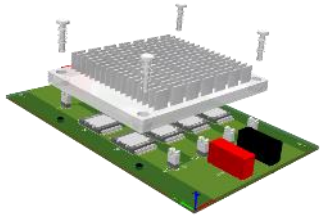

Infineon's top side cooled packages

- Address higher power needs
- Increased power density
- Higher efficiency
- Weight reduction

Copyright © Infineon Technologies AG 2023. All rights reserved.

600/650 V CoolGaN IPS Portfolio

CoolGaN IPS Generation 1				
		600V		
$R_{DS(on,typ)}$ [mΩ]	$R_{DS(on,max)}$ [mΩ]	QFN 8x8 Single Switch galvanically isolated	QFN 8x8 Half-Bridge galvanically isolated	LGA 6x8 Half-Bridge integrated boostrap diode
				
500	650		IGI60F5050A1L	IGI60L5050A1M
270	340	IGI60F270A1L	IGI60F2727A1L	
200	260	IGI60F200A1L	IGI60F2020A1L	
140	190	IGI60F140A1L	IGI60F1414A1L	
100	130	IGI60F100A1L		
70	100			
55	70			
35	42			
22	30			

600V CoolGaN™ IPS

- C/T isolation: QFN 8x8
- Level shift & BST diode: QFN 6x8
- Single switch and Half-bridge configuration

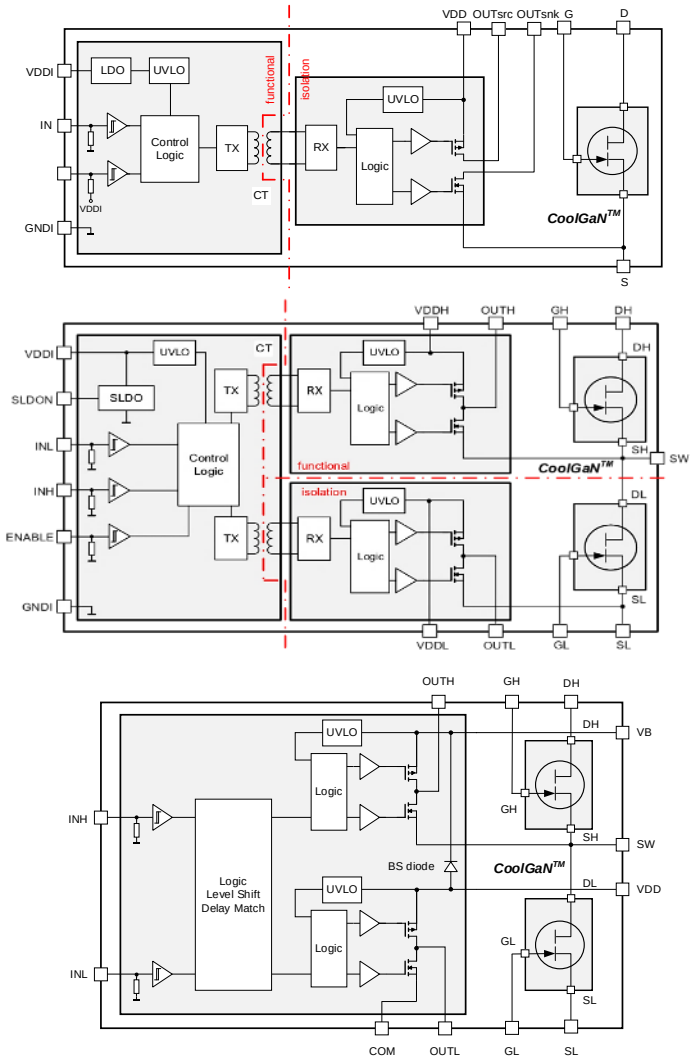

Copyright © Infineon Technologies AG 2023. All rights reserved.

Boards & Designs



Boards & Designs

REF_XDPS2221_140W1

Status: on request



Boards & Designs

EVAL_1EDF_G1B_HB_GAN

Status: active and preferred



Boards & Designs

EVAL_HB_PARALLELGAN

Status: active and preferred



Boards & Designs

EVAL_AUDAMP24

Status: active and preferred



Boards & Designs

EVAL_2500W_PFC_GAN_A

Status: active and preferred



Boards & Designs

VD_USB_PAG_65W_COOLGAN



Boards & Designs

VD_USB_PAG_45W_COOLGAN



Boards & Designs

KIT_1EDB_AUX_GAN

Status: active



Boards & Designs

EVAL_3K6W_LLC_GAN

Status: on request



Boards & Designs

EVAL_3K4W_TP_PFC_GAN

On request

Copyright © Infineon Technologies AG 2023. All rights reserved.

Support 600 V CoolGaN™

Collaterals and brochures	– Product briefs – Selection guides – Application brochures – Presentations – Press releases, ads
Technical material	– Application notes – Technical articles – Simulation models – Datasheets, MCDS files – PCB design data
Evaluation boards	– Evaluation boards – Demoboards – Reference designs
Videos	– Technical videos – Product information videos

www.infineon.com/GaN

Copyright © Infineon Technologies AG 2023. All rights reserved.

Summary

- We expect a co-existence of the three major power semiconductor technologies Si, SiC and GaN, for at least another decade. While SiC will prevail in high power applications such as PV inverter or traction inverter at moderate switching frequencies and typically hard switching transitions, GaN will dominate application segments in the range from few Watts into the domains of few kWs at moderate to high switching frequencies.

- The value proposition of GaN for use cases in e.g. chargers, server power supplies and On-board charger is primarily signficantly higher power density typically unreachable by other technologies.

- The portfolio extension will serve these markets with a broad range of Discretes and integrated power stages, dedicated drivers and a wide offering of packages.

Copyright © Infineon Technologies AG 2023. All rights reserved.


Infineon