POWERING AI

Enabling 1 MW AI racks with HV and MV IBC solutions

Discover how we are enabling the transition to higher-power AI data centers with scalable intermediate bus converter (IBC) solutions, high-voltage power conversion, and advanced GaN technologies. This demo features our medium-voltage IBC module family, an 800 V to 6 V 10 kW reference design, and the latest GaN EasyPACK™ S development.

Benefits
- Support for highest quality and system reliability requirements
- Faster time-to-market and reduced design risk through qualified complete module solutions and validated reference designs
- One trusted partner to reduce supply chain complexity for the complete grid-to-core power flow

Highlight products
- Unregulated IBC modules
- Regulated IBC modules
- IGLC65R020D2: CoolGaN™ 650 V
- IQEH42NE2LM7ZCGSC: OptiMOS™ 7 25 V MOSFET

Applications
- AI server racks
- Non-AI server racks

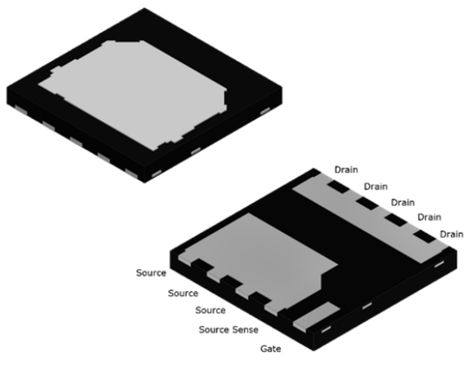

IGLC65R020D2: 650V CoolGaN™

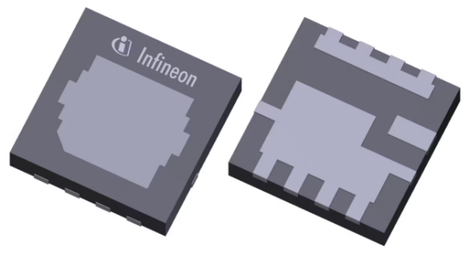

IQEH42NE2LM7ZCGSC: 25V OptiMOS™ 7

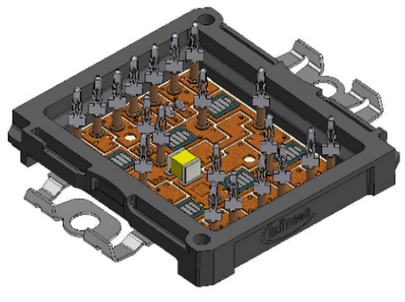

EasyPACK™ S GaN

Scan for more information