技术信息 / Technical Information

IGBT-模块
IGBT-modules

F3L200R07PE4

EconoPACK™4 模块 采用第四代沟槽栅/场终止IGBT4和第四代发射极控制二极管 带有温度检测NTC
EconoPACK™4 module with Trench/Fieldstop IGBT4 and Emitter Controlled 4 diode and NTC

初步数据 / Preliminary Data

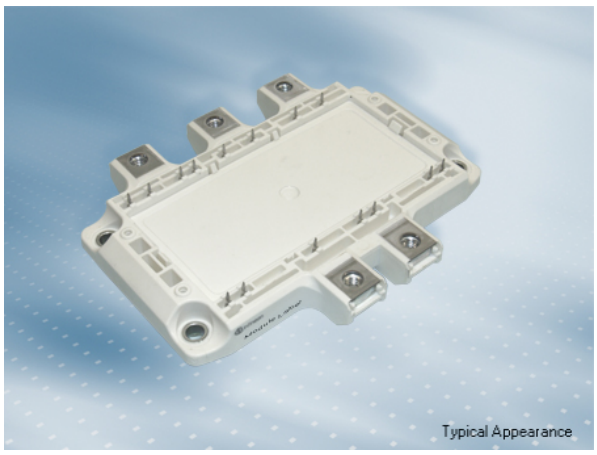

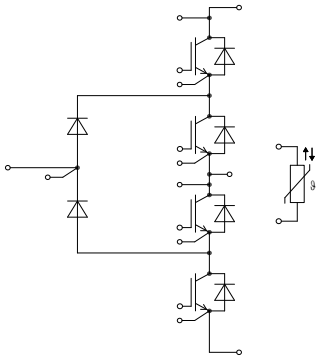

V_{CES} = 650V
$I_{C\ nom}$ = 200A / I_{CRM} = 400A

典型应用
- 三电平应用

Typical Applications
- 3-Level-Applications

电气特性
- 增加阻断电压至650V
- 提高工作结温 $T_{vj\ op}$
- 沟槽栅IGBT4
- $T_{vj\ op}$ = 150°C
- V_{CEsat} 带正温度系数

Electrical Features
- Increased blocking voltage capability to 650V
- Extended Operation Temperature $T_{vj\ op}$
- Trench IGBT 4
- $T_{vj\ op}$ = 150°C
- V_{CEsat} with positive Temperature Coefficient

机械特性
- 4 kV 交流 1分钟 绝缘
- 高机械坚固性
- 集成NTC温度传感器
- 绝缘的基板
- 标封装

Mechanical Features
- 4 kV AC 1min Insulation
- High mechanical robustness
- Integrated NTC temperature sensor
- Isolated Base Plate
- Standard Housing

Module Label Code

Barcode Code 128

Sample
0000012345600000000000

DMX - Code

Content of the Code	Digit
Module Serial Number	1 - 5
Module Material Number	6 - 11
Production Order Number	12 - 19
Datecode (Production Year)	20 - 21
Datecode (Production Week)	22 - 23

prepared by: AS	date of publication: 2013-11-05	
approved by: MK	revision: 2.0	UL approved (E83335)

初步数据
Preliminary Data

IGBT, 逆变器 / IGBT,Inverter

最大额定值 / Maximum Rated Values

集电极 - 发射极电压 Collector-emitter voltage	T_{vj} = 25°C	V_{CES}	650	V
连续集电极直流电流 Continuous DC collector current	T_C = 80°C, $T_{vj\,max}$ = 175°C	$I_{C\,nom}$	200	A
集电极重复峰值电流 Repetitive peak collector current	t_P = 1 ms	I_{CRM}	400	A
总功率损耗 Total power dissipation	T_C = 25°C, $T_{vj\,max}$ = 175°C	P_{tot}	680	W
栅极 - 发射极峰值电压 Gate-emitter peak voltage		V_{GES}	+/-20	V

特征值 / Characteristic Values

			min.	typ.	max.	
集电极 - 发射极饱和电压 Collector-emitter saturation voltage	I_C = 200 A, V_{GE} = 15 V T_{vj} = 25°C I_C = 200 A, V_{GE} = 15 V T_{vj} = 125°C I_C = 200 A, V_{GE} = 15 V T_{vj} = 150°C	$V_{CE\,sat}$		1,55 1,70 1,75	1,95	V V V
栅极阈值电压 Gate threshold voltage	I_C = 3,20 mA, V_{CE} = V_{GE}, T_{vj} = 25°C	V_{GEth}	5,0	5,8	6,5	V
栅极电荷 Gate charge	V_{GE} = -15 V ... +15 V	Q_G		2,00		µC
内部栅极电阻 Internal gate resistor	T_{vj} = 25°C	R_{Gint}		1,0		Ω
输入电容 Input capacitance	f = 1 MHz, T_{vj} = 25°C, V_{CE} = 25 V, V_{GE} = 0 V	C_{ies}		12,5		nF
反向传输电容 Reverse transfer capacitance	f = 1 MHz, T_{vj} = 25°C, V_{CE} = 25 V, V_{GE} = 0 V	C_{res}		0,38		nF
集电极-发射极截止电流 Collector-emitter cut-off current	V_{CE} = 650 V, V_{GE} = 0 V, T_{vj} = 25°C	I_{CES}			1,0	mA
栅极-发射极漏电流 Gate-emitter leakage current	V_{CE} = 0 V, V_{GE} = 20 V, T_{vj} = 25°C	I_{GES}			400	nA
开通延迟时间(电感负载) Turn-on delay time, inductive load	I_C = 200 A, V_{CE} = 300 V T_{vj} = 25°C V_{GE} = ±15 V T_{vj} = 125°C R_{Gon} = 3,6 Ω T_{vj} = 150°C	$t_{d\,on}$		0,11 0,12 0,13		µs µs µs
上升时间(电感负载) Rise time, inductive load	I_C = 200 A, V_{CE} = 300 V T_{vj} = 25°C V_{GE} = ±15 V T_{vj} = 125°C R_{Gon} = 3,6 Ω T_{vj} = 150°C	t_r		0,05 0,06 0,06		µs µs µs
关断延迟时间(电感负载) Turn-off delay time, inductive load	I_C = 200 A, V_{CE} = 300 V T_{vj} = 25°C V_{GE} = ±15 V T_{vj} = 125°C R_{Goff} = 3,6 Ω T_{vj} = 150°C	$t_{d\,off}$		0,49 0,52 0,53		µs µs µs
下降时间(电感负载) Fall time, inductive load	I_C = 200 A, V_{CE} = 300 V T_{vj} = 25°C V_{GE} = ±15 V T_{vj} = 125°C R_{Goff} = 3,6 Ω T_{vj} = 150°C	t_f		0,05 0,07 0,07		µs µs µs
开通损耗能量 (每脉冲) Turn-on energy loss per pulse	I_C = 200 A, V_{CE} = 300 V, L_S = 30 nH T_{vj} = 25°C V_{GE} = ±15 V, di/dt = 3000 A/µs (T_{vj} = 150°C) T_{vj} = 125°C R_{Gon} = 3,6 Ω T_{vj} = 150°C	E_{on}		1,50 2,00 2,50		mJ mJ mJ
关断损耗能量 (每脉冲) Turn-off energy loss per pulse	I_C = 200 A, V_{CE} = 300 V, L_S = 30 nH T_{vj} = 25°C V_{GE} = ±15 V, du/dt = 3000 V/µs (T_{vj} = 150°C) T_{vj} = 125°C R_{Goff} = 3,6 Ω T_{vj} = 150°C	E_{off}		9,50 12,5 14,0		mJ mJ mJ
短路数据 SC data	V_{GE} ≤ 15 V, V_{CC} = 360 V t_P ≤ 10 µs, T_{vj} = 25°C V_{CEmax} = V_{CES} -L_{sCE} ·di/dt t_P ≤ 10 µs, T_{vj} = 150°C	I_{SC}		960 760		A A
结 - 外壳热阻 Thermal resistance, junction to case	每个 IGBT / per IGBT	R_{thJC}			0,22	K/W
外壳 - 散热器热阻 Thermal resistance, case to heatsink	每个 IGBT / per IGBT λ_{Paste} = 1 W/(m·K) / λ_{grease} = 1 W/(m·K)	R_{thCH}		0,063		K/W
在开关状态下温度 Temperature under switching conditions		$T_{vj\,op}$	-40		150	°C

prepared by: AS	date of publication: 2013-11-05
approved by: MK	revision: 2.0

初步数据
Preliminary Data

二极管,逆变器 / Diode, Inverter

最大额定值 / Maximum Rated Values

反向重复峰值电压 Repetitive peak reverse voltage	T_{vj} = 25°C	V_{RRM}	650	V
连续正向直流电流 Continuous DC forward current		I_F	200	A
正向重复峰值电流 Repetitive peak forward current	t_P = 1 ms	I_{FRM}	400	A
I2t-值 I²t - value	V_R = 0 V, t_P = 10 ms, T_{vj} = 125°C V_R = 0 V, t_P = 10 ms, T_{vj} = 150°C	I²t	2650 2450	A²s A²s

特征值 / Characteristic Values

				min.	typ.	max.	
正向电压 Forward voltage	I_F = 200 A, V_{GE} = 0 V I_F = 200 A, V_{GE} = 0 V I_F = 200 A, V_{GE} = 0 V	T_{vj} = 25°C T_{vj} = 125°C T_{vj} = 150°C	V_F		1,55 1,50 1,45	1,95	V V V
反向恢复峰值电流 Peak reverse recovery current	I_F = 200 A, - di_F/dt = 3000 A/µs (T_{vj}=150°C) V_R = 300 V V_{GE} = -15 V	T_{vj} = 25°C T_{vj} = 125°C T_{vj} = 150°C	I_{RM}		140 170 180		A A A
恢复电荷 Recovered charge	I_F = 200 A, - di_F/dt = 3000 A/µs (T_{vj}=150°C) V_R = 300 V V_{GE} = -15 V	T_{vj} = 25°C T_{vj} = 125°C T_{vj} = 150°C	Q_r		8,00 16,0 17,0		µC µC µC
反向恢复损耗（每脉冲） Reverse recovery energy	I_F = 200 A, - di_F/dt = 3000 A/µs (T_{vj}=150°C) V_R = 300 V V_{GE} = -15 V	T_{vj} = 25°C T_{vj} = 125°C T_{vj} = 150°C	E_{rec}		2,50 4,00 4,50		mJ mJ mJ
结 - 外壳热阻 Thermal resistance, junction to case	每个二极管 / per diode		R_{thJC}			0,42	K/W
外壳 - 散热器热阻 Thermal resistance, case to heatsink	每个二极管 / per diode λ_{Paste} = 1 W/(m·K) / λ_{grease} = 1 W/(m·K)		R_{thCH}		0,125		K/W
在开关状态下温度 Temperature under switching conditions			$T_{vj\,op}$	-40		150	°C

prepared by: AS	date of publication: 2013-11-05
approved by: MK	revision: 2.0

初步数据
Preliminary Data

二极管, 三电平 / Diode, 3-Level

最大额定值 / Maximum Rated Values

反向重复峰值电压 Repetitive peak reverse voltage	T_{vj} = 25°C	V_{RRM}	650	V
连续正向直流电流 Continuous DC forward current		I_F	200	A
正向重复峰值电流 Repetitive peak forward current	t_P = 1 ms	I_{FRM}	400	A
I2t-值 I²t - value	V_R = 0 V, t_P = 10 ms, T_{vj} = 125°C V_R = 0 V, t_P = 10 ms, T_{vj} = 150°C	I²t	2650 2450	A²s A²s

特征值 / Characteristic Values

				min.	typ.	max.	
正向电压 Forward voltage	I_F = 200 A, V_{GE} = 0 V I_F = 200 A, V_{GE} = 0 V I_F = 200 A, V_{GE} = 0 V	T_{vj} = 25°C T_{vj} = 125°C T_{vj} = 150°C	V_F		1,55 1,50 1,45	1,95	V V V
反向恢复峰值电流 Peak reverse recovery current	I_F = 200 A, - di_F/dt = 3500 A/µs (T_{vj}=150°C) V_R = 300 V	T_{vj} = 25°C T_{vj} = 125°C T_{vj} = 150°C	I_{RM}		140 170 180		A A A
恢复电荷 Recovered charge	I_F = 200 A, - di_F/dt = 3500 A/µs (T_{vj}=150°C) V_R = 300 V	T_{vj} = 25°C T_{vj} = 125°C T_{vj} = 150°C	Q_r		8,00 16,0 17,0		µC µC µC
反向恢复损耗（每脉冲） Reverse recovery energy	I_F = 200 A, - di_F/dt = 3500 A/µs (T_{vj}=150°C) V_R = 300 V	T_{vj} = 25°C T_{vj} = 125°C T_{vj} = 150°C	E_{rec}		2,50 4,00 4,50		mJ mJ mJ
结 - 外壳热阻 Thermal resistance, junction to case	每个二极管 / per diode		R_{thJC}			0,42	K/W
外壳 - 散热器热阻 Thermal resistance, case to heatsink	每个二极管 / per diode λ_{Paste} = 1 W/(m·K) / λ_{grease} = 1 W/(m·K)		R_{thCH}		0,125		K/W
在开关状态下温度 Temperature under switching conditions			$T_{vj\,op}$	-40		150	°C

负温度系数热敏电阻 / NTC-Thermistor

特征值 / Characteristic Values

			min.	typ.	max.	
额定电阻值 Rated resistance	T_C = 25°C	R_{25}		5,00		kΩ
R100 偏差 Deviation of R100	T_C = 100°C, R_{100} = 493 Ω	ΔR/R	-5		5	%
耗散功率 Power dissipation	T_C = 25°C	P_{25}			20,0	mW
B-值 B-value	$R_2 = R_{25} \exp [B_{25/50}(1/T_2 - 1/(298,15\ K))]$	$B_{25/50}$		3375		K
B-值 B-value	$R_2 = R_{25} \exp [B_{25/80}(1/T_2 - 1/(298,15\ K))]$	$B_{25/80}$		3411		K
B-值 B-value	$R_2 = R_{25} \exp [B_{25/100}(1/T_2 - 1/(298,15\ K))]$	$B_{25/100}$		3433		K

根据应用手册标定
Specification according to the valid application note.

prepared by: AS	date of publication: 2013-11-05
approved by: MK	revision: 2.0

初步数据
Preliminary Data

模块 / Module

绝缘测试电压 Isolation test voltage	RMS, f = 50 Hz, t = 1 min.	V_{ISOL}		4,0		kV
模块基板材料 Material of module baseplate				Cu		
内部绝缘 Internal isolation	基本绝缘 (class 1, IEC 61140) basic insulation (class 1, IEC 61140)			Al_2O_3		
爬电距离 Creepage distance	端子- 散热片 / terminal to heatsink 端子- 端子 / terminal to terminal			25,0 12,5		mm
电气间隙 Clearance	端子- 散热片 / terminal to heatsink 端子- 端子 / terminal to terminal			11,0 7,0		mm
相对电痕指数 Comperative tracking index		CTI		> 200		
			min.	typ.	max.	
外壳 - 散热器热阻 Thermal resistance, case to heatsink	每个模块 / per module λ_{Paste} = 1 W/(m·K) / λ_{grease} = 1 W/(m·K)	R_{thCH}		0,009		K/W
杂散电感,模块 Stray inductance module		L_{sCE}		45		nH
储存温度 Storage temperature		T_{stg}	-40		125	°C
模块安装的安装扭距 Mounting torque for modul mounting	螺丝 M5 根据相应的应用手册进行安装 Screw M5 - Mounting according to valid application note	M	3,00	-	6,00	Nm
端子联接扭距 Terminal connection torque	螺丝 M6 根据相应的应用手册进行安装 Screw M6 - Mounting according to valid application note	M	3,0	-	6,0	Nm
重量 Weight		G		400		g

prepared by: AS	date of publication: 2013-11-05
approved by: MK	revision: 2.0

初步数据
Preliminary Data

输出特性 IGBT, 逆变器 （典型)
output characteristic IGBT,Inverter (typical)
$I_C = f(V_{CE})$
$V_{GE} = 15$ V

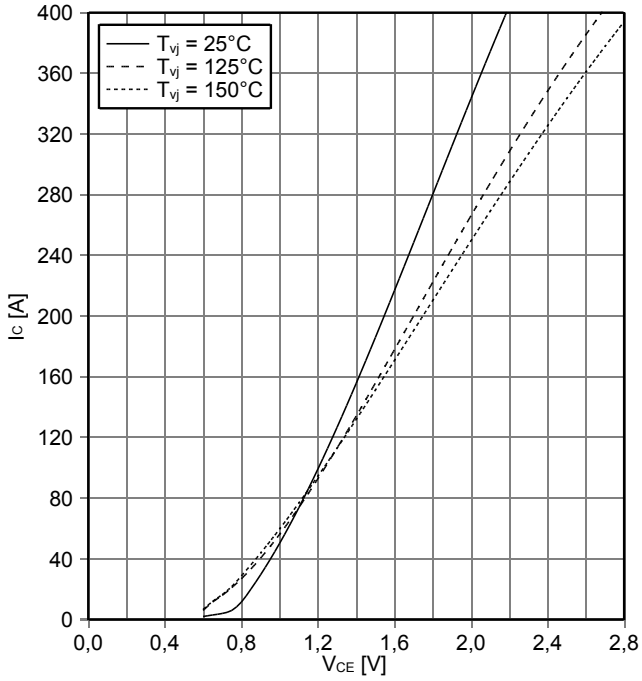

输出特性 IGBT, 逆变器 （典型)
output characteristic IGBT,Inverter (typical)
$I_C = f(V_{CE})$
$T_{vj} = 150°C$

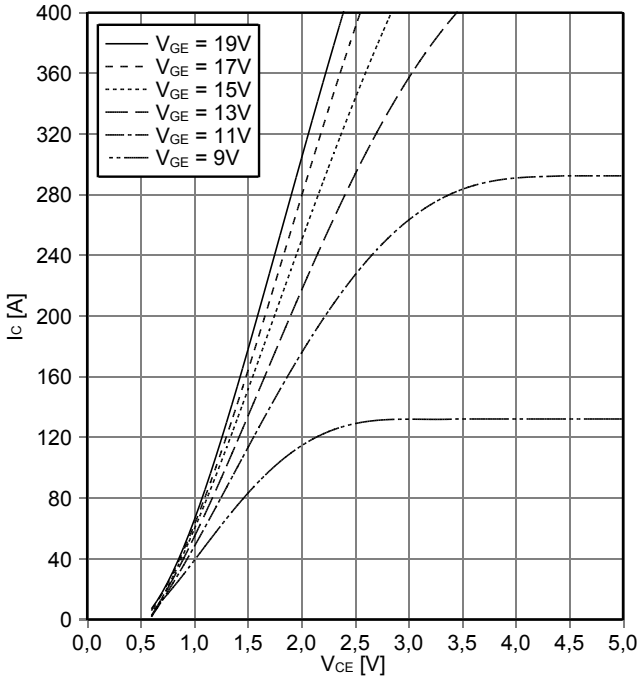

传输特性 IGBT, 逆变器 (典型)
transfer characteristic IGBT,Inverter (typical)
$I_C = f(V_{GE})$
$V_{CE} = 20$ V

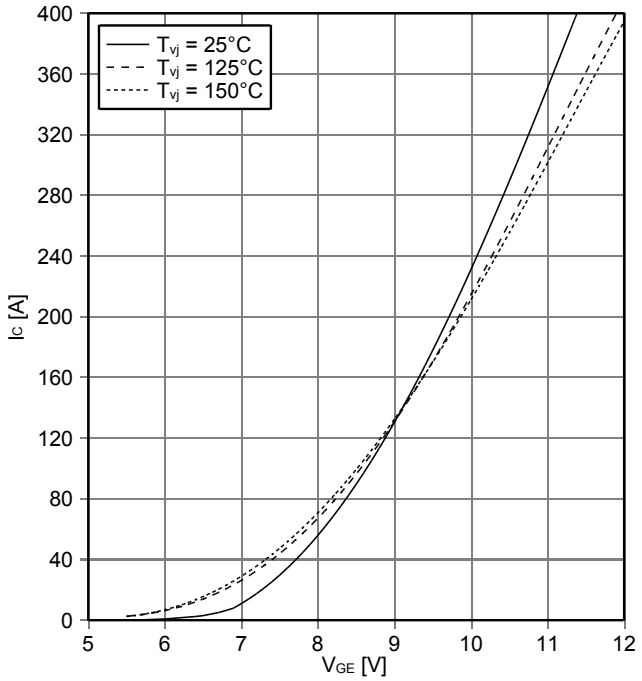

开关损耗 IGBT, 逆变器 （典型)
switching losses IGBT,Inverter (typical)
$E_{on} = f(I_C)$, $E_{off} = f(I_C)$
$V_{GE} = \pm 15$ V, $R_{Gon} = 3.6\ \Omega$, $R_{Goff} = 3.6\ \Omega$, $V_{CE} = 300$ V

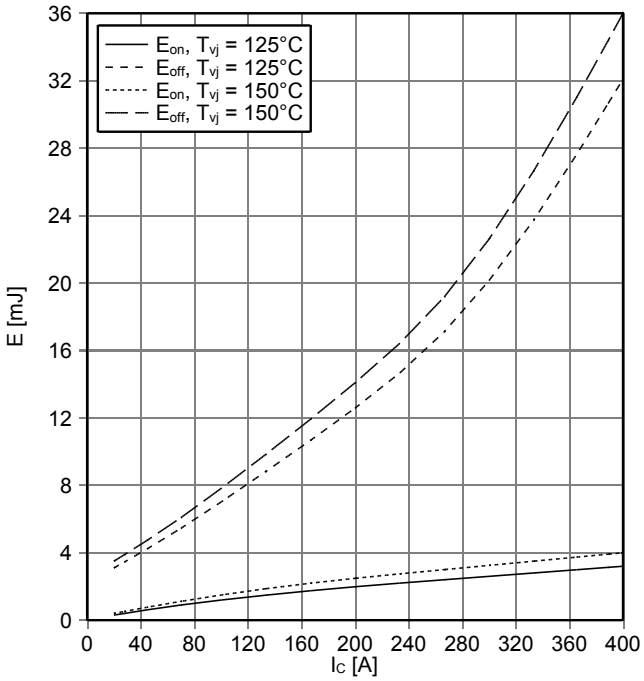

prepared by: AS	date of publication: 2013-11-05
approved by: MK	revision: 2.0

初步数据
Preliminary Data

开关损耗 IGBT, 逆变器 （典型）
switching losses IGBT,Inverter (typical)
$E_{on} = f(R_G)$, $E_{off} = f(R_G)$
$V_{GE} = \pm 15$ V, $I_C = 200$ A, $V_{CE} = 300$ V

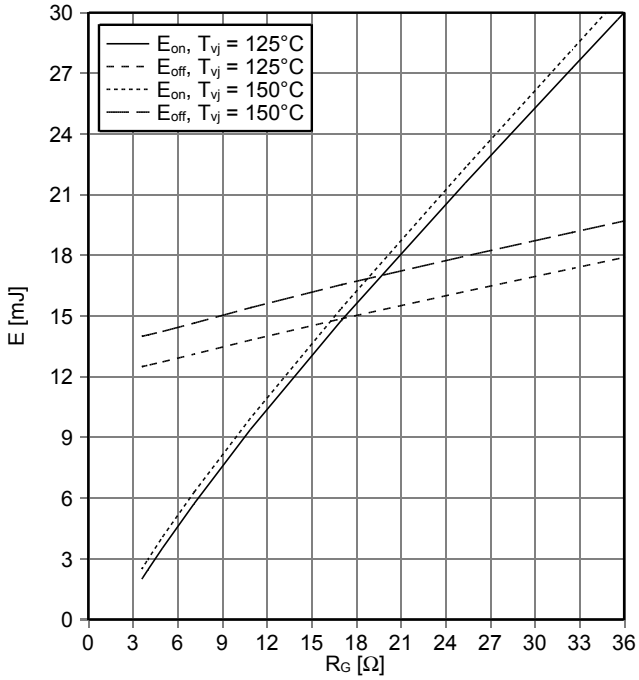

瞬态热阻抗 IGBT, 逆变器
transient thermal impedance IGBT,Inverter
$Z_{thJC} = f(t)$

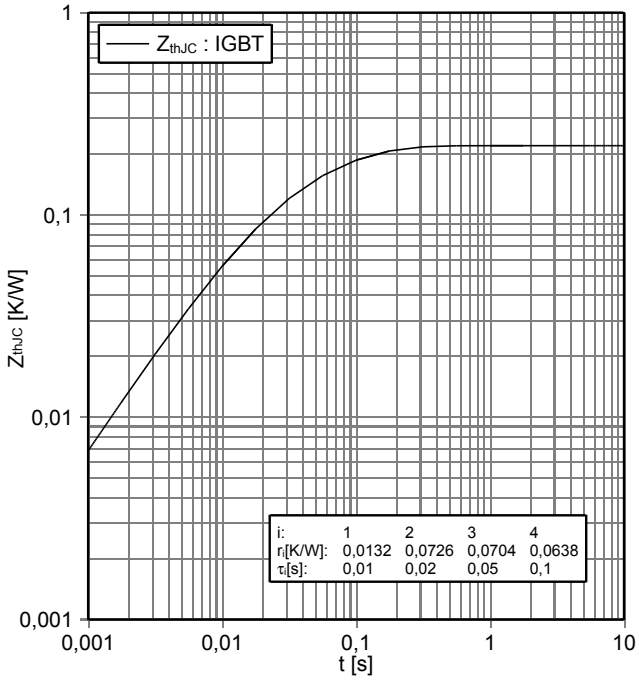

反偏安全工作区 IGBT, 逆变器 （RBSOA）
reverse bias safe operating area IGBT,Inverter (RBSOA)
$I_C = f(V_{CE})$
$V_{GE} = \pm 15$ V, $R_{Goff} = 3.6\ \Omega$, $T_{vj} = 150°C$

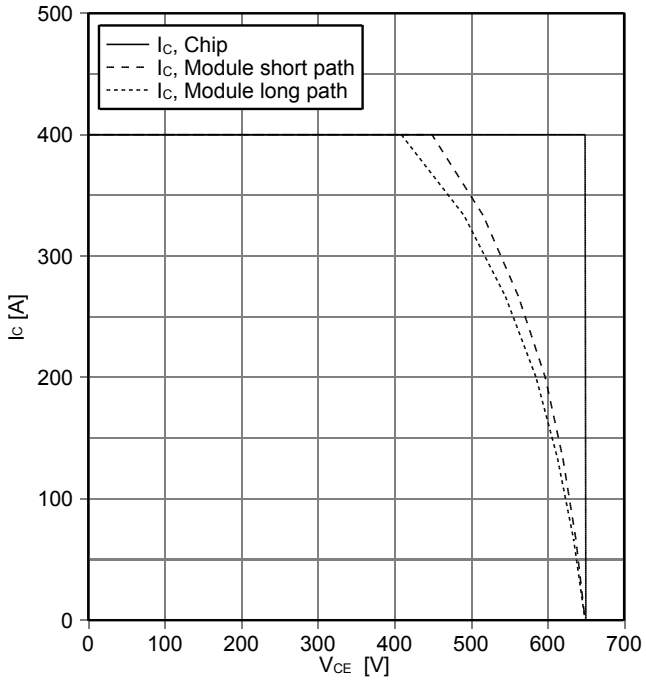

正向偏压特性 二极管,逆变器 （典型）
forward characteristic of Diode, Inverter (typical)
$I_F = f(V_F)$

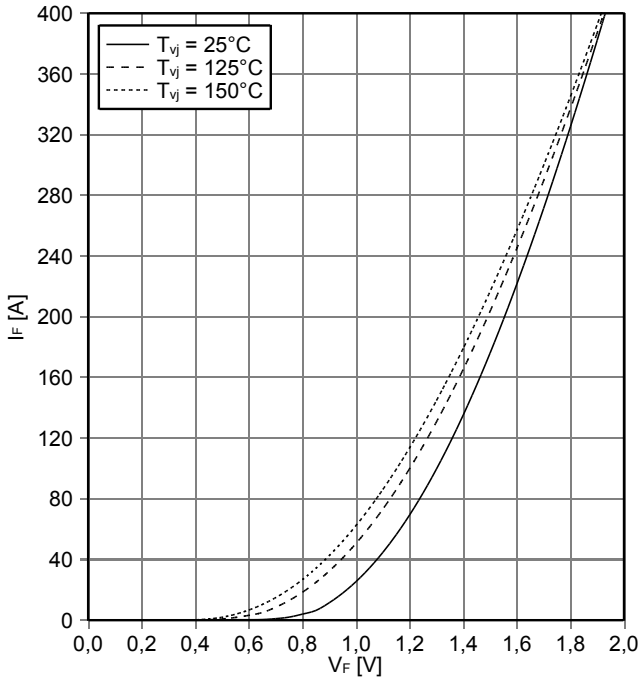

prepared by: AS	date of publication: 2013-11-05
approved by: MK	revision: 2.0

初步数据
Preliminary Data

开关损耗 二极管,逆变器 （典型)
switching losses Diode, Inverter (typical)
$E_{rec} = f(I_F)$
$R_{Gon} = 3.6\ \Omega$, $V_{CE} = 300$ V

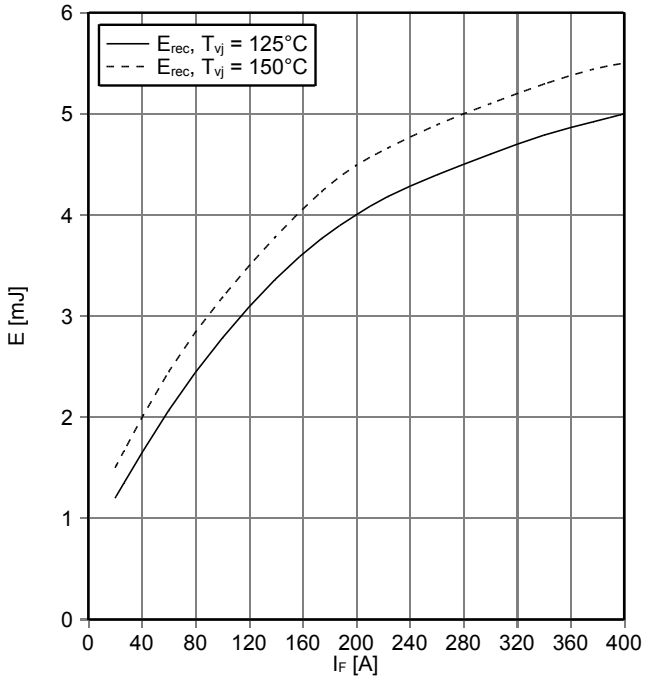

开关损耗 二极管,逆变器 （典型)
switching losses Diode, Inverter (typical)
$E_{rec} = f(R_G)$
$I_F = 200$ A, $V_{CE} = 300$ V

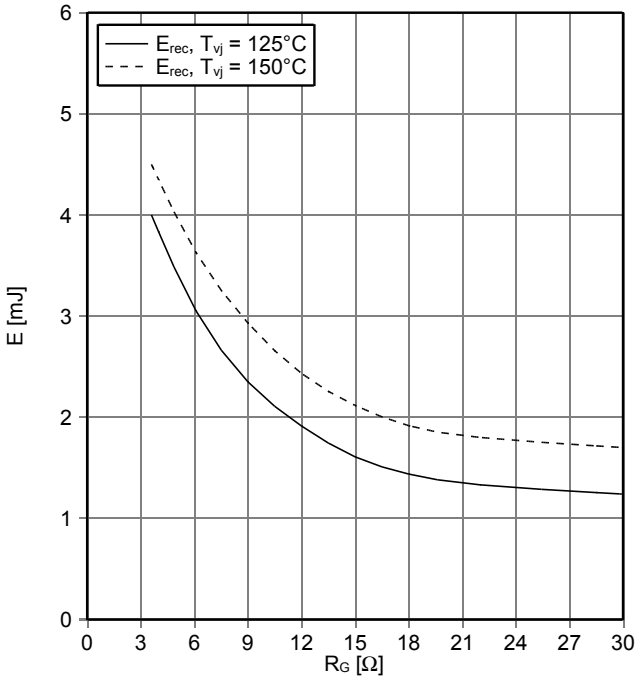

瞬态热阻抗 二极管,逆变器
transient thermal impedance Diode, Inverter
$Z_{thJC} = f(t)$

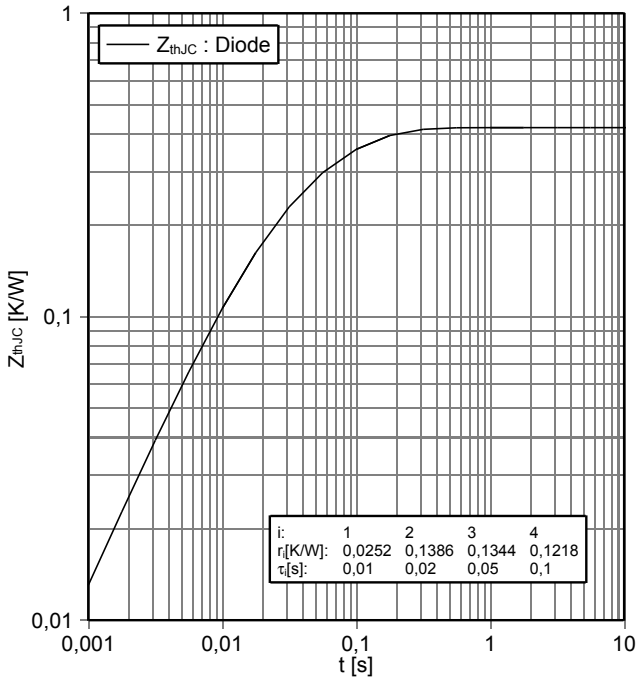

正向偏压特性 二极管, 三电平 （典型)
forward characteristic of Diode, 3-Level (typical)
$I_F = f(V_F)$

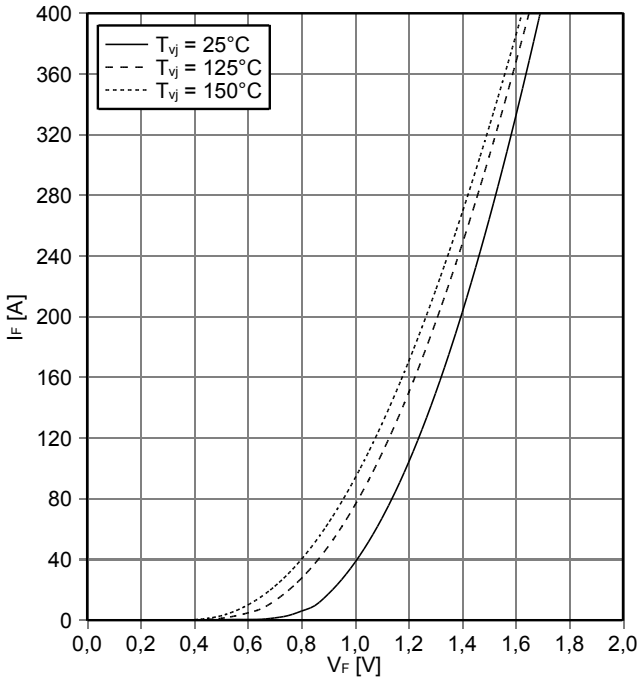

prepared by: AS	date of publication: 2013-11-05
approved by: MK	revision: 2.0

初步数据
Preliminary Data

开关损耗 二极管, 三电平 （典型）
switching losses Diode, 3-Level (typical)
$E_{rec} = f(I_F)$
$R_{Gon} = 3.6\ \Omega$, $V_{CE} = 300$ V

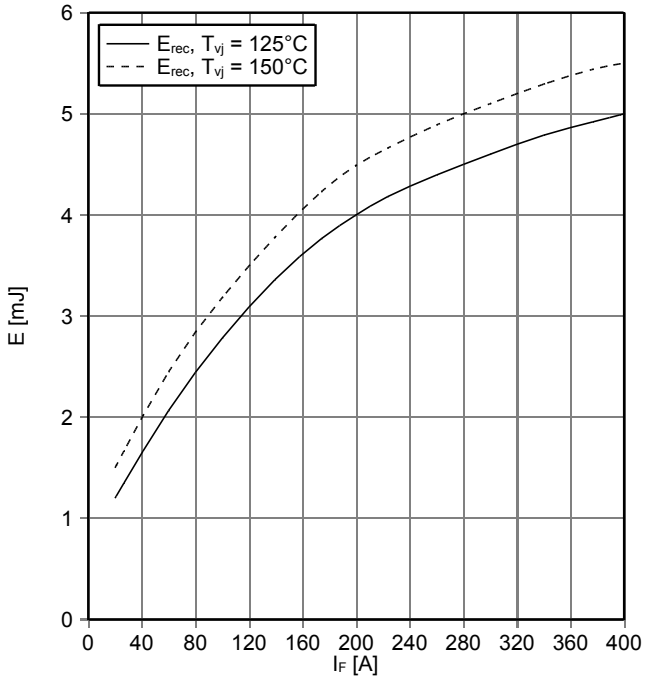

开关损耗 二极管, 三电平 （典型）
switching losses Diode, 3-Level (typical)
$E_{rec} = f(R_G)$
$I_F = 200$ A, $V_{CE} = 300$ V

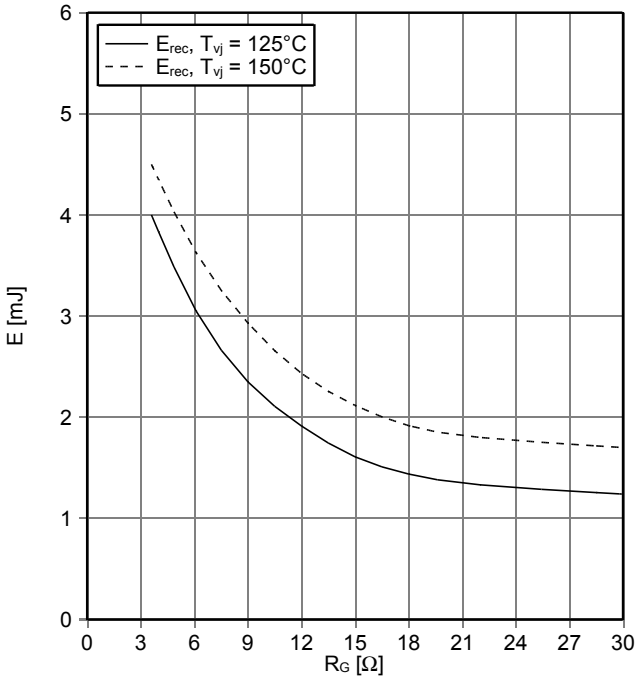

瞬态热阻抗 二极管, 三电平
transient thermal impedance Diode, 3-Level
$Z_{thJC} = f(t)$

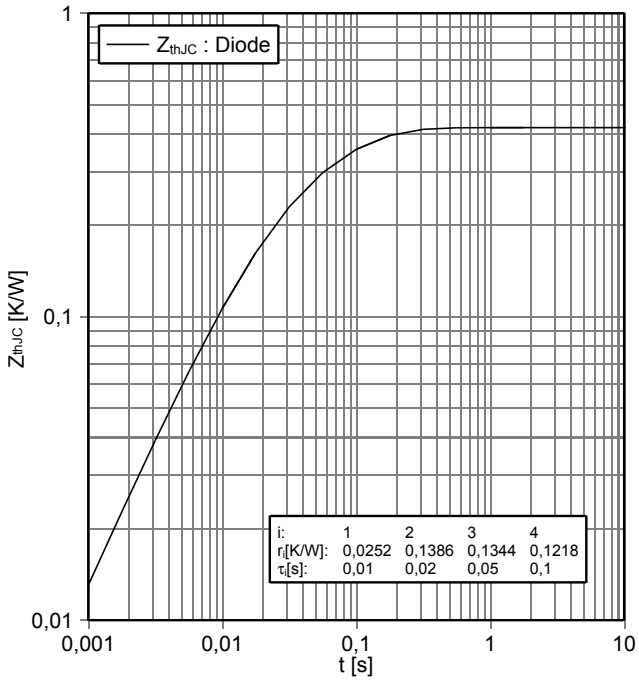

负温度系数热敏电阻 温度特性
NTC-Thermistor-temperature characteristic (typical)
R = f (T)

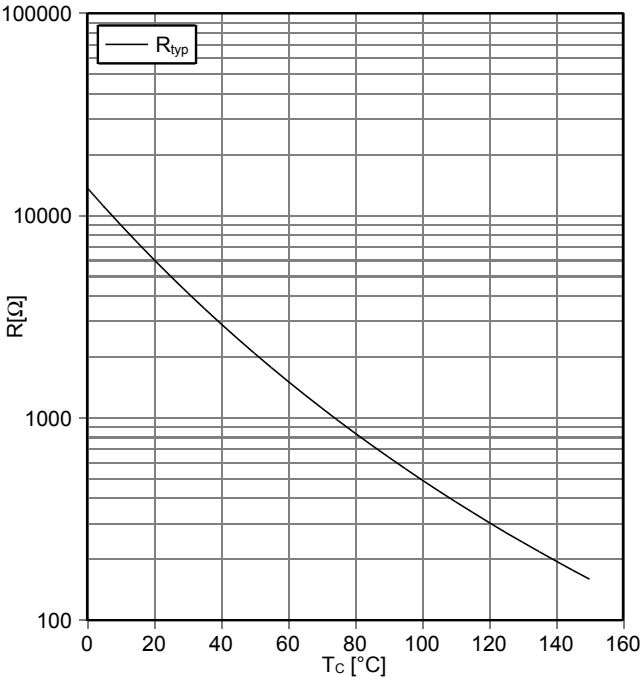

prepared by: AS	date of publication: 2013-11-05
approved by: MK	revision: 2.0

初步数据
Preliminary Data

接线图 / circuit_diagram_headline

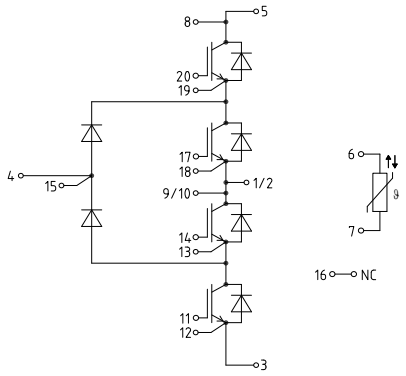

封装尺寸 / package outlines

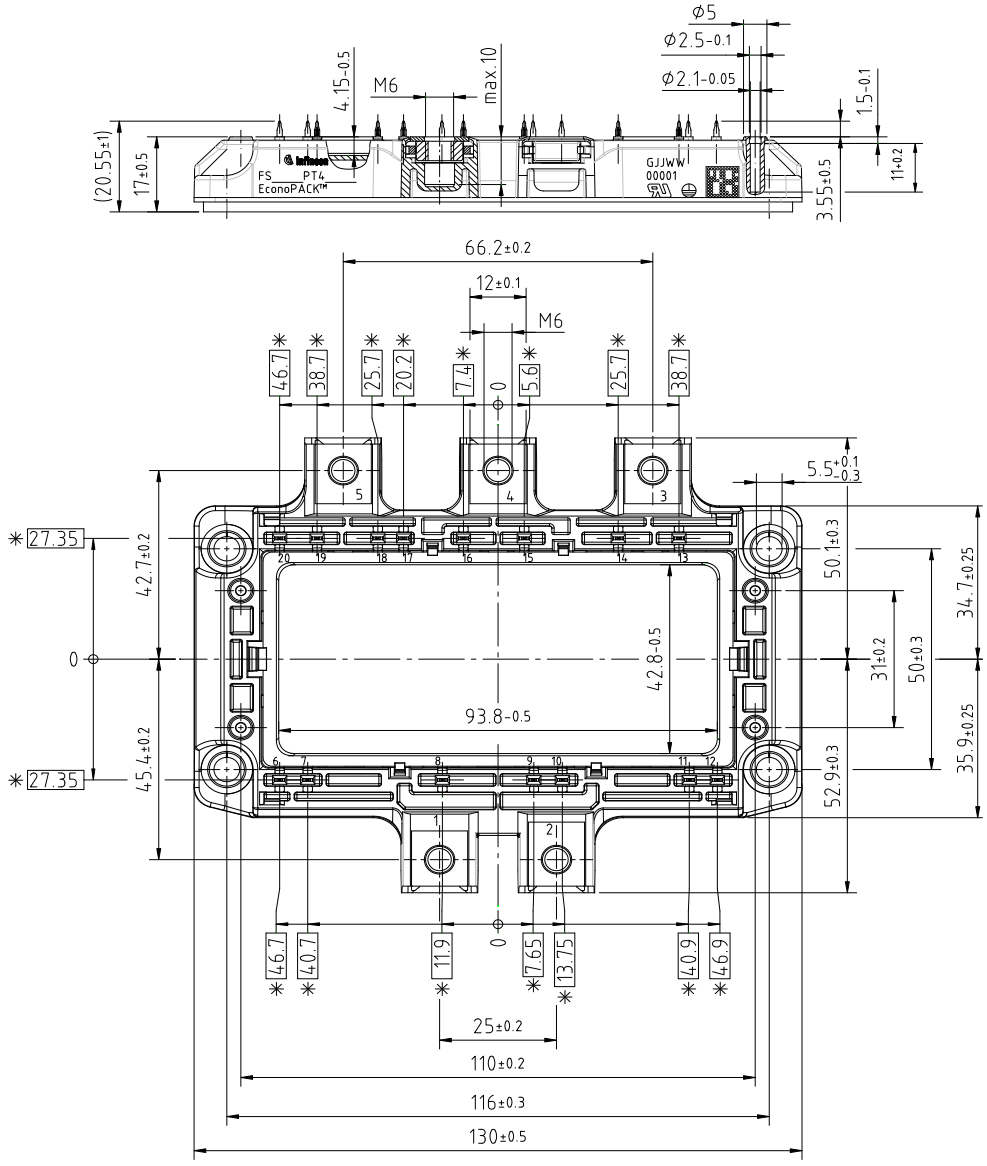

✳ = alle Maße mit einer Toleranz von ⊕ Ø0.4

prepared by: AS	date of publication: 2013-11-05
approved by: MK	revision: 2.0

初步数据
Preliminary Data

使用条件和条款

使用条件和条款
产品规格书中的数据是专门为技术人员提供的，您和您的技术部门应该针对您的应用来评估产品及产品的所有参数是否适合

产品规格书中所描述的产品特性是被保证的，任何这种保证严格依照供货协议中所涉及的条件和条款。除此之外，产品和产品的特性没有任何的保证
请注意安装及应用指南中的信息。

如果您有超出规格书所提供的产品信息的要求或者对我们的产品针对的特殊应用有疑虑的话，请联系我们负责你的销售部门（详情查询 www.infineon.com ）。对那些特别感兴趣的问题我们将提供相应的应用手册
由于技术需要，我们的产品可能含有危险物质。如果需要查询类似问题请联系我们负责你的销售部门
如果您想将我们的产品用于航天，健康，危及生命或者生命维持等应用，请申明。
请注意，对这类应用我们强烈建议
-执行联合的风险和质量评估
-得到质量协议的结论
- 建立联合的测试和出厂产品检查， 我们可以根据测试的实际情况供货
如果有必要，请根据实际需要将类似的说明给你的客户
保留产品规格书的修改权

Terms & Conditions of usage

The data contained in this product data sheet is exclusively intended for technically trained staff. You and your technical departments will have to evaluate the suitability of the product for the intended application and the completeness of the product data with respect to such application.

This product data sheet is describing the characteristics of this product for which a warranty is granted. Any such warranty is granted exclusively pursuant the terms and conditions of the supply agreement. There will be no guarantee of any kind for the product and its characteristics. The information in the valid application- and assembly notes of the module must be considered.

Should you require product information in excess of the data given in this product data sheet or which concerns the specific application of our product, please contact the sales office, which is responsible for you (see www.infineon.com). For those that are specifically interested we may provide application notes.

Due to technical requirements our product may contain dangerous substances. For information on the types in question please contact the sales office, which is responsible for you.

Should you intend to use the Product in aviation applications, in health or live endangering or life support applications, please notify. Please note, that for any such applications we urgently recommend
- to perform joint Risk and Quality Assessments;
- the conclusion of Quality Agreements;
- to establish joint measures of an ongoing product survey, and that we may make delivery depended on the realization of any such measures.

If and to the extent necessary, please forward equivalent notices to your customers.

Changes of this product data sheet are reserved.

prepared by: AS	date of publication: 2013-11-05
approved by: MK	revision: 2.0