TVS Diodes

Transient Voltage Suppressor Diodes

ESD8V0R1B Series

Bi-directional Low Capacitance TVS Diode

ESD8V0R1B-02EL
ESD8V0R1B-02ELS

Data Sheet

Revision 2.0, 2010-12-15
Final

Industrial and Multi-Market

Edition 2010-12-15

Published by
Infineon Technologies AG
81726 Munich, Germany

© 2010 Infineon Technologies AG
All Rights Reserved.

Legal Disclaimer

The information given in this document shall in no event be regarded as a guarantee of conditions or characteristics. With respect to any examples or hints given herein, any typical values stated herein and/or any information regarding the application of the device, Infineon Technologies hereby disclaims any and all warranties and liabilities of any kind, including without limitation, warranties of non-infringement of intellectual property rights of any third party.

Information

For further information on technology, delivery terms and conditions and prices, please contact the nearest Infineon Technologies Office (**www.infineon.com**).

Warnings

Due to technical requirements, components may contain dangerous substances. For information on the types in question, please contact the nearest Infineon Technologies Office.

Infineon Technologies components may be used in life-support devices or systems only with the express written approval of Infineon Technologies, if a failure of such components can reasonably be expected to cause the failure of that life-support device or system or to affect the safety or effectiveness of that device or system. Life support devices or systems are intended to be implanted in the human body or to support and/or maintain and sustain and/or protect human life. If they fail, it is reasonable to assume that the health of the user or other persons may be endangered.

Revision History	
Page or Item	**Subjects (major changes since previous revision)**
Revision 1.0, 2010-10-20	
Revision 2.0, 2010-12-15	
	Carrier Tape drawing for TSSLP-2-2 Package updated

Trademarks of Infineon Technologies AG

AURIX™, BlueMoon™, COMNEON™, C166™, CROSSAVE™, CanPAK™, CIPOS™, CoolMOS™, CoolSET™, CORECONTROL™, DAVE™, EasyPIM™, EconoBRIDGE™, EconoDUAL™, EconoPACK™, EconoPIM™, EiceDRIVER™, EUPEC™, FCOS™, HITFET™, HybridPACK™, ISOFACE™, I²RF™, IsoPACK™, MIPAQ™, ModSTACK™, my-d™, NovalithIC™, OmniTune™, OptiMOS™, ORIGA™, PROFET™, PRO-SIL™, PRIMARION™, PrimePACK™, RASIC™, ReverSave™, SatRIC™, SIEGET™, SINDRION™, SMARTi™, SmartLEWIS™, TEMPFET™, thinQ!™, TriCore™, TRENCHSTOP™, X-GOLD™, XMM™, X-PMU™, XPOSYS™.

Other Trademarks

Advance Design System™ (ADS) of Agilent Technologies, AMBA™, ARM™, MULTI-ICE™, PRIMECELL™, REALVIEW™, THUMB™ of ARM Limited, UK. AUTOSAR™ is licensed by AUTOSAR development partnership. Bluetooth™ of Bluetooth SIG Inc. CAT-iq™ of DECT Forum. COLOSSUS™, FirstGPS™ of Trimble Navigation Ltd. EMV™ of EMVCo, LLC (Visa Holdings Inc.). EPCOS™ of Epcos AG. FLEXGO™ of Microsoft Corporation. FlexRay™ is licensed by FlexRay Consortium. HYPERTERMINAL™ of Hilgraeve Incorporated. IEC™ of Commission Electrotechnique Internationale. IrDA™ of Infrared Data Association Corporation. ISO™ of INTERNATIONAL ORGANIZATION FOR STANDARDIZATION. MATLAB™ of MathWorks, Inc. MAXIM™ of Maxim Integrated Products, Inc. MICROTEC™, NUCLEUS™ of Mentor Graphics Corporation. Mifare™ of NXP. MIPI™ of MIPI Alliance, Inc. MIPS™ of MIPS Technologies, Inc., USA. muRata™ of MURATA MANUFACTURING CO., MICROWAVE OFFICE™ (MWO) of Applied Wave Research Inc., OmniVision™ of OmniVision Technologies, Inc. Openwave™ Openwave Systems Inc. RED HAT™ Red Hat, Inc. RFMD™ RF Micro Devices, Inc. SIRIUS™ of Sirius Sattelite Radio Inc. SOLARIS™ of Sun Microsystems, Inc. SPANSION™ of Spansion LLC Ltd. Symbian™ of Symbian Software Limited. TAIYO YUDEN™ of Taiyo Yuden Co. TEAKLITE™ of CEVA, Inc. TEKTRONIX™ of Tektronix Inc. TOKO™ of TOKO KABUSHIKI KAISHA TA. UNIX™ of X/Open Company Limited. VERILOG™, PALLADIUM™ of Cadence Design Systems, Inc. VLYNQ™ of Texas Instruments Incorporated. VXWORKS™, WIND RIVER™ of WIND RIVER SYSTEMS, INC. ZETEX™ of Diodes Zetex Limited.

Last Trademarks Update 2010-06-09

Table of Contents

Table of Contents 4

List of Figures 5

List of Tables 6

1 Bi-directional Low Capacitance TVS Diode 7

1.1 Features 7

1.2 Application Examples 7

2 Product Description 7

3 Characteristics 8

3.1 Electrical Characteristics at T_A = 25 °C, unless otherwise specified 8

3.2 Typical Performance characteristics at T_A = 25 °C, unless otherwise specified 10

4 Application Information 12

5 Ordering information scheme 13

6 Package Information 14

6.1 PG-TSLP-2-18 14

6.2 PG-TSSLP-2-2 15

Terminology 16

List of Figures

Figure 1 a) Pin Configuration and b) Schematic Diagram 7
Figure 2 Definitions of electrical characteristics 8
Figure 3 Non-repetitive peak pulse power: $P_{pk} = f(t_p)$ 10
Figure 4 Power derating curve: $P_{pk} = f(T_A)$ 10
Figure 5 Reverse characteristic, $I_R = (V_R)$, T_A = parameter 11
Figure 6 Line capacitance $C_L = f(V_R)$ 11
Figure 7 1 Line, bi-directional protection with ESD diode 12
Figure 8 Ordering Information Scheme (examples) 13
Figure 9 PG-TSLP-2-18: Package Overview 14
Figure 10 PG-TSLP-2-18: Footprint 14
Figure 11 PG-TSLP-2-18: Packing 14
Figure 12 PG-TSLP-2-18: Marking (example) 14
Figure 13 PG-TSSLP-2-2: Package Overview 15
Figure 14 PG-TSSLP-2-2: Footprint 15
Figure 15 PG-TSSLP-2-2: Packing 15
Figure 16 PG-TSSLP-2-2: Marking (example) 15

List of Tables

Table 1 Ordering information 7
Table 2 Maximum Rating at T_A = 25 °C, unless otherwise specified 8
Table 3 DC characteristics at T_A = 25 °C, unless otherwise specified 8
Table 4 RF characteristics at T_A = 25 °C, unless otherwise specified 9
Table 5 ESD characteristics at T_A = 25 °C, unless otherwise specified 9

1 Bi-directional Low Capacitance TVS Diode

1.1 Features

- ESD / Transient protection of data lines in 3.3 / 5 / 12 V applications according to :
  - IEC61000-4-2 (ESD) : ±20 kV (air) and ±18 kV (contact)
  - IEC61000-4-4 (EFT) : 40 A (5/50ns)
- Extremely small form factor down to 0.62 x 0.32 x 0.31 mm²
- Maximum working voltage: V_{RWM} = -8 / +14 V
- Very low reverse current: I_R < 1 nA (typical)
- Very low series inducttance down to : L_S = 0.2 nH (typical)
- Low capacitance C_L = 4 pF I/O to GND (typical)
- Pb-free and Halogen-Free package (RoHS compliant)

1.2 Application Examples

- Keypad, touchpad, buttons, convenience keys
- LCD displays, Camera, audio lines, mobile communication, Consumer products (E-Book, MP3, DVD, DSC, ...)
- Notebooks tablets and desktop computers and their peripherals

2 Product Description

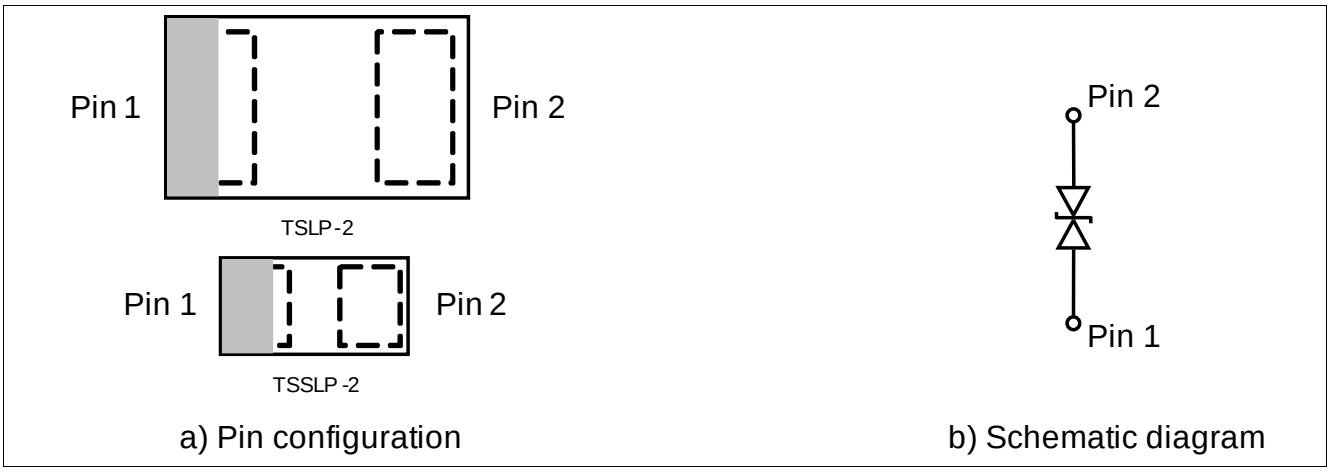

Figure 1 a) Pin Configuration and b) Schematic Diagram

Table 1 Ordering information

Type	Package	Configuration	Marking code
ESD8V0R1B-02EL	PG-TSLP-2-18	1 line, bi-directional	R
ESD8V0R1B-02ELS	PG-TSSLP-2-2	1 line, bi-directional	D

3 Characteristics

Table 2 Maximum Rating at T_A = 25 °C, unless otherwise specified

Parameter	Symbol	Values			Unit
		Min.	Typ.	Max.	
ESD air discharge[1)]	V_{ESD}	-20	–	20	kV
ESD contact discharge[1)]	V_{ESD}	-18	–	18	kV
Peak pulse current (t_p = 8/20 µs)[2)]	I_{PP}	-1	–	1	A
Operating temperature	T_{OP}	-55	–	150	°C
Storage temperage	T_{stg}	-65	–	150	°C

1) V_{ESD} according to IEC61000-4-2

2) I_{PP} according to IEC61000-4-5

3.1 Electrical Characteristics at T_A = 25 °C, unless otherwise specified

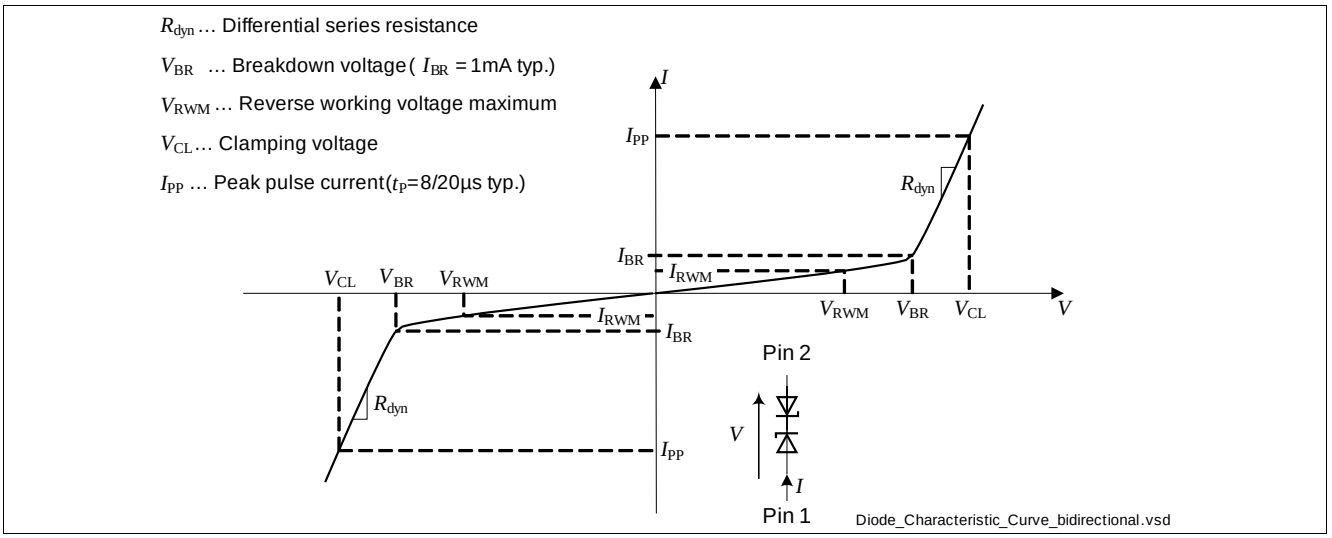

Figure 2 Definitions of electrical characteristics

Table 3 DC characteristics at T_A = 25 °C, unless otherwise specified

Parameter	Symbol	Values			Unit	Note / Test Condition
		Min.	Typ.	Max.		
Reverse working voltage	V_{RWM}	-8	–	14	V	from Pin2 to Pin1
Breakdown voltage	V_{BR}	8.5	11	14	V	I_R = 1 mA, from Pin1 to Pin2
Breakdown voltage	V_{BR}	14.5	17	20	V	I_R = 1 mA, from Pin2 to Pin1
Reverse current	I_R	–	<1	50	nA	V_R = 3.3 V

Table 4 RF characteristics at T_A = 25 °C, unless otherwise specified

Parameter	Symbol	Values			Unit	Note / Test Condition
		Min.	Typ.	Max.		
Line capacitance	C_L	–	4	7	pF	V_R = 0 V, f = 1 MHz, I/O to GND
Serie inductance	L_S	–	0.4	–	nH	ESD8V0R1B-02EL
	L_S	–	0.2	–	nH	ESD8V0R1B-02ELS

Table 5 ESD characteristics at T_A = 25 °C, unless otherwise specified

Parameter	Symbol	Values			Unit	Note / Test Condition
		Min.	Typ.	Max.		
Clamping voltage[1)]	V_{CL}	–	17	22	V	I_{PP} = 1 A from Pin1 to Pin2
	V_{CL}	–	23	28	V	I_{PP} = 1 A from Pin2 to Pin1

1) According to IEC61000-4-5 (t_p : 8 / 20 µs)

3.2 Typical Performance characteristics at T_A = 25 °C, unless otherwise specified

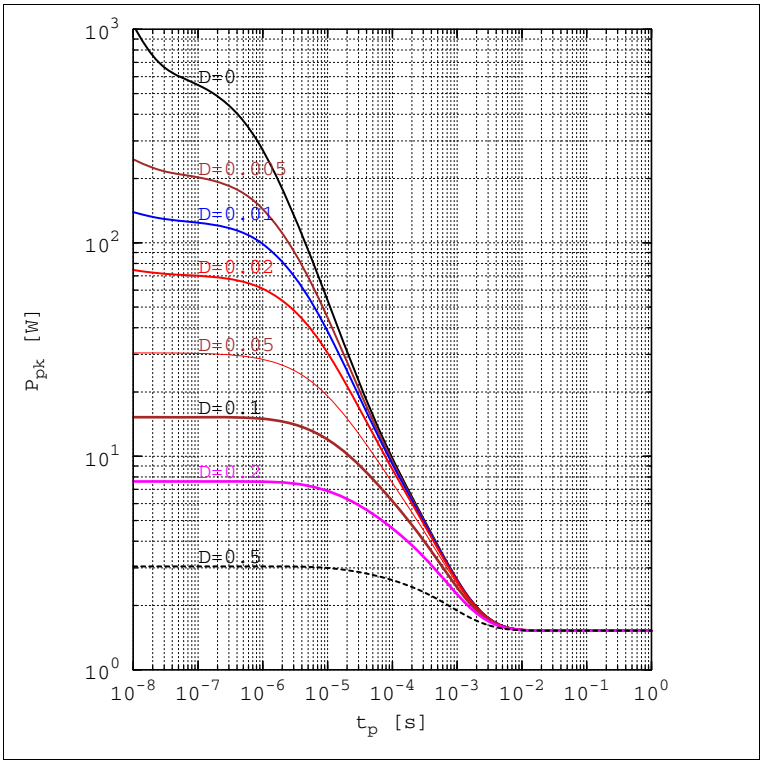

Figure 3 Non-repetitive peak pulse power: $P_{pk} = f(t_p)$

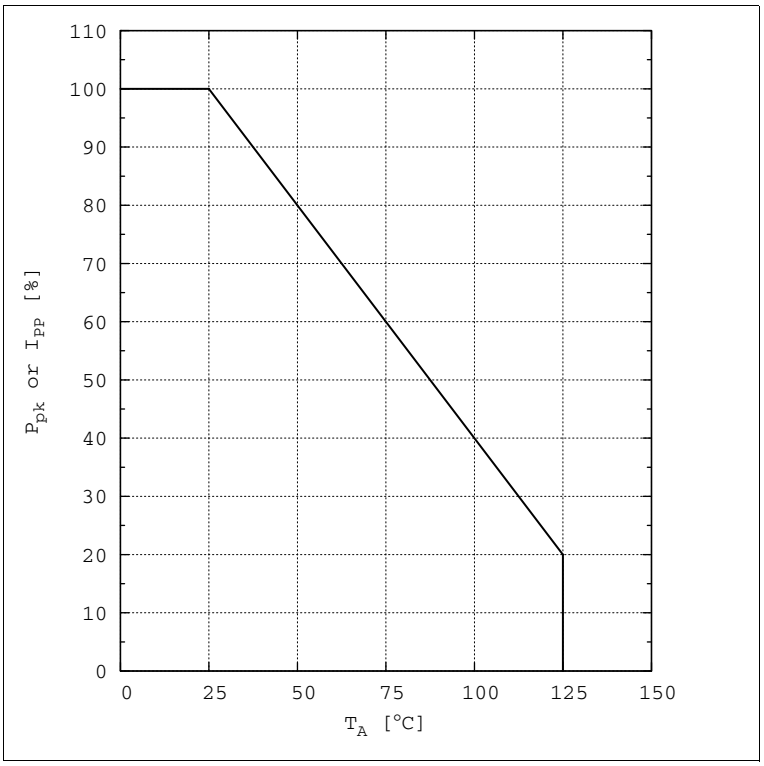

Figure 4 Power derating curve: $P_{pk} = f(T_A)$

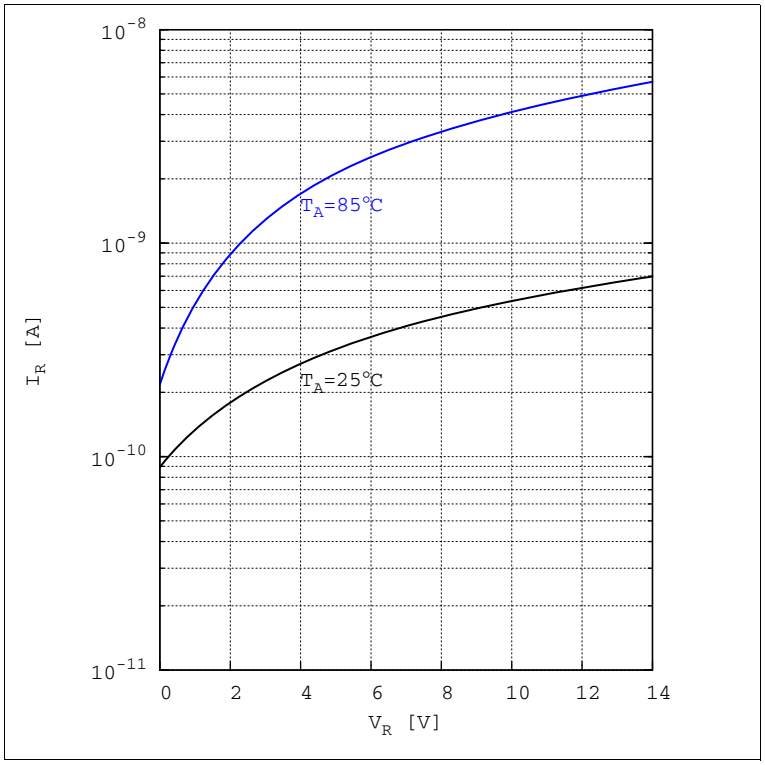

Figure 5 Reverse characteristic, $I_R = (V_R)$, T_A = parameter

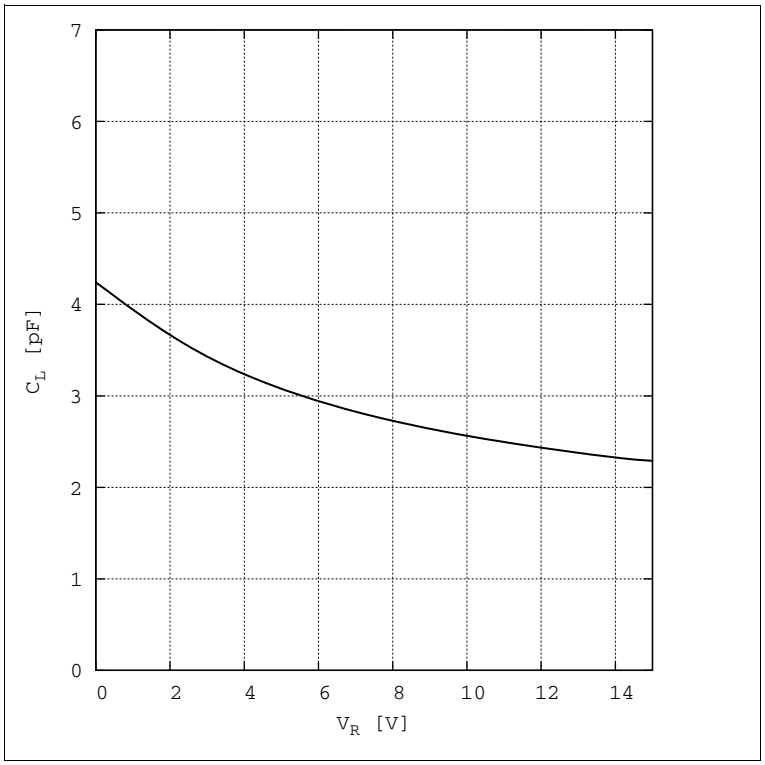

Figure 6 Line capacitance $C_L = f(V_R)$

4 Application Information

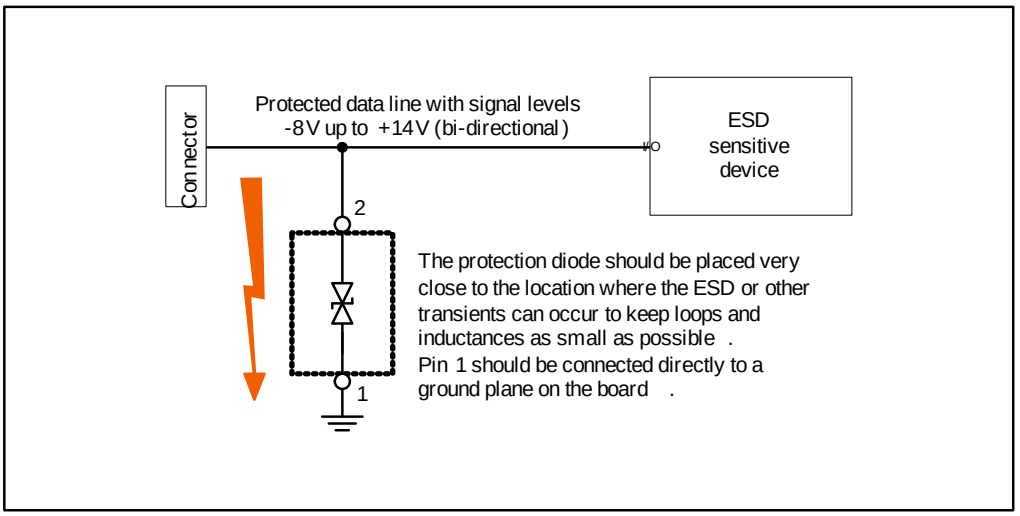

Figure 7 1 Line, bi-directional protection with ESD diode

5 Ordering information scheme

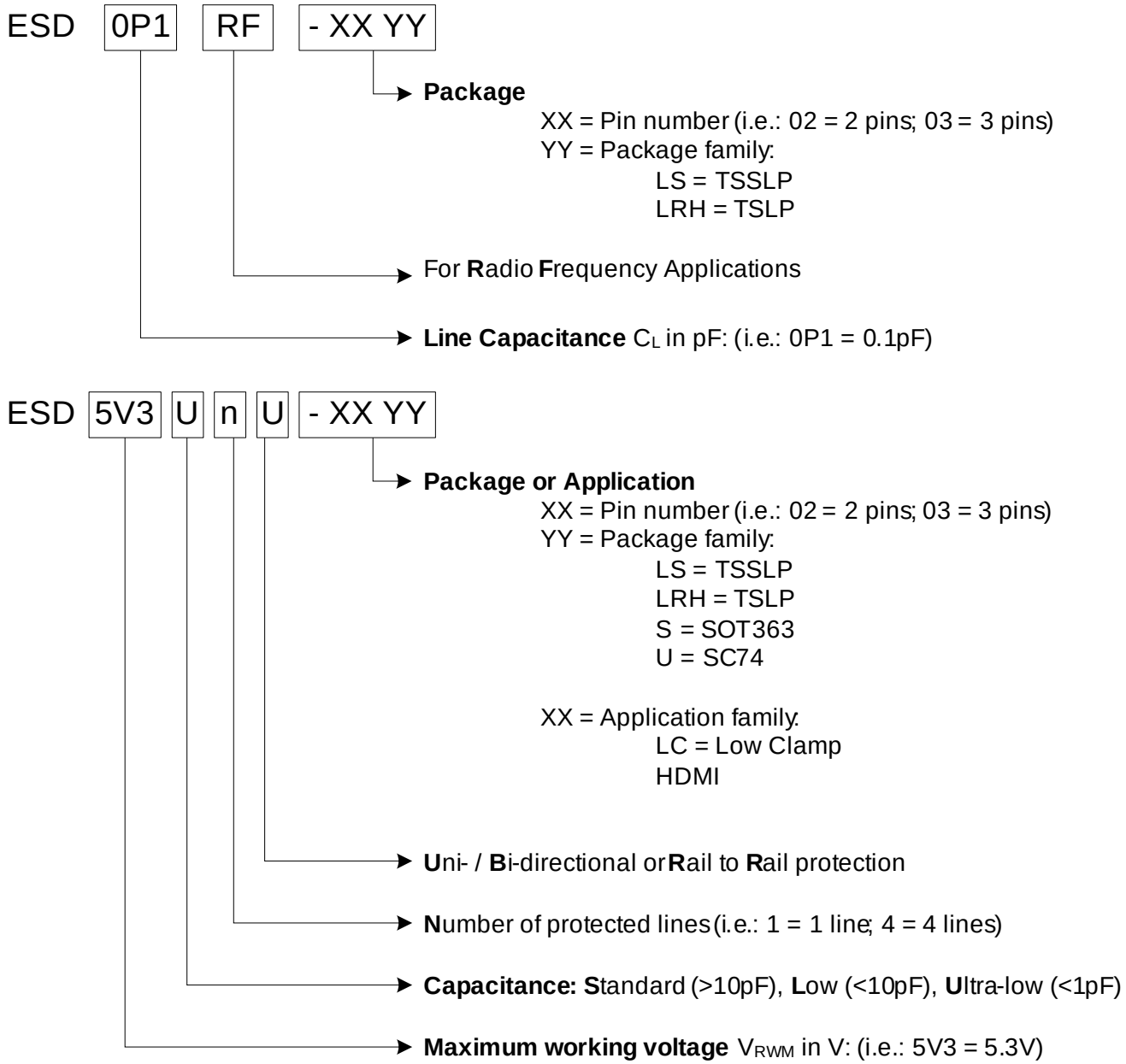

Figure 8 Ordering Information Scheme (examples)

6 Package Information

6.1 PG-TSLP-2-18

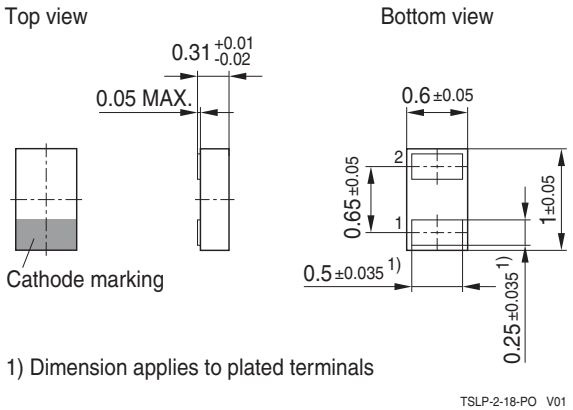

Figure 9 PG-TSLP-2-18: Package Overview

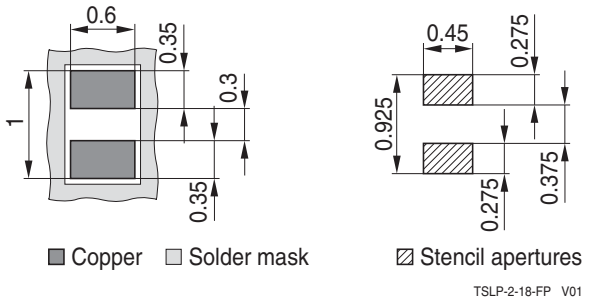

Figure 10 PG-TSLP-2-18: Footprint

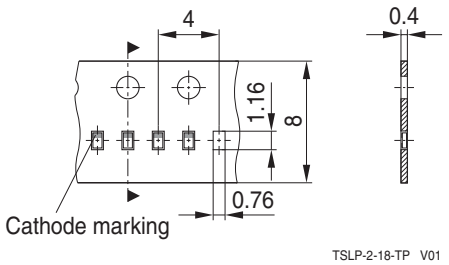

Figure 11 PG-TSLP-2-18: Packing

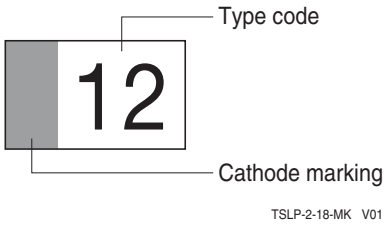

Figure 12 PG-TSLP-2-18: Marking (example)

6.2 PG-TSSLP-2-2

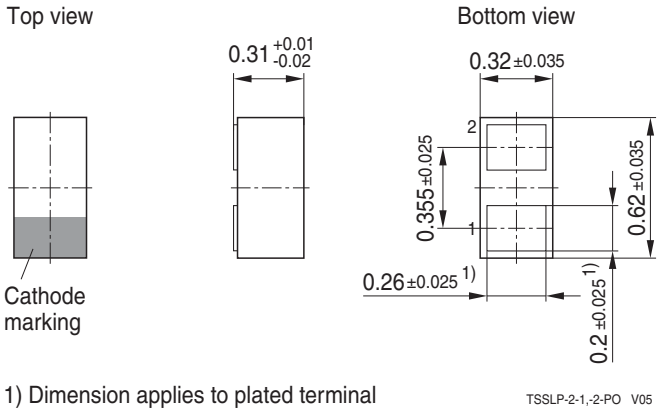

Figure 13 PG-TSSLP-2-2: Package Overview

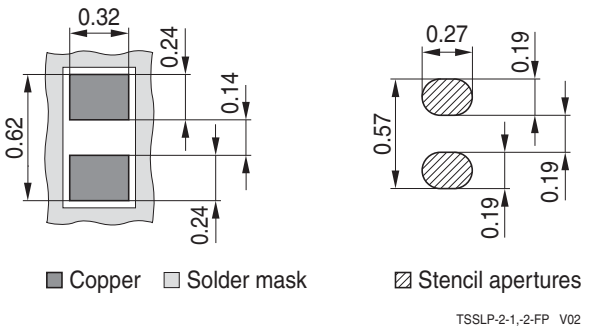

Figure 14 PG-TSSLP-2-2: Footprint

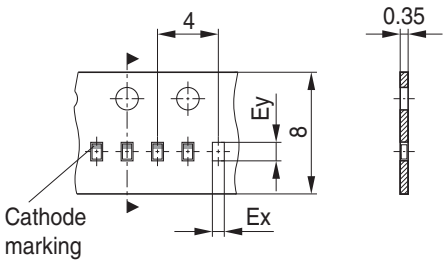

Tape type	Ex	Ey
Punched Tape	0.43	0.73
Embossed Tape	0.37	0.67

Deliveries can be both tape types (no selection possible).
Specification allows identical processing (pick & place) by users.

TSSLP-2-1,-2-TP V03

Figure 15 PG-TSSLP-2-2: Packing

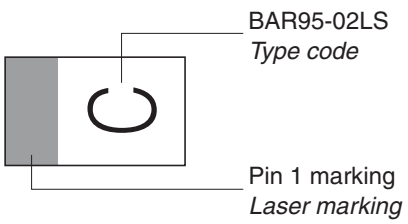

Figure 16 PG-TSSLP-2-2: Marking (example)

Terminology

C_L	Line capacitance
DSC	Digital Still Camera
DVD	Digital Versatile Disc
EFT	Electrical Fast Transient
ESD	Electrostatic Discharge
IEC	International Electrotechnical Commission
I_{PP}	Peak pulse current
I_R	Reverse current
I_{RWM}	Reverse working current maximum
LCD	Liquid Crystal Display
L_S	Serial inductance
MP3	Moving Picture Experts Group III
RoHS	Restriction of Hazardous Substances Directive
T_A	Ambient temperature
T_{OP}	Operation temperature
t_p	Pulse duration
T_{stg}	Storage temperature
V_{CL}	Reverse clamping voltage
V_{ESD}	Electrostatic discharge voltage
V_R	Reverse voltage
V_{RWM}	Reverse working voltage maximum

w w w . i n f i n e o n . c o m

Published by Infineon Technologies AG