TVS Diode

Transient Voltage Suppressor Diodes

ESD3V3XU1U Series

Uni-directional Ultra Low Capacitance ESD / Transient Protection Diode

ESD3V3XU1US
ESD3V3XU1UL

Data Sheet

Revision 1.0, 2011-04-20
Preliminary

Industrial and Multi-Market

Edition 2011-04-20

Published by
Infineon Technologies AG
81726 Munich, Germany

© 2011 Infineon Technologies AG
All Rights Reserved.

Legal Disclaimer

The information given in this document shall in no event be regarded as a guarantee of conditions or characteristics. With respect to any examples or hints given herein, any typical values stated herein and/or any information regarding the application of the device, Infineon Technologies hereby disclaims any and all warranties and liabilities of any kind, including without limitation, warranties of non-infringement of intellectual property rights of any third party.

Information

For further information on technology, delivery terms and conditions and prices, please contact the nearest Infineon Technologies Office (**www.infineon.com**).

Warnings

Due to technical requirements, components may contain dangerous substances. For information on the types in question, please contact the nearest Infineon Technologies Office.

Infineon Technologies components may be used in life-support devices or systems only with the express written approval of Infineon Technologies, if a failure of such components can reasonably be expected to cause the failure of that life-support device or system or to affect the safety or effectiveness of that device or system. Life support devices or systems are intended to be implanted in the human body or to support and/or maintain and sustain and/or protect human life. If they fail, it is reasonable to assume that the health of the user or other persons may be endangered.

Revision History	
Page or Item	**Subjects (major changes since previous revision)**
Revision 1.0, 2011-04-20	

Trademarks of Infineon Technologies AG

AURIX™, BlueMoon™, C166™, CanPAK™, CIPOS™, CIPURSE™, COMNEON™, EconoPACK™, CoolMOS™, CoolSET™, CORECONTROL™, CROSSAVE™, DAVE™, EasyPIM™, EconoBRIDGE™, EconoDUAL™, EconoPIM™, EiceDRIVER™, eupec™, FCOS™, HITFET™, HybridPACK™, I²RF™, ISOFACE™, IsoPACK™, MIPAQ™, ModSTACK™, my-d™, NovalithIC™, OmniTune™, OptiMOS™, ORIGA™, PRIMARION™, PrimePACK™, PrimeSTACK™, PRO-SIL™, PROFET™, RASIC™, ReverSave™, SatRIC™, SIEGET™, SINDRION™, SIPMOS™, SMARTi™, SmartLEWIS™, SOLID FLASH™, TEMPFET™, thinQ!™, TRENCHSTOP™, TriCore™, X-GOLD™, X-PMU™, XMM™, XPOSYS™.

Other Trademarks

Advance Design System™ (ADS) of Agilent Technologies, AMBA™, ARM™, MULTI-ICE™, KEIL™, PRIMECELL™, REALVIEW™, THUMB™, µVision™ of ARM Limited, UK. AUTOSAR™ is licensed by AUTOSAR development partnership. Bluetooth™ of Bluetooth SIG Inc. CAT-iq™ of DECT Forum. COLOSSUS™, FirstGPS™ of Trimble Navigation Ltd. EMV™ of EMVCo, LLC (Visa Holdings Inc.). EPCOS™ of Epcos AG. FLEXGO™ of Microsoft Corporation. FlexRay™ is licensed by FlexRay Consortium. HYPERTERMINAL™ of Hilgraeve Incorporated. IEC™ of Commission Electrotechnique Internationale. IrDA™ of Infrared Data Association Corporation. ISO™ of INTERNATIONAL ORGANIZATION FOR STANDARDIZATION. MATLAB™ of MathWorks, Inc. MAXIM™ of Maxim Integrated Products, Inc. MICROTEC™, NUCLEUS™ of Mentor Graphics Corporation. Mifare™ of NXP. MIPI™ of MIPI Alliance, Inc. MIPS™ of MIPS Technologies, Inc., USA. muRata™ of MURATA MANUFACTURING CO., MICROWAVE OFFICE™ (MWO) of Applied Wave Research Inc., OmniVision™ of OmniVision Technologies, Inc. Openwave™ Openwave Systems Inc. RED HAT™ Red Hat, Inc. RFMD™ RF Micro Devices, Inc. SIRIUS™ of Sirius Satellite Radio Inc. SOLARIS™ of Sun Microsystems, Inc. SPANSION™ of Spansion LLC Ltd. Symbian™ of Symbian Software Limited. TAIYO YUDEN™ of Taiyo Yuden Co. TEAKLITE™ of CEVA, Inc. TEKTRONIX™ of Tektronix Inc. TOKO™ of TOKO KABUSHIKI KAISHA TA. UNIX™ of X/Open Company Limited. VERILOG™, PALLADIUM™ of Cadence Design Systems, Inc. VLYNQ™ of Texas Instruments Incorporated. VXWORKS™, WIND RIVER™ of WIND RIVER SYSTEMS, INC. ZETEX™ of Diodes Zetex Limited.

Last Trademarks Update 2010-10-26

Predefined Names

Name	Initial Cross-Reference
X-GOLD	**X-GOLD**
XMM	**XMM**

Definition of “Predefined Names”

Frequently used expressions, such as component names, file names, tools releases, version numbers, proprietary variables and software links, can be used in a similar way as user variables. However, they must be listed in a special table and **not** in the standard file “Variables”.

Correct Usage

Steps:

1. Insert all expressions into the left column of the above table.
2. Insert an initial Cross-Reference into the right column of the same row. The initial Cross-Reference is necessary to ensure that a single ID is used in all your documents using the “Predefined_Names.fm” file (Example: **X-GOLD** has the unique ID = CHDGHJGH).
3. Insert a Cross-Reference (Element “CrossReference”) into your document to the Element Identifier of the “Predefined_Names.fm” file. Set the output format of the Cross-Reference to “Variable” (example: X-GOLD).

Notes

1. *All documents in a project (such as XMM) and within a book should use the same file “Predefined Names”. This allows copying content between different documents. For this reason, local versions of “Predefined Names” must not be produced.*
2. *New definitions must be inserted in a new row. Never change existing definitions, as they might be used in other documents.*
3. *This file does not need to be included in your book, but it must be in the fm sub-folder of your document.*
4. *You can sort the above table with FrameMaker only if the initial cross-reference in the right column has been properly inserted. Otherwise, the table may only be sorted by hand, as the cross-references to your document would get lost.*

Table of Contents

Predefined Names 4
Table of Contents 5
List of Figures 6
List of Tables 7
1 Uni-directional Ultra Low Capacitance ESD / Transient Protection Diode 8
1.1 Features 8
1.2 Application Examples 8
2 Product Description 8
3 Characteristics 9
3.1 Electrical Characteristics at T_A = 25 °C, unless otherwise specified 9
3.2 Typical Characteristics at T_A=25°C, unless otherwise specified 11
4 Application Information 13
5 Package Information 14
5.1 PG-TSSLP-2-1 (mm) [3] 14
6 Package Information 15
6.1 PG-TSLP-2-17 (mm)[3] 15
References 16
Terminology 17

List of Figures

Figure 2-1 Pin Configuration and Schematic Diagram 8
Figure 3-1 Definitions of electrical characteristics 9
Figure 3-2 Reverse current, $I_R = (V_R)$ 11
Figure 3-3 Reverse current $I_R = f(T_A)$, V_R = 3.3 V 11
Figure 3-4 Line capacitance $C_L = f(V_R)$, f = 1MHz, from pin 1 to pin 2 12
Figure 3-5 Clamping voltage $V_{TLP} = f(I_{TLP})$, from pin 1 to pin 2 Note: [2] 12
Figure 3-6 Forward clamping voltage $V_{TLP} = f(I_{TLP})$, from pin 2 to pin 1 Note: [2] 13
Figure 4-1 Single line, uni-directional ESD / Transient protection 13
Figure 5-1 PG-TSSLP-2-1: Package overview 14
Figure 5-2 PG-TSSLP-2-1: Footprint 14
Figure 5-3 PG-TSSLP-2-1: Packing 14
Figure 5-4 PG-TSSLP-2-1: Marking (example) 14
Figure 6-1 PG-TSLP-2-17: Package overview 15
Figure 6-2 PG-TSLP-2-17: Footprint 15
Figure 6-3 PG-TSLP-2-17: Packing 15
Figure 6-4 PG-TSLP-2-17: Marking (example) 15

List of Tables

Table 2-1 Ordering Information 8
Table 3-1 Maximum Rating at T_A = 25 °C, unless otherwise specified 9
Table 3-2 DC Characteristics at T_A = 25 °C, unless otherwise specified 9
Table 3-3 RF Characteristics at T_A = 25 °C, unless otherwise specified 10
Table 3-4 ESD Characteristics at T_A = 25 °C, unless otherwise specified 10

1 Uni-directional Ultra Low Capacitance ESD / Transient Protection Diode

1.1 Features

- ESD / transient protection of high speed data lines exceeding
  - IEC61000-4-2 (ESD): ±20 kV (air / contact)
  - IEC61000-4-4 (EFT): 2.5 kV / 50 A (5/50 ns)
  - IEC61000-4-5 (surge): 3 A (8/20 µs)
- Maximum working voltage: V_{RWM} = 3.3 V
- Ultra low capacitance C_L = 0.4 pF (typical)
- Very low clamping voltage: V_{CL}= 8 V at I_{PP} = 16 A (typical)
- Very low dynamic resistance: R_{DYN} = 0.19 Ω (typical)
- Pb-free and halogen-free package (RoHS compliant)

1.2 Application Examples

- USB 3.0, 10/100/1000 Ethernet, Firewire, DVI, HDMI, S-ATA, DisplayPort
- Mobile HDMI Link, MDDI, MIPI, SWP / NFC

2 Product Description

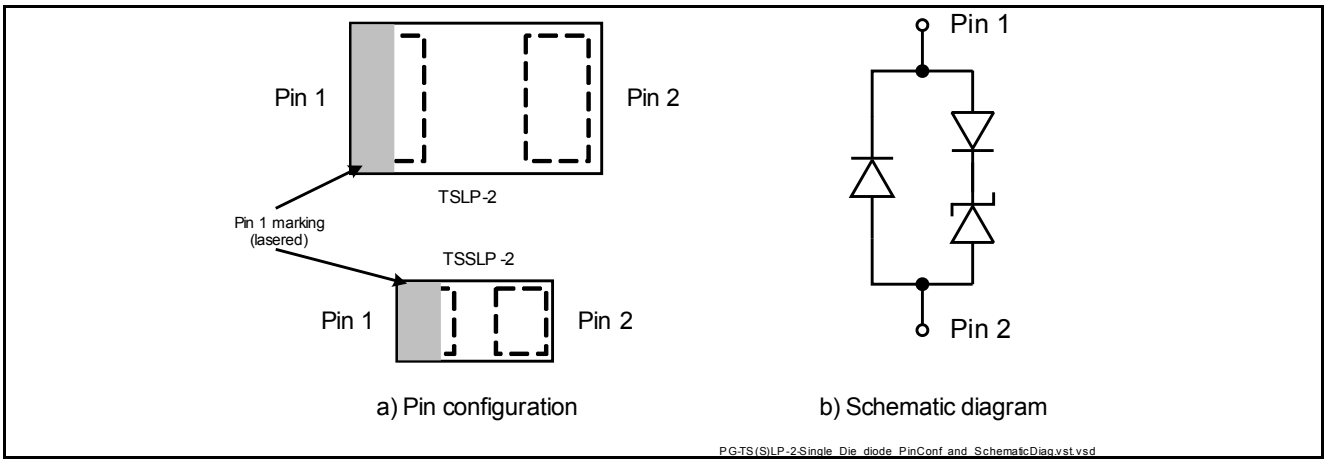

Figure 2-1 Pin Configuration and Schematic Diagram

Table 2-1 Ordering Information

Type	Package	Configuration	Marking code
ESD3V3XU1US	PG-TSSLP-2-1	1 line, uni-directional	tbd
ESD3V3XU1UL	PG-TSLP-2-17	1 line, uni-directional	tbd

3 Characteristics

Table 3-1 Maximum Rating at T_A = 25 °C, unless otherwise specified

Parameter	Symbol	Values			Unit
		Min.	Typ.	Max.	
ESD (air / contact) discharge[1]	V_{ESD}	–	–	20	kV
Peak pulse current (t_p = 8/20 µs)[2]	I_{PP}	–	–	3	A
Operating temperature range	T_{OP}	-40	–	125	°C
Storage temperature	T_{stg}	-65	–	150	°C

1) V_{ESD} according to IEC61000-4-2

2) I_{PP} according to IEC61000-4-5

3.1 Electrical Characteristics at T_A = 25 °C, unless otherwise specified

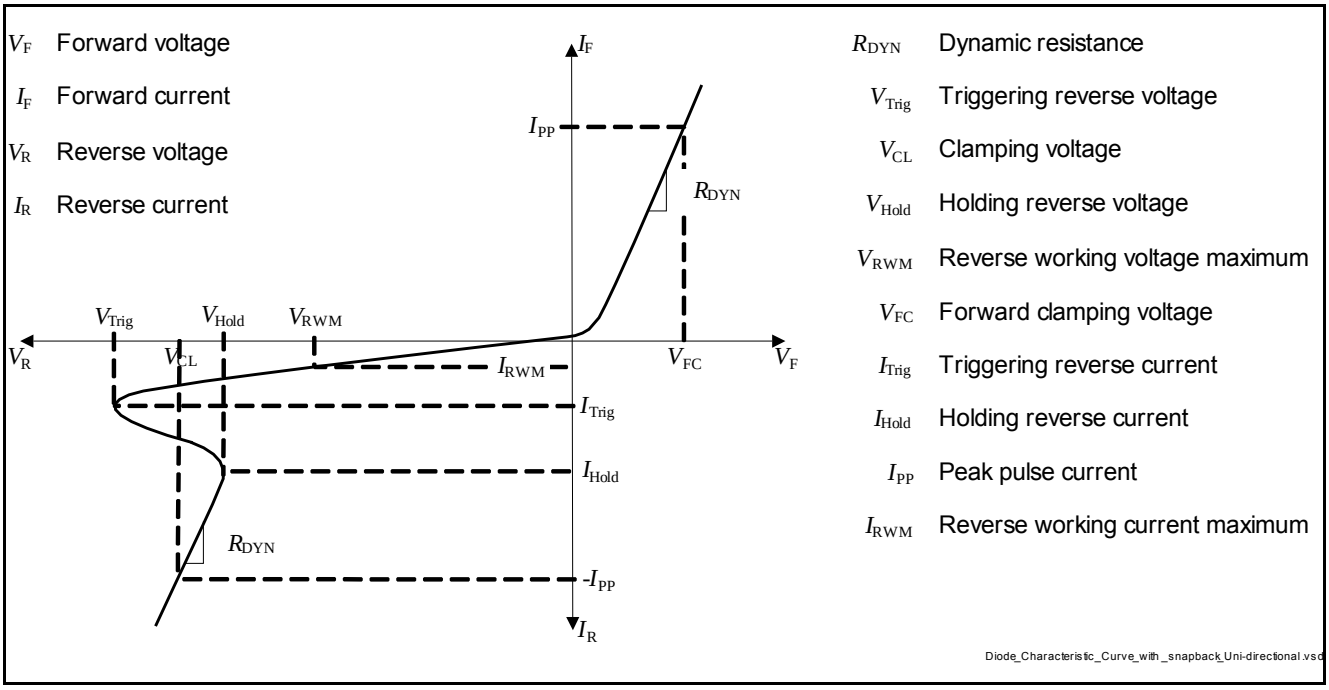

Figure 3-1 Definitions of electrical characteristics

Table 3-2 DC Characteristics at T_A = 25 °C, unless otherwise specified

Parameter	Symbol	Values			Unit	Note / Test Condition
		Min.	Typ.	Max.		
Reverse working voltage	V_{RWM}	–	–	3.3	V	Pin 1 to Pin 2
Reverse current	I_R	–	1	50	nA	V_R = 3.3 V, from Pin 1 to Pin 2

Table 3-3 RF Characteristics at T_A = 25 °C, unless otherwise specified

Parameter	Symbol	Values			Unit	Note / Test Condition
		Min.	Typ.	Max.		
Line capacitance	C_L	–	0.4	0.65	pF	V_R = 0 V, f = 1 MHz
		–	tbd	–	pF	V_R = 0V, f = 1 GHz
Serie inductance	L_S	–	0.2	–	nH	ESD3V3XU1US
		–	0.4	–	nH	ESD3V3XU1UL

Table 3-4 ESD Characteristics at T_A = 25 °C, unless otherwise specified

Parameter	Symbol	Values			Unit	Note / Test Condition
		Min.	Typ.	Max.		
Reverse clamping voltage[1] [2]	V_{CL}	–	8	–	V	I_{PP} = 16 A, from Pin 1 to Pin 2
		–	11	–	V	I_{PP} = 30 A, from Pin 1 to Pin 2
Forward clamping voltage[1] [2]	V_{FC}	–	6	–	V	I_{PP} = 16 A, from Pin 2 to Pin 1
		–	9	–	V	I_{PP} = 30 A, from Pin 2 to Pin 1
Dynamic resistance[1] [2]	R_{DYN}	–	0.19	–	Ω	Pin 1 to Pin 2
		–	0.23	–	Ω	Pin 2 to Pin 1

1) Please refer to Application Note AN210. TLP parameter: Z_0 = 50 Ω , t_p = 100ns, t_r = 300ps, averaging window: t_1 = 30 ns to t_2 = 60 ns, extraction of dynamic resistance using least squares fit of TLP charactertistic between I_{PP1} = 10 A and I_{PP2} = 40 A.

3.2 Typical Characteristics at T_A=25°C, unless otherwise specified

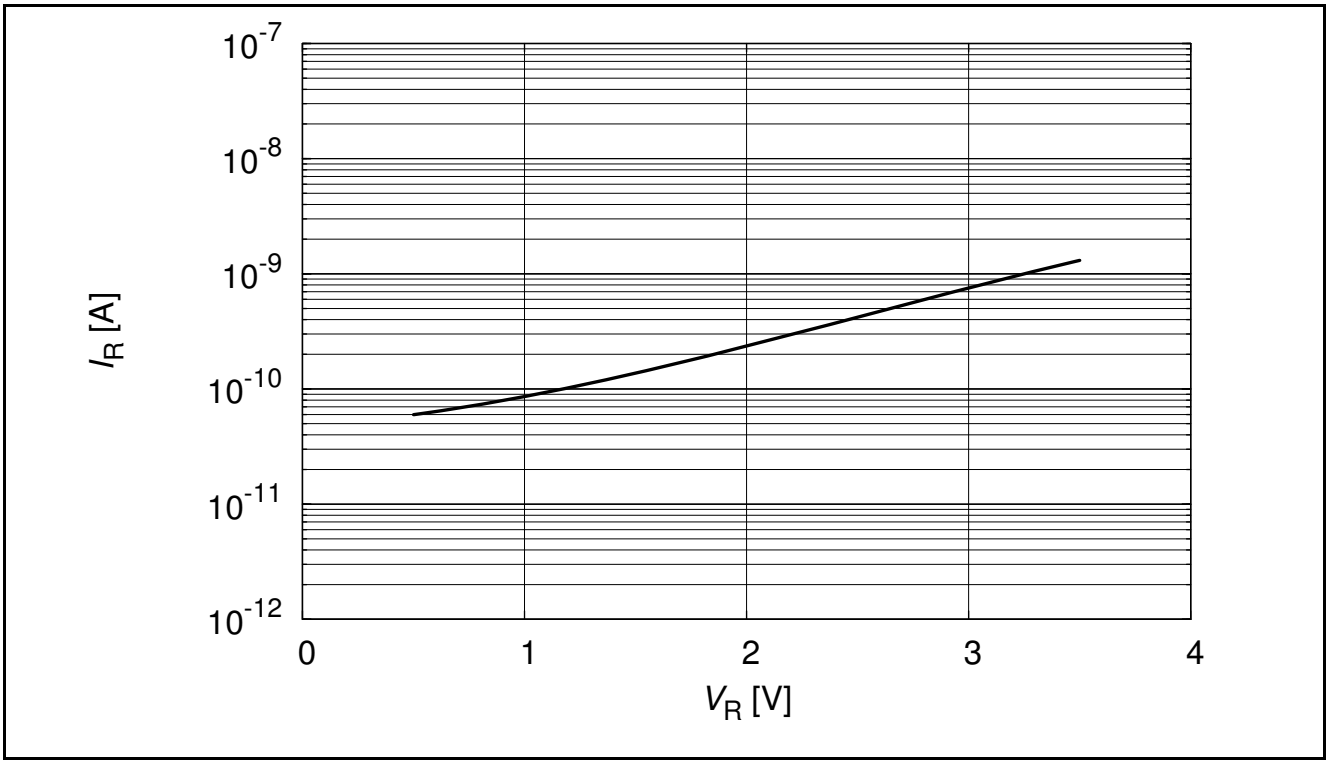

Figure 3-2 Reverse current, $I_R = (V_R)$

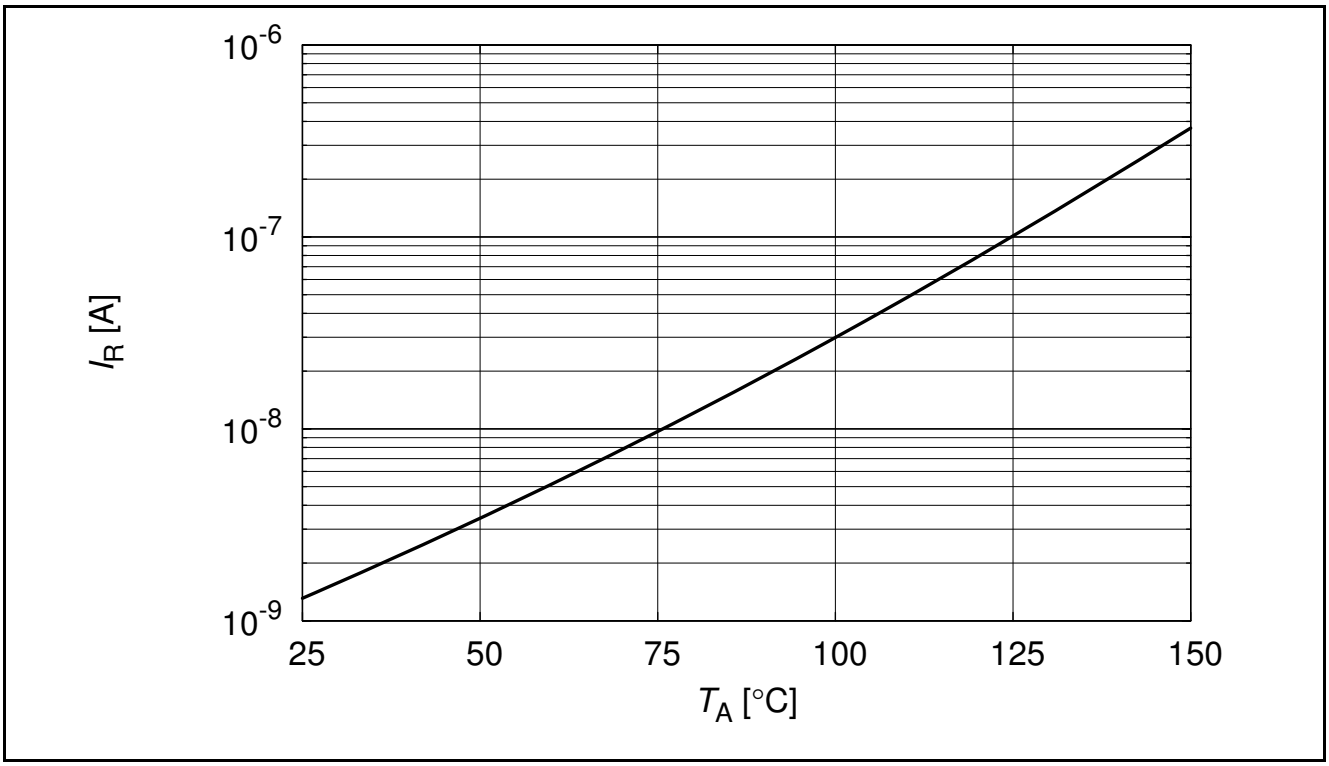

Figure 3-3 Reverse current $I_R = f(T_A)$, V_R = 3.3 V

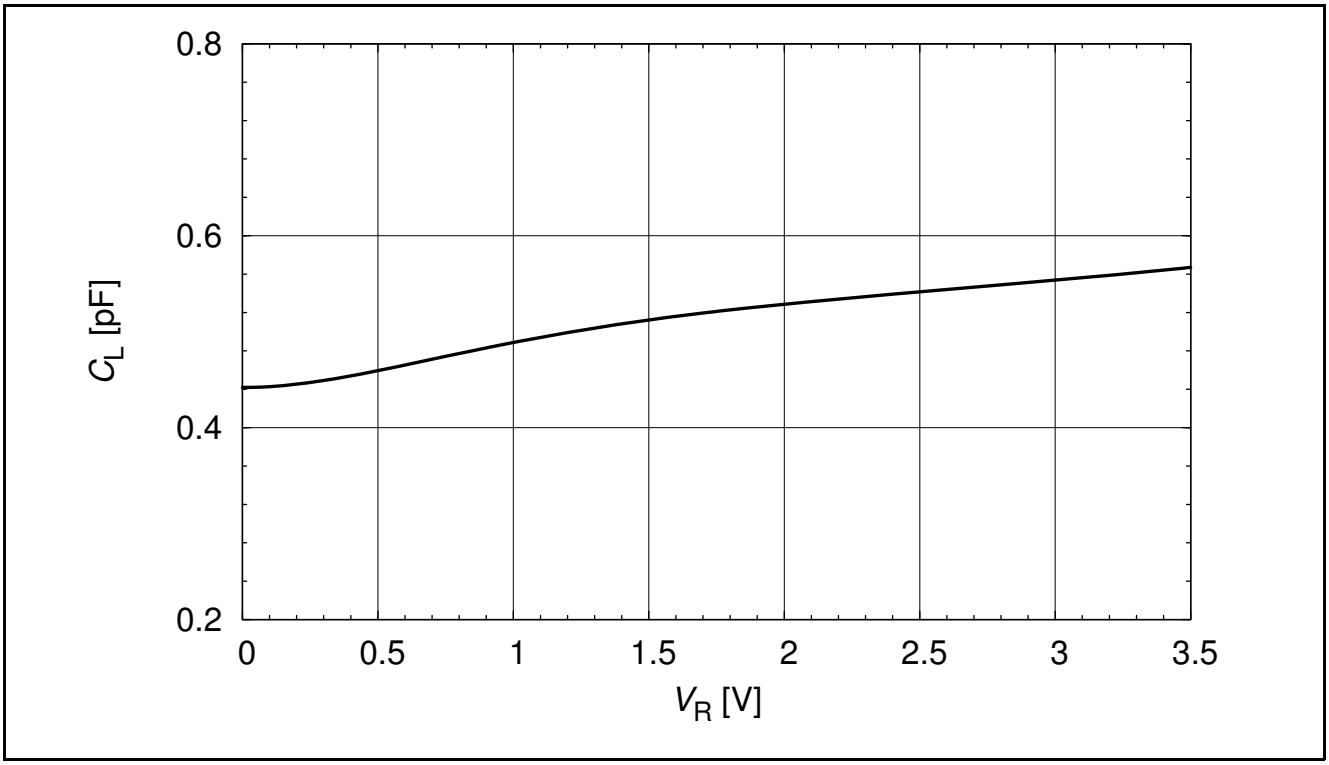

Figure 3-4 Line capacitance $C_L = f(V_R)$, f = 1MHz, from pin 1 to pin 2

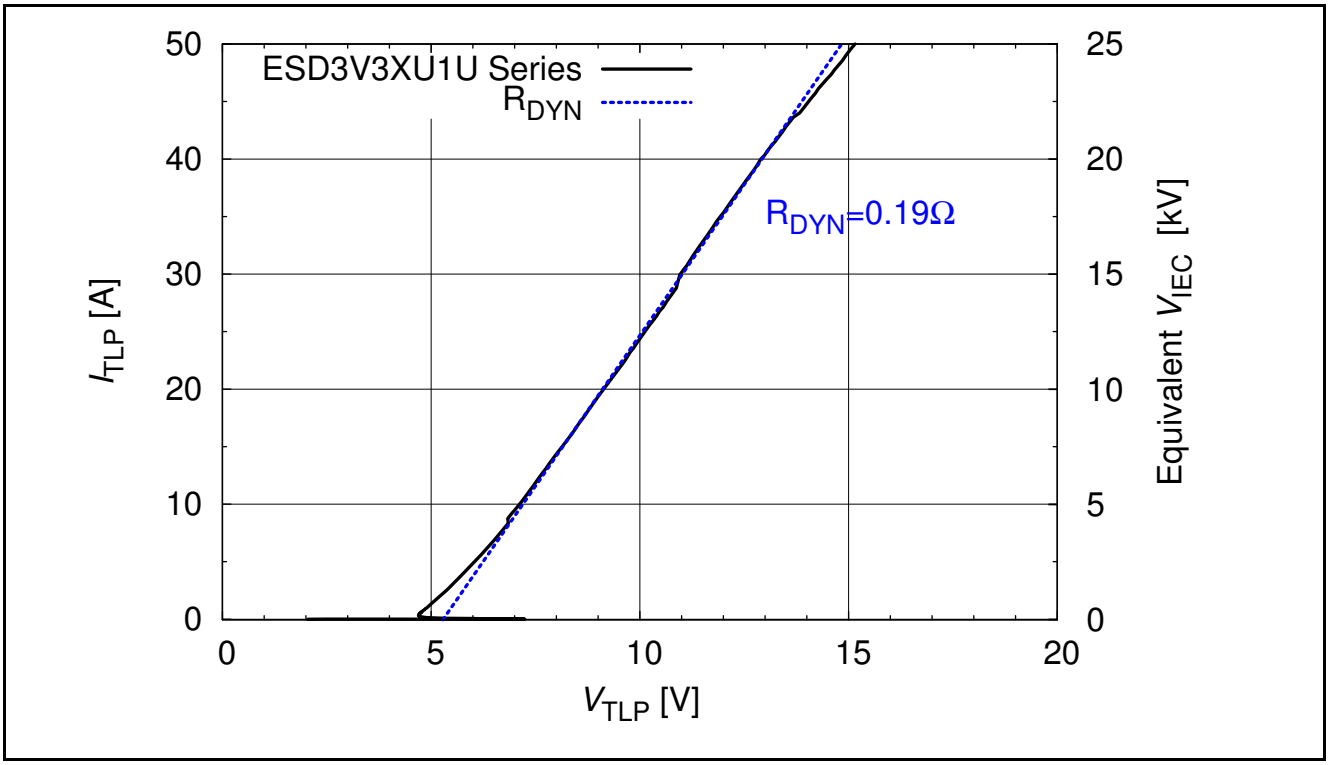

Figure 3-5 Clamping voltage $V_{TLP} = f(I_{TLP})$, from pin 1 to pin 2 Note: [2]

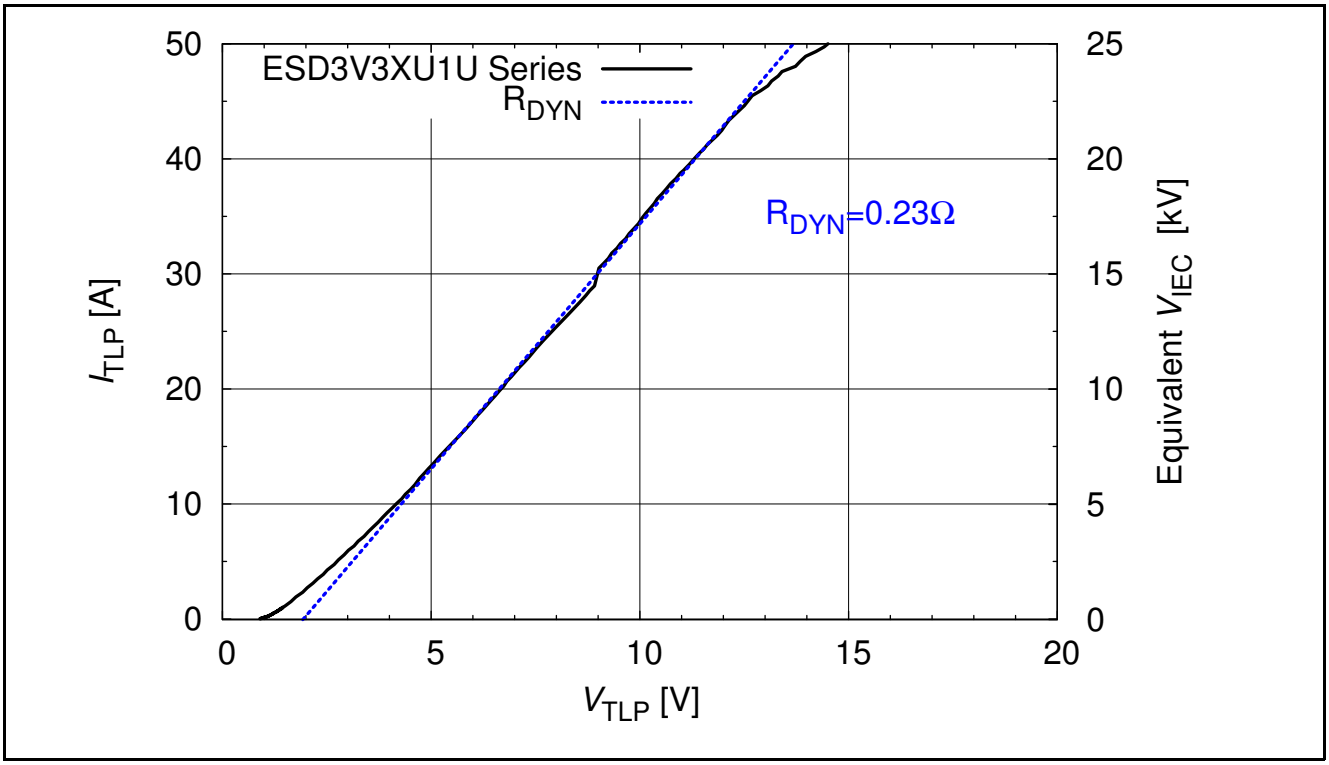

Figure 3-6 Forward clamping voltage $V_{TLP} = f(I_{TLP})$, from pin 2 to pin 1 Note: [2]

Note: TLP parameter: Z_0 = 50 Ω, t_p = 100 ns, t_r = 300 ps, averaging window: t_1 = 30 ns to t_2 = 60 ns, extraction of dynamic resistance using least squares fit of TLP charactertistic between I_{PP1} = 10 A and I_{PP2} = 40 A. The equivalent stress level V_{IEC} according IEC 61000-4-2 (R = 330 Ω, C = 150 pF) is calculated at the broad peak of the IEC waveform at t = 30 ns with 2 A / kV

4 Application Information

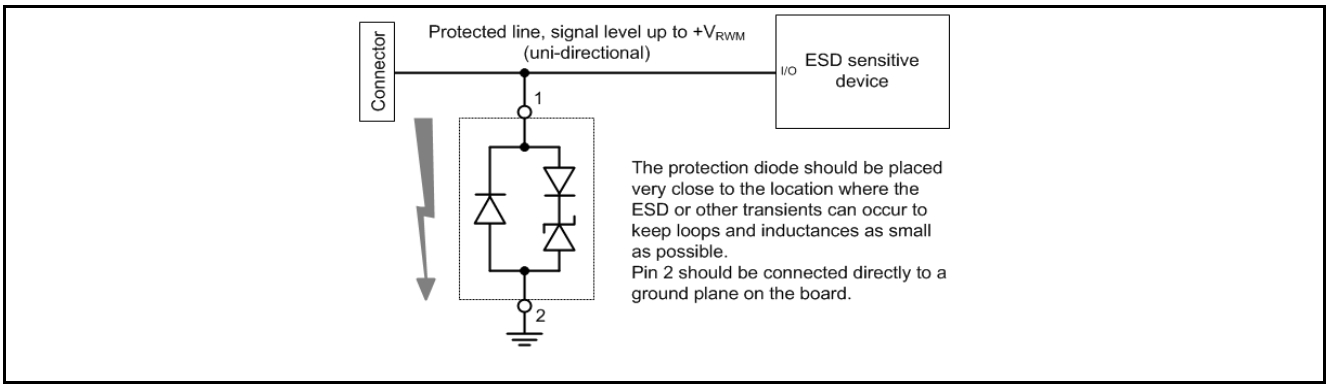

Figure 4-1 Single line, uni-directional ESD / Transient protection

5 Package Information

5.1 PG-TSSLP-2-1 (mm) [3]

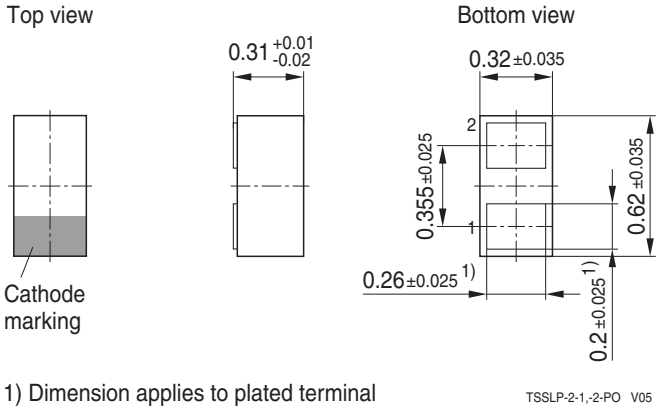

Figure 5-1 PG-TSSLP-2-1: Package overview

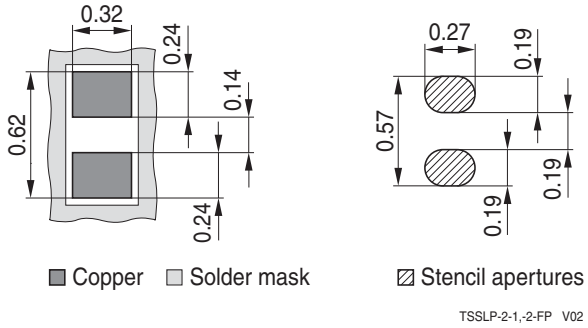

Figure 5-2 PG-TSSLP-2-1: Footprint

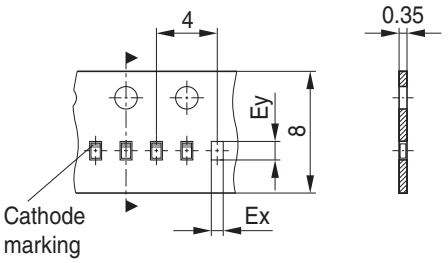

Figure 5-3 PG-TSSLP-2-1: Packing

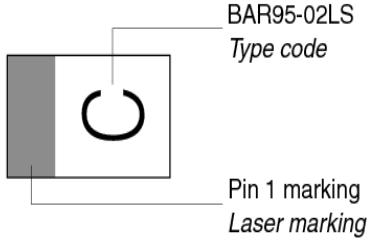

Figure 5-4 PG-TSSLP-2-1: Marking (example)

6 Package Information

6.1 PG-TSLP-2-17 (mm)[3]

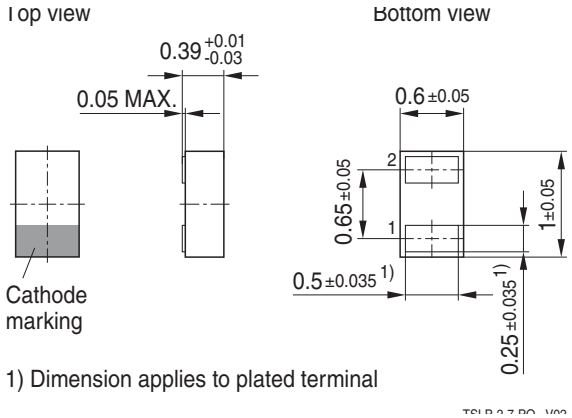

Figure 6-1 PG-TSLP-2-17: Package overview

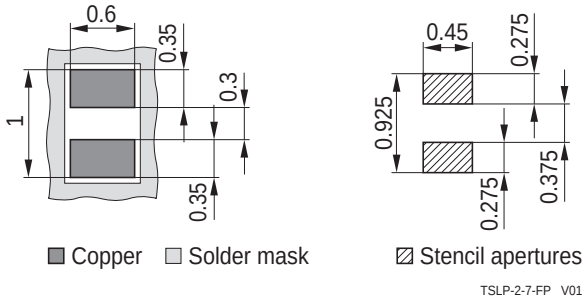

Figure 6-2 PG-TSLP-2-17: Footprint

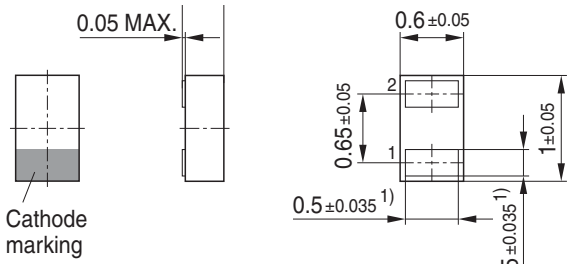

Figure 6-3 PG-TSLP-2-17: Packing

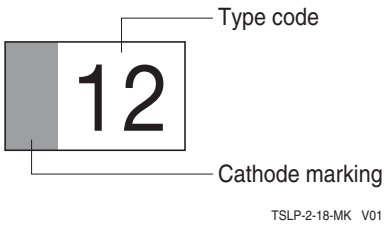

Figure 6-4 PG-TSLP-2-17: Marking (example)

References

[1] On-chip ESD protection for integrated circuits, Albert Z. H. Wang, ISBN:0-7923-7647-1

[2] Infineon AG - **Application Note AN210:** Effective ESD Protection Design at System Level Using VF-TLP Characterization Methodology

[3] Infineon AG - Recommendations for PCB Assembly of Infineon TSLP and TSSLP Package

Terminology

C_L	Line capacitance
DVI	Digital Visual Interface
EFT	Electrical Fast Transient
ESD	Electrostatic Discharge
HDMI	High Definition Multimedia Interface
IEC	International Electrotechnical Commission
I_{PP}	Peak pulse current
I_R	Reverse current
I_{RWM}	Reverse working current maximum
MDDI	Mobile Display Digital Interface
MIPI	Mobile Industrial Processor Interface
NFC	Near Field Communication
PCB	Printed Circuit Board
R_{DYN}	Dynamic resistance
RoHS	Restriction of Hazardous Substances Directive
S-ATA	Serial Advanced Technology Attachment
SWP	Single Wire Protocol
T_A	Ambient temperature
TLP	Transmission Line Pulse
T_{OP}	Operation temperature
t_p	Pulse duration
t_r	Pulse rise time
T_{stg}	Storage temperature
USB	Universal Serial Bus
V_{CL}	Reverse clamping voltage
V_{ESD}	Electrostatic discharge voltage
V_{FC}	Forward Clamping Voltage
V_{Hold}	Holding Voltage
V_{IEC}	Equivalent stress level according IEC61000-4-2 (R = 330 Ω , C = 150 pF)
V_R	Reverse voltage
V_{RWM}	Reverse working voltage maximum
V_{Trig}	Triggering Voltage
Z_0	Impedance

w w w . i n f i n e o n . c o m

Published by Infineon Technologies AG