TVS Diodes

Transient Voltage Suppressor Diodes

ESD18VU1B Series

Bi-directional ESD / Transient Protection Diode

ESD18VU1B-02LS
ESD18VU1B-02LRH

Data Sheet

Revision 1.0, 2011-05-13
Preliminary

Industrial and Multi-Market

Edition 2011-05-13

Published by
Infineon Technologies AG
81726 Munich, Germany

© 2011 Infineon Technologies AG
All Rights Reserved.

Legal Disclaimer

The information given in this document shall in no event be regarded as a guarantee of conditions or characteristics. With respect to any examples or hints given herein, any typical values stated herein and/or any information regarding the application of the device, Infineon Technologies hereby disclaims any and all warranties and liabilities of any kind, including without limitation, warranties of non-infringement of intellectual property rights of any third party.

Information

For further information on technology, delivery terms and conditions and prices, please contact the nearest Infineon Technologies Office (**www.infineon.com**).

Warnings

Due to technical requirements, components may contain dangerous substances. For information on the types in question, please contact the nearest Infineon Technologies Office.

Infineon Technologies components may be used in life-support devices or systems only with the express written approval of Infineon Technologies, if a failure of such components can reasonably be expected to cause the failure of that life-support device or system or to affect the safety or effectiveness of that device or system. Life support devices or systems are intended to be implanted in the human body or to support and/or maintain and sustain and/or protect human life. If they fail, it is reasonable to assume that the health of the user or other persons may be endangered.

Revision History	
Page or Item	**Subjects (major changes since previous revision)**
Revision 1.0, 2011-05-13	

Trademarks of Infineon Technologies AG

AURIX™, BlueMoon™, COMNEON™, C166™, CROSSAVE™, CanPAK™, CIPOS™, CoolMOS™, CoolSET™, CORECONTROL™, DAVE™, EasyPIM™, EconoBRIDGE™, EconoDUAL™, EconoPACK™, EconoPIM™, EiceDRIVER™, EUPEC™, FCOS™, HITFET™, HybridPACK™, ISOFACE™, I²RF™, IsoPACK™, MIPAQ™, ModSTACK™, my-d™, NovalithIC™, OmniTune™, OptiMOS™, ORIGA™, PROFET™, PRO-SIL™, PRIMARION™, PrimePACK™, RASIC™, ReverSave™, SatRIC™, SIEGET™, SINDRION™, SMARTi™, SmartLEWIS™, TEMPFET™, thinQ!™, TriCore™, TRENCHSTOP™, X-GOLD™, XMM™, X-PMU™, XPOSYS™.

Other Trademarks

Advance Design System™ (ADS) of Agilent Technologies, AMBA™, ARM™, MULTI-ICE™, PRIMECELL™, REALVIEW™, THUMB™ of ARM Limited, UK. AUTOSAR™ is licensed by AUTOSAR development partnership. Bluetooth™ of Bluetooth SIG Inc. CAT-iq™ of DECT Forum. COLOSSUS™, FirstGPS™ of Trimble Navigation Ltd. EMV™ of EMVCo, LLC (Visa Holdings Inc.). EPCOS™ of Epcos AG. FLEXGO™ of Microsoft Corporation. FlexRay™ is licensed by FlexRay Consortium. HYPERTERMINAL™ of Hilgraeve Incorporated. IEC™ of Commission Electrotechnique Internationale. IrDA™ of Infrared Data Association Corporation. ISO™ of INTERNATIONAL ORGANIZATION FOR STANDARDIZATION. MATLAB™ of MathWorks, Inc. MAXIM™ of Maxim Integrated Products, Inc. MICROTEC™, NUCLEUS™ of Mentor Graphics Corporation. Mifare™ of NXP. MIPI™ of MIPI Alliance, Inc. MIPS™ of MIPS Technologies, Inc., USA. muRata™ of MURATA MANUFACTURING CO., MICROWAVE OFFICE™ (MWO) of Applied Wave Research Inc., OmniVision™ of OmniVision Technologies, Inc. Openwave™ Openwave Systems Inc. RED HAT™ Red Hat, Inc. RFMD™ RF Micro Devices, Inc. SIRIUS™ of Sirius Sattelite Radio Inc. SOLARIS™ of Sun Microsystems, Inc. SPANSION™ of Spansion LLC Ltd. Symbian™ of Symbian Software Limited. TAIYO YUDEN™ of Taiyo Yuden Co. TEAKLITE™ of CEVA, Inc. TEKTRONIX™ of Tektronix Inc. TOKO™ of TOKO KABUSHIKI KAISHA TA. UNIX™ of X/Open Company Limited. VERILOG™, PALLADIUM™ of Cadence Design Systems, Inc. VLYNQ™ of Texas Instruments Incorporated. VXWORKS™, WIND RIVER™ of WIND RIVER SYSTEMS, INC. ZETEX™ of Diodes Zetex Limited.

Last Trademarks Update 2010-06-09

Table of Contents

Table of Contents 4
List of Figures 5
List of Tables 6
1 Bi-directional ESD / Transient Protection Diode 7
1.1 Features 7
1.2 Application Examples 7
2 Product Description 7
3 Characteristics 8
3.1 Electrical Characteristics at T_A = 25 °C, unless otherwise specified 8
4 Application Information 10
5 Ordering Information Scheme (Examples) 11
6 Package Information 12
6.1 PG-TSSLP-2-1 [2] 12
6.2 PG-TSLP-2-17 [2] 13
References 14
Terminology 15

List of Figures

Figure 1 Pin Configuration and Schematic Diagram 7
Figure 2 Definitions of electrical characteristics 8
Figure 3 Single line, bi-directional ESD / Transient protection [3] 10
Figure 4 Ordering information scheme 11
Figure 5 PG-TSSLP-2-1: Package overview 12
Figure 6 PG-TSSLP-2-1: Footprint 12
Figure 7 PG-TSSLP-2-1: Packing 12
Figure 8 PG-TSSLP-2-1: Marking (example) 12
Figure 9 PG-TSLP-2-17: Package overview 13
Figure 10 PG-TSLP-2-17: Footprint 13
Figure 11 PG-TSLP-2-17: Packing 13
Figure 12 PG-TSLP-2-17: Marking (example) 13

List of Tables

Table 1 Ordering Information 7
Table 2 Maximum Rating at T_A = 25 °C, unless otherwise specified 8
Table 3 DC Characteristics at T_A = 25 °C, unless otherwise specified 9
Table 4 RF Characteristics at T_A = 25 °C, unless otherwise specified 9
Table 5 ESD Characteristics at T_A = 25 °C, unless otherwise specified 9

1 Bi-directional ESD / Transient Protection Diode

1.1 Features

- ESD / transient protection according to:
  - IEC61000-4-2 (ESD): ±16.5 kV (contact)
  - IEC61000-4-5 (surge): 2 A (t_p = 8 / 20 µs)
- Maximum working voltage: V_{RWM} = ±18.5 V (V_{TRIG} min = 20 V)
- Extremely low capacitance: C_L = 0.3 pF (typical)
- Small leadless plastic package, size 0201 / 0402
- Pb-free (RoHS compliant) and halogen free package

1.2 Application Examples

- ESD Protection of RF signal lines in Near Field Communication applications
- ESD Protection of applications with signaling voltage of up to ±18.5 V

2 Product Description

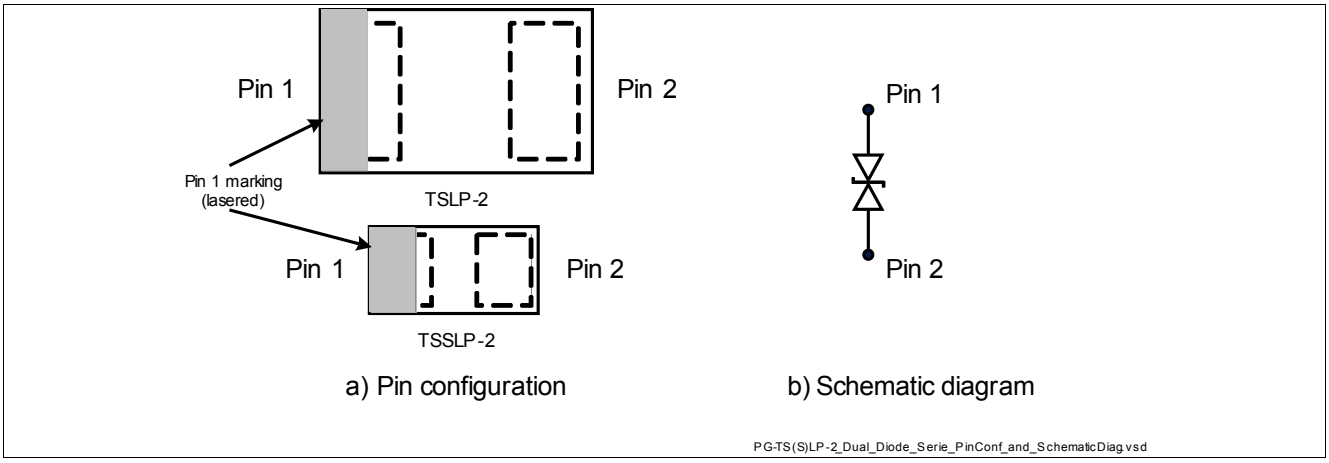

Figure 1 Pin Configuration and Schematic Diagram

Table 1 Ordering Information

Type	Package	Configuration	Marking code
ESD18VU1B-02LS	PG-TSLP-2-1	1 line, bi-directional	X
ESD18VU1B-02LRH	PG-TSSLP-2-17	1 line, bi-directional	X

3 Characteristics

Table 2 Maximum Rating *at T_A = 25 °C, unless otherwise specified*

Parameter	Symbol	Values			Unit
		Min.	Typ.	Max.	
ESD contact discharge[1)]	V_{ESD}	–	–	16.5	kV
Peak pulse current (t_p = 8 / 20 µs)[2)]	I_{PP}	–	–	2	A
Operating temperature	T_{OP}	-55	–	125	°C
Storage temperature	T_{stg}	-55	–	150	°C

1) V_{ESD} according to IEC61000-4-2

2) I_{PP} according to IEC61000-4-5

3.1 Electrical Characteristics at T_A = 25 °C, unless otherwise specified

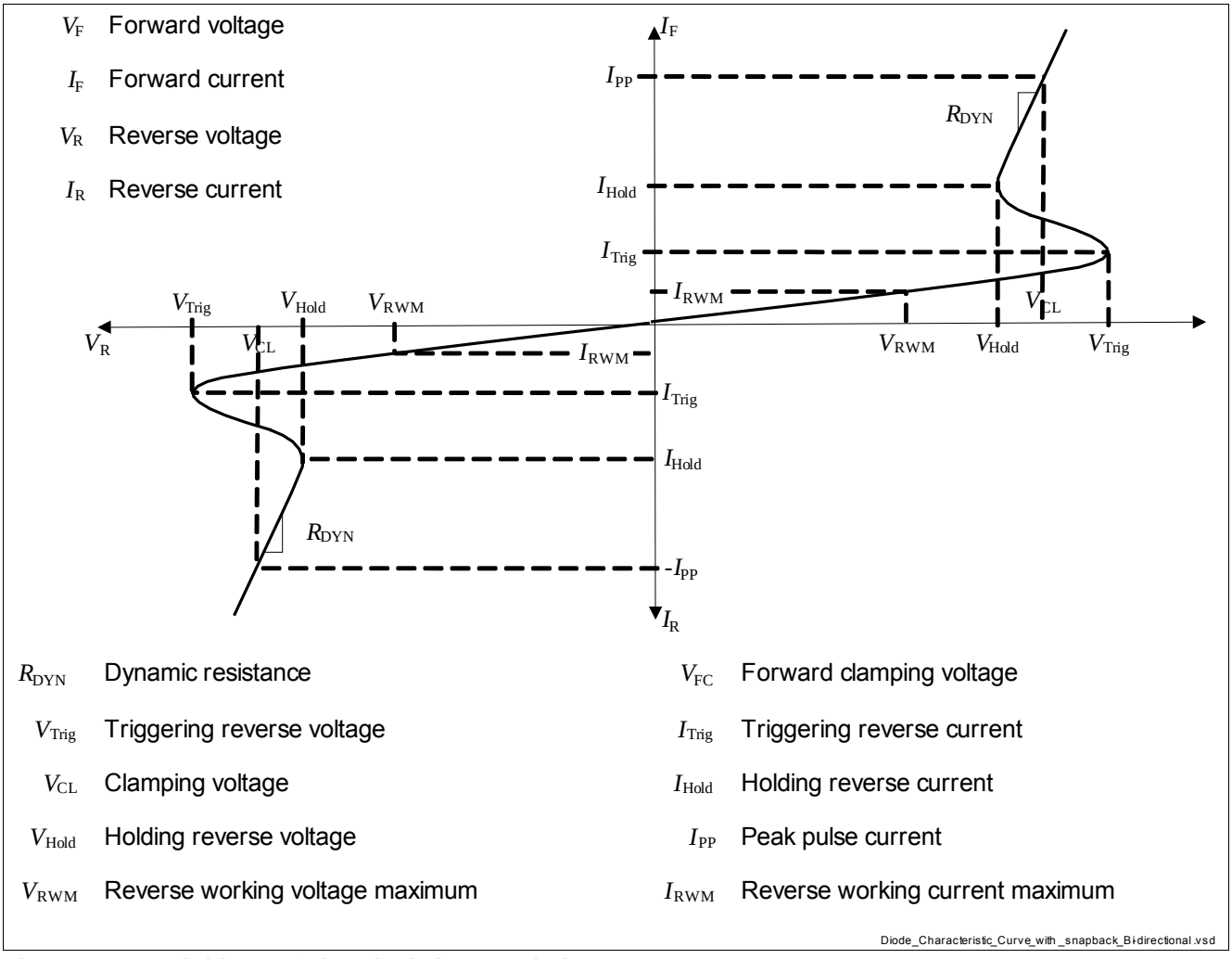

Figure 2 Definitions of electrical characteristics

Table 3 DC Characteristics at T_A = 25 °C, unless otherwise specified

Parameter	Symbol	Values			Unit	Note / Test Condition
		Min.	Typ.	Max.		
Reverse working voltage	V_{RWM}	–	–	18.5	V	Both directions
Trigger voltage	V_{TRIG}	20	–	–	V	Both directions
Reverse current	I_R	–	–	30	nA	V_R = 18.5 V Both directions
		–	–	1	mA	V_R = 20 V Both directions

Table 4 RF Characteristics at T_A = 25 °C, unless otherwise specified

Parameter	Symbol	Values			Unit	Note / Test Condition
		Min.	Typ.	Max.		
Line capacitance[1)]	C_L	–	0.3	0.6	pF	V_R = 0 V, f = 1 MHz
		–	0.3	0.6	pF	V_R = 0 V, f = 1 GHz
Serie inductance	L_S	–	0.2	–	nH	ESD18VU1B-02LS
		–	0.4	–	nH	ESD18VU1B-02LRH

1) Total capacitance I/O to GND

Table 5 ESD Characteristics at T_A = 25 °C, unless otherwise specified

Parameter	Symbol	Values			Unit	Note / Test Condition
		Min.	Typ.	Max.		
Clamping voltage[1)]	V_{CL}	–	26	–	V	I_{PP} = 16 A,
	V_{CL}	–	35	–		I_{PP} = 30 A,
Dynamic resistance[1)]	R_{DYN}	–	0.6	–	Ω	t_p = 100 ns

1) Please refer to Application Note AN210 [1]. TLP parameter: Z_0 = 50 Ω, t_p = 100ns, t_r = 300ps, averaging window: t_1 = 30 ns to t_2 = 60 ns, extraction of dynamic resistance using least squares fit of TLP charactertistics between I_{PP1} = 10 A and I_{PP2} = 40 A

4 Application Information

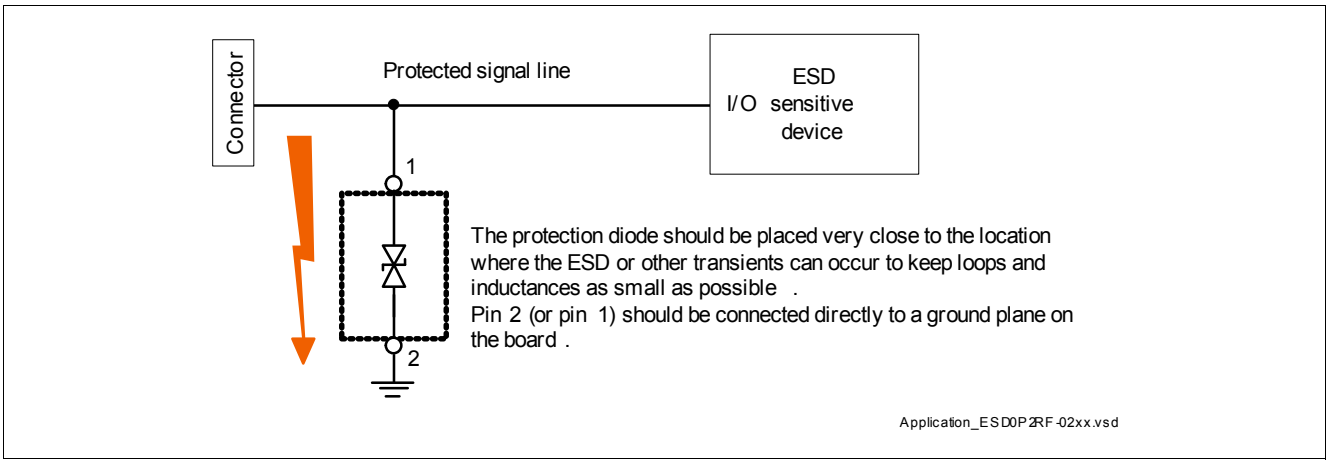

Figure 3 Single line, bi-directional ESD / Transient protection [3]

5 Ordering Information Scheme (Examples)

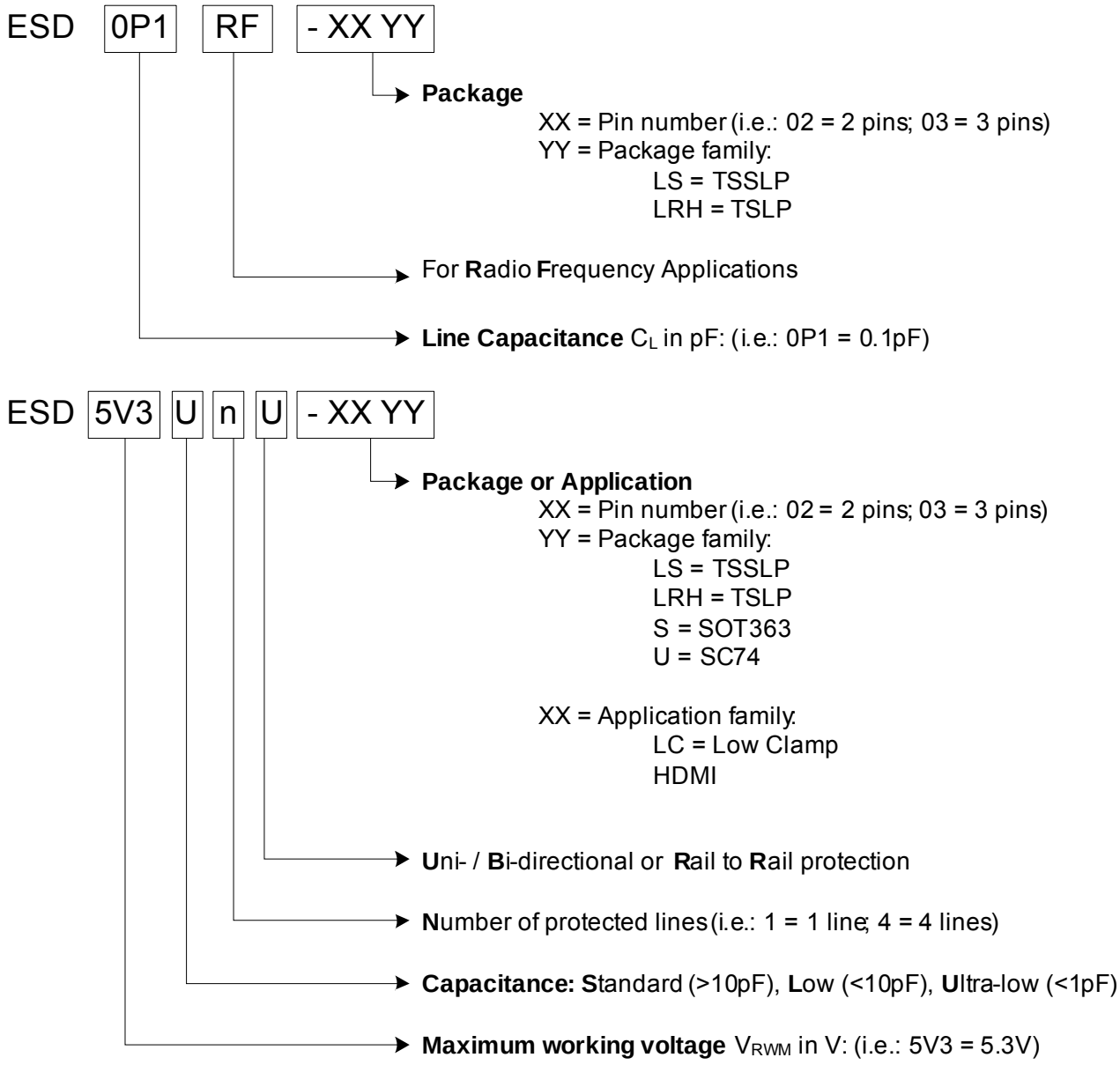

Figure 4 Ordering information scheme

6 Package Information

6.1 PG-TSSLP-2-1 [2]

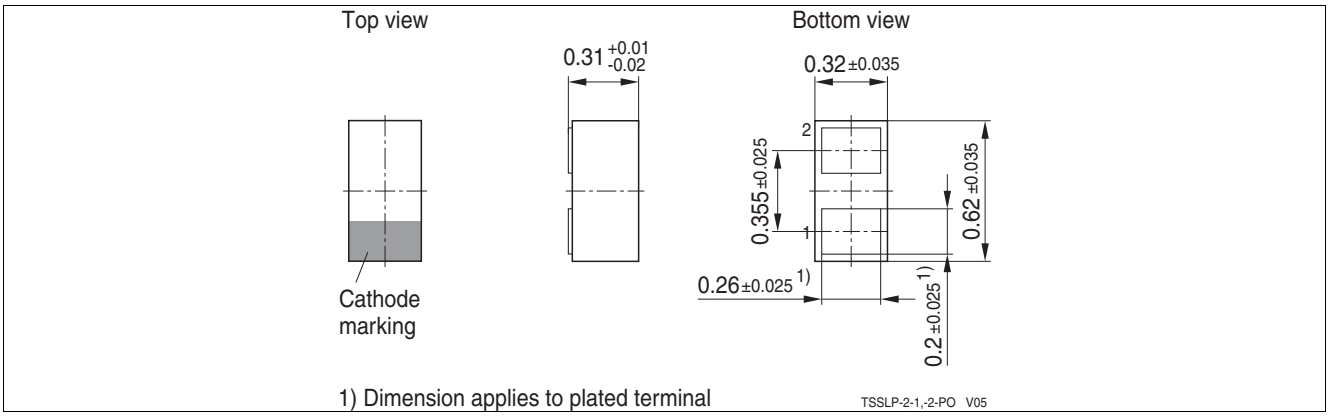

Figure 5 PG-TSSLP-2-1: Package overview

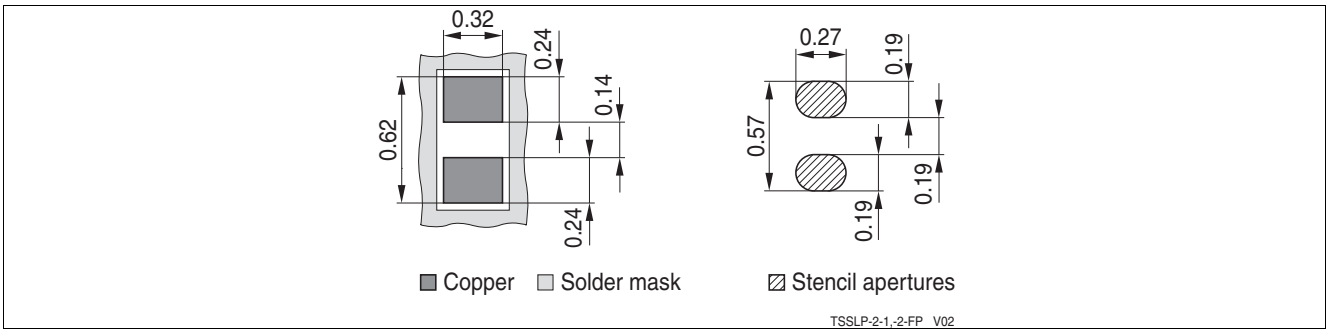

Figure 6 PG-TSSLP-2-1: Footprint

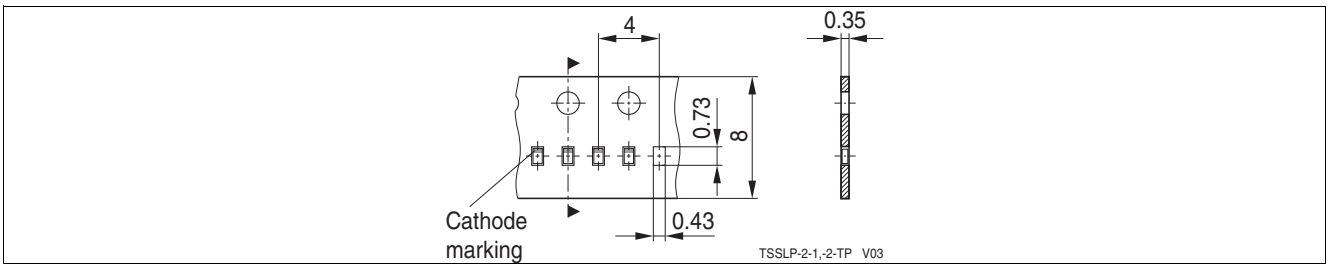

Figure 7 PG-TSSLP-2-1: Packing

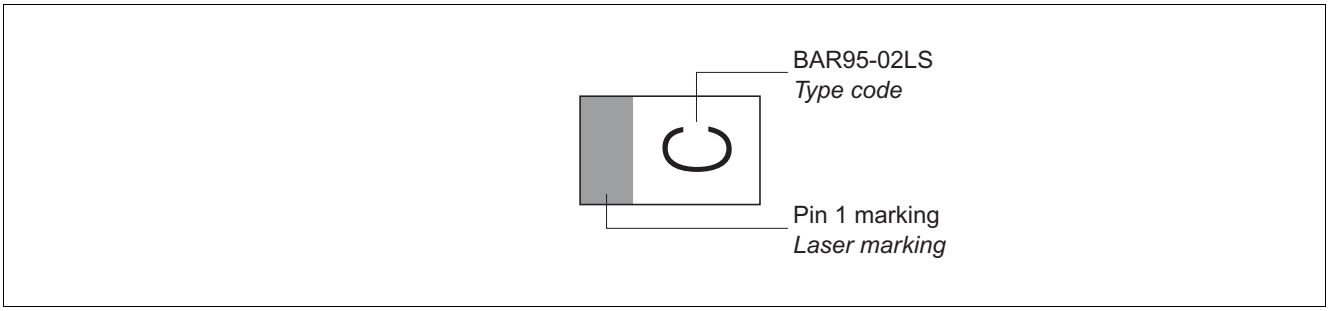

Figure 8 PG-TSSLP-2-1: Marking (example)

6.2 PG-TSLP-2-17 [2]

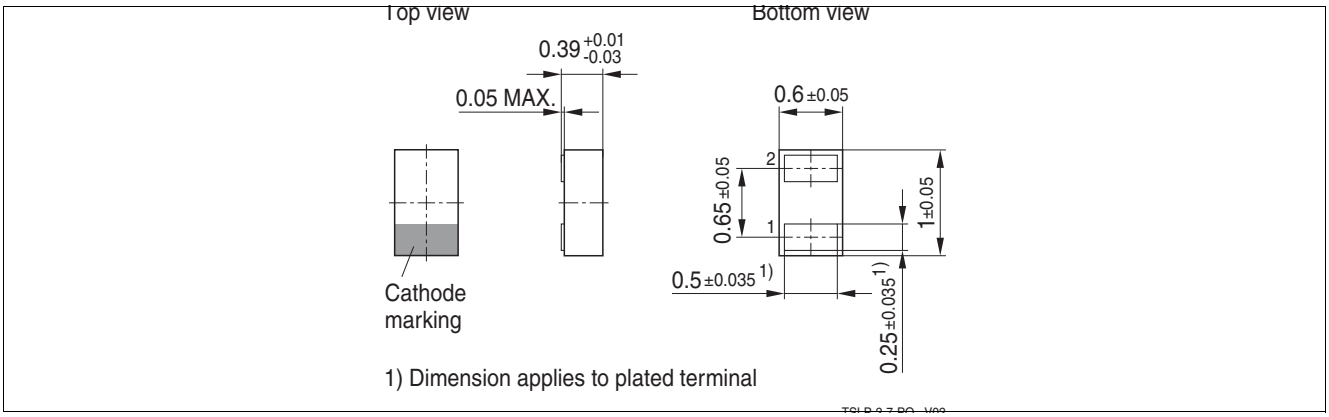

Figure 9 PG-TSLP-2-17: Package overview

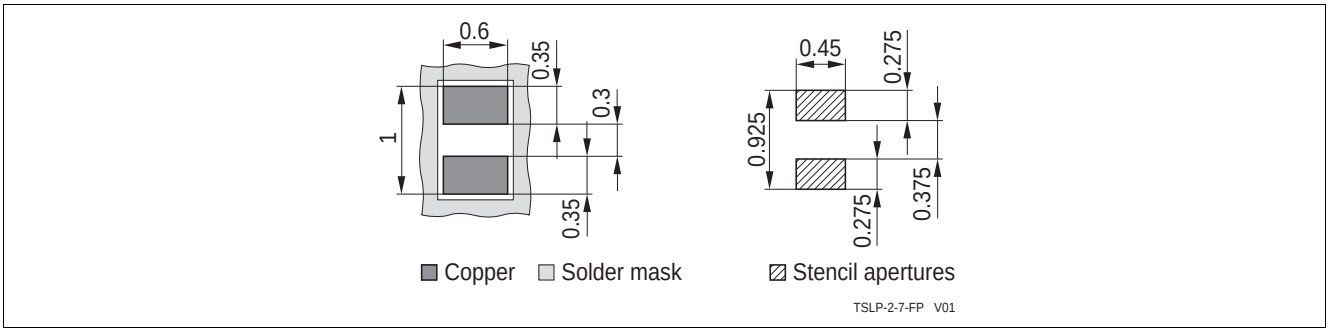

Figure 10 PG-TSLP-2-17: Footprint

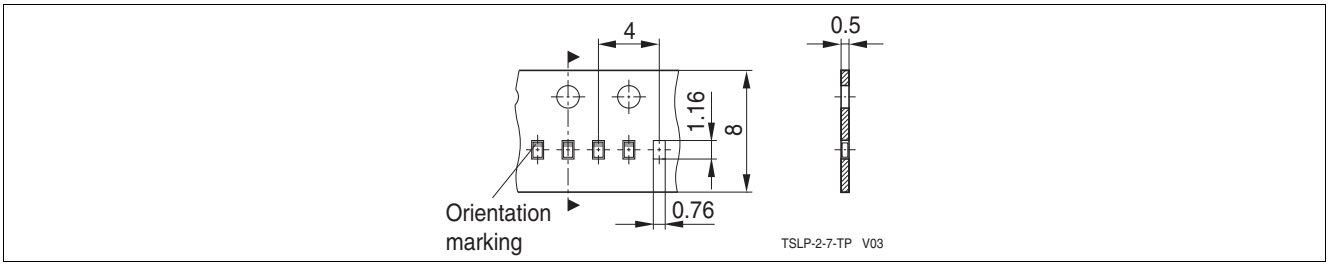

Figure 11 PG-TSLP-2-17: Packing

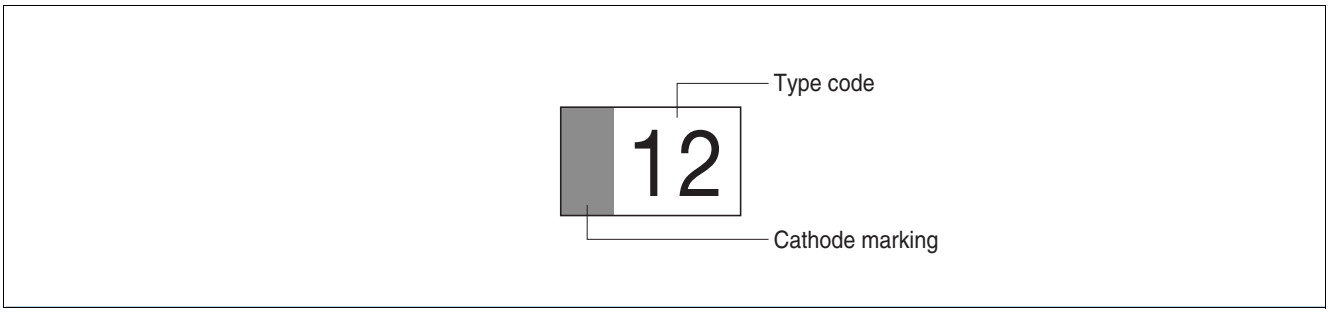

Figure 12 PG-TSLP-2-17: Marking (example)

References

[1] Infineon AG - **Application Note AN210:** Effective ESD Protection design at System Level Using VF-TLP Characterization Methodology

[2] Infineon AG - Recommendations for PCB Assembly of Infineon TSLP and TSSLP Packages

[3] Infineon AG - **Application Note AN244:** Tailored ESD Protection for the NFC Frontend

Terminology

C_L	Line capacitance
ESD	Electrostatic Discharge
IEC	International Electrotechnical Commission
I_{PP}	Peak pulse current
I_R	Reverse current
I_{RWM}	Reverse working current maximum
R_{DYN}	Dynamic resistance
RoHS	Restriction of Hazardous Substances Directive
T_A	Ambient temperature
TLP	Transmission Line Pulse
T_{OP}	Operation temperature
t_p	Pulse duration
t_r	Pulse rise time
T_{stg}	Storage temperature
V_{CL}	Reverse clamping voltage
V_{ESD}	Electrostatic discharge voltage
V_{FC}	Forward Clamping Voltage
V_{IEC}	Equivalent stress level according IEC61000-4-2 (R = 330 Ω , C = 150 pF)
V_R	Reverse voltage
V_{RWM}	Reverse working voltage maximum
V_{TRIG}	Trigger voltage
Z_0	Impedance

w w w . i n f i n e o n . c o m

Published by Infineon Technologies AG