

XENSIV™ radar sensors

For consumer, IoT, industrial, and automotive applications

www.infineon.com/radar-sensors



XENSIV™ radar sensors

For consumer, IoT, industrial, and automotive applications – giving technology the ability to “see”

Radar offers a host of advantages over passive infrared (PIR) technology in motion detection applications. These include increased robustness against false alarms, greater accuracy, and more precise measurement of detected objects, paving the way for new speed-detection and motion-sensing capabilities. These advanced capabilities enable all sorts of “things,” such as robots, cars, smart home devices and even lights, to “see” their surroundings and respond dynamically.

As a leading provider of radar chip technology, we offer a comprehensive range of mmWave radar sensors within our XENSIV™ family, which operates at 24 GHz and 60 GHz frequencies. These sensors cater to diverse consumer, IoT, industrial and automotive applications. In addition, our RASIC™ family of radar front-end MMICs supports 77/79 GHz frequencies and is designed for automotive radar applications, offering a complete solution for a wide range of use cases, from basic warning functions such as lane change assist (LCA) and blind spot detection (BSD) to advanced active safety systems like automatic emergency braking (AEB) and dynamic driving features like adaptive cruise control (ACC).

Click here to learn more:
www.infineon.com/radar-sensors

As the market leader in radar chips, we offer a wide portfolio of mmWave radar sensors as part of our XENSIV™ sensor family – including Doppler radar as well as FMCW radar systems. This portfolio includes the smallest 24 GHz MMIC in the market and the most integrated and prominent 24 GHz radar transceiver family currently available. These radar chips are designed to support different industrial, smart home, and consumer applications. In addition, we offer radar sensors in the 60 GHz range, used in consumer products like the Google Pixel 4 smartphone, Google Nest Thermostat, Google Nest Hub, and Samsung Frame Smart TV.

Motion detection with radar offers significant advantages over PIR and other motion-sensing technologies

Our 24- and 60-GHz radar sensors cover a wide range of applications. Many of them are based on motion detection triggering systems, such as lighting solutions, automatic doors, security camera and video doorbell, or smart home devices. In contrast to other motion detection technologies like PIR, radar technology offers significant advantages.

These include smaller system sizes, greater accuracy, and more precise measurements of detected objects. With increased robustness and fewer false alarms, radar will also enable improved energy efficiency as the overall system power budget will be reduced. In addition, radar can determine the direction, speed, distance, and, depending on the antenna configuration, even the position of a moving object.

When to use 24 GHz or 60 GHz radar technology

In the 24 GHz range, the bandwidth for FMCW radar operations covers 250 MHz within the regulated ISM band. In the 60 GHz regime, an unlicensed ultrawideband of up to 7 GHz can be used for short-range applications. Consequently, 60 GHz FMCW radar systems can offer a better resolution, allowing additional use cases such as people localization and tracking. Due to micromotion detection, radar technology makes gesture control, material classification, and monitoring of various vital functions (respiration, heartbeat, or blood pressure) possible.

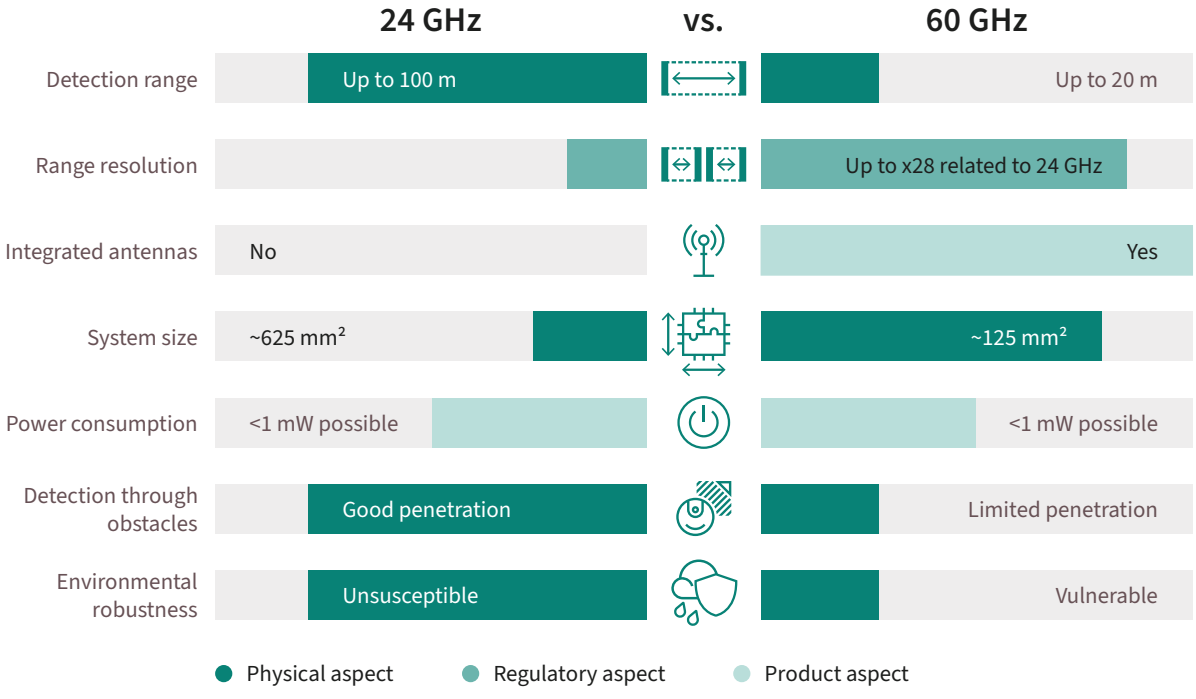

Click here to learn more:
www.infineon.com/radar-sensors

Radar implementation can bring several benefits to different applications:

Smart TV



Save energy and OLED lifetime by turning off

HVAC systems



Track people to move the airflow away from them

Security



Security camera and video doorbells

Lighting



Indoor and outdoor. Resistant to harsh weather

Monitors and laptops



Small, hidden, sensitive

Home appliances



Activate displays and control it with gestures

Door opening



Direction of travel to remove false opening

Smart speaker

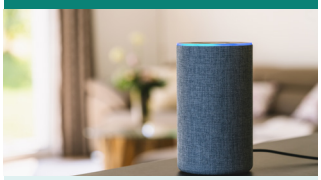

Eliminate keyword based activation

Smart home



Robust, discreet, small

Gaming and VR



Enhance gaming experience

Smart toilet



Presence sensing and water level detection

Service robots



Robust, small footprint, accurate

Robotics



Safety, accuracy and efficiency

Sleep monitoring systems



Breathing and heart rate measurement

Summary of key benefits

- Direction, proximity, and speed detection
- Localization and tracking functionalities
- Detection through non-conductive materials (Product design flexibility, anonymous sensing)
- Operation is sustained through harsh environmental conditions such as rain, snow, fog, and dust
- Sensitive enough to capture not only presence, but also vital signs, like breathing and heartbeat
- Performance parameters are adjustable, ensuring adaptability to different application requirements

Click here to learn more:

www.infineon.com/radar-sensors

24 GHz radar sensors for automotive

BGT24ATR22
XENSIV™ 24 GHz pulsed Doppler radar transceiver

The BGT24ATR22 is a monolithic microwave integrated circuit (MMIC) for 24 GHz radar applications. It provides building blocks for analog signal generation and reception, operating in the frequency range from 24 GHz up to 24.25 GHz.

Key features
- 24 GHz radar transceiver
- 2Tx/2Rx channels
- Low-phase noise VCO
- Automatic frequency control
- Automatic DC offset compensation
- State machine with ultralow power modes
- 12-bit ADC
- Digital radar data processing unit
- Temperature range: -40°C to +105°C
- VQFN-32 RoHS compliant, leadless package

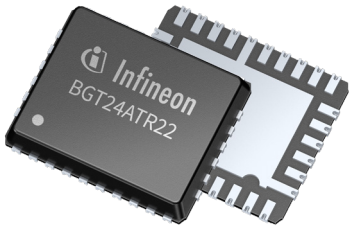

Applications
- Automotive short-range radar
- Hands-free trunk and door opening
- Motion detection
- Touchless switches

Benefits
- Compact PCB design due to high level of integration
- Ultralow power consumption modes for 24/7 use cases
- Low system costs due entry-level only microcontrollers
- Autonomous motion sensing
- Globally approved 24 GHz radar with excellent characteristics for robust and reliable performance in harsh environmental conditions

Smart trunk opener (STO) system diagram

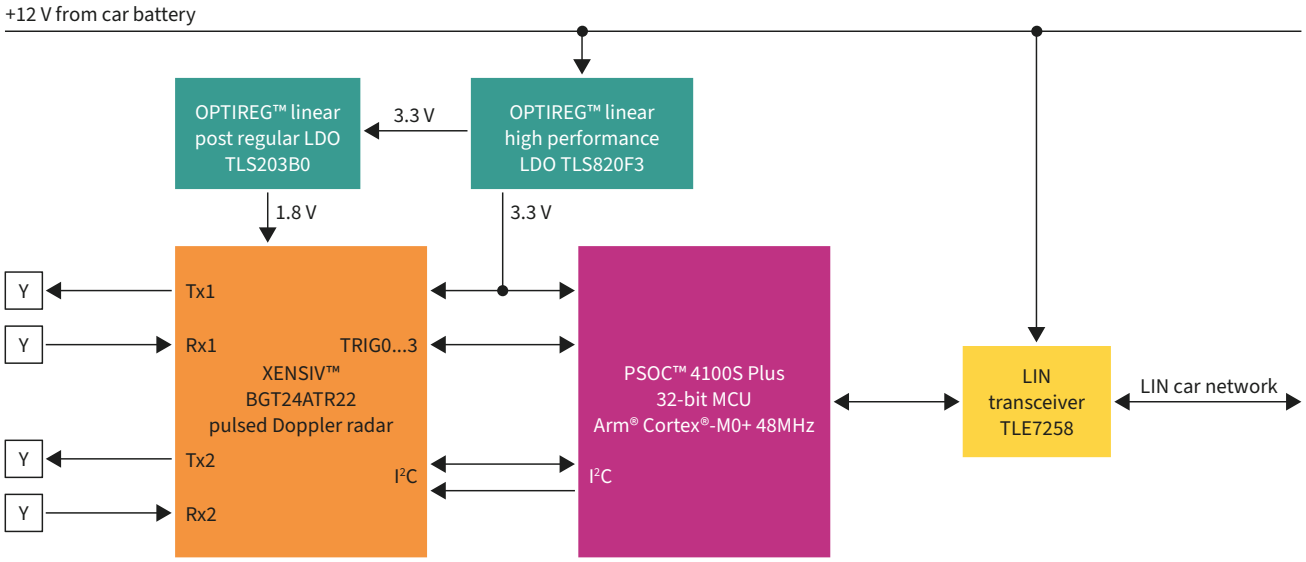

XENSIV™ 24 GHz radar for automotive – Product overview

Product	OPN	Qualification	Frequency min Frequency max	NF	Packages
BGT24ATR22	BGT24ATR22E6433XUMA1	AEC-Q100	24–24.25	NFSSB: 13 dB at 1 kHz	VQFN-32-9

Click here to learn more:
www.infineon.com/radar-sensors

60 GHz radar sensors for automotive

BGT60ATR24AIP
XENSIV™ 60 GHz radar sensor for automotive enables highly reliable in-cabin monitoring systems

The XENSIV™ BGT60ATR24AIP is a state-of-the-art automotive 60 GHz radar sensor that enables ultrawide bandwidth FMCW operation within a compact, integrated package. Equipped with a digital interface for seamless sensor configuration and data acquisition, it features an integrated state machine that allows independent data collection while optimizing power modes for minimal energy consumption. This versatile design enables efficient and reliable in-cabin monitoring. It is ideal for safety and driver assistance applications where precise occupant detection, seat sensing, or activity monitoring are essential.

The BGT60ATR24AIP incorporates integrated antennas, simplifying system design and enhancing overall performance. This innovative antenna-in-package solution offers automotive manufacturers a compact, robust platform that elevates in-cabin sensing capabilities. It provides real-time, accurate detection of motion, presence, and activity. Ultimately, the BGT60ATR24AIP helps create smarter, safer, and more connected vehicle environments by delivering high-performance, low-power radar sensing tailored to automotive needs.

Features
- 60 GHz radar sensor for FMCW operation
- 4.7 GHz bandwidth
- 2Tx 4Rx Antenna-in-Package (AIP)
- Digital interface for chip configuration and radar data acquisition
- Optimized power modes for low-power operation
- Integrated state machine for independent operation
- AEC-Q100 qualified

Benefits
- Low power consumption
- Integrated antenna-in-package (AIP)
- Accurate and robust performance
- Excellent thermal management
- Size- and space-optimized solution

Block diagram

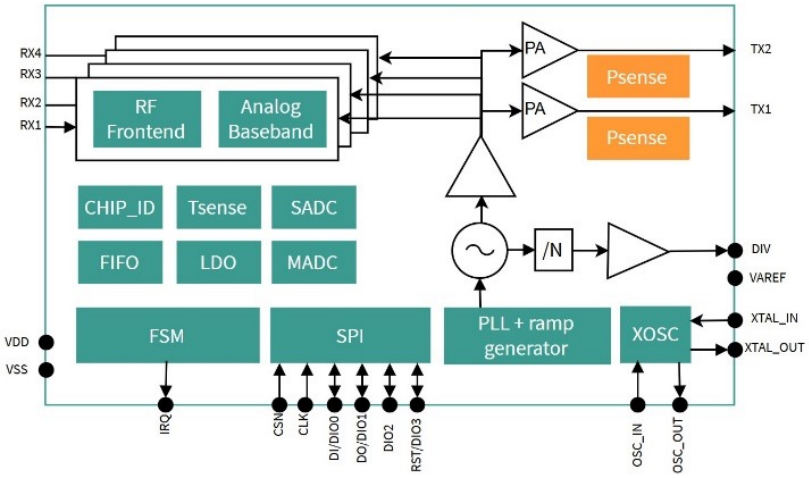

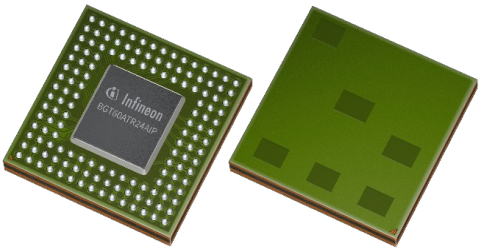

XENSIV™ 60 GHz radar for automotive – Product overview

Product	OPN	Qualification	Frequency min Frequency max	NF	Package
BGT60ATR24AIP	BGT60ATR24AIPE6327XUMA1	AEC-Q100 (Grade 2)	57.7 GHz - 62.4 GHz	NFSSB:12 dBm at 100 KHz	PG-VF2BGA-144-1

Click here to learn more:
www.infineon.com/radar-sensors

77/79 GHz radar ICs for automotive

RASIC™ front-end radar transceiver ICs

Infineon has been delivering automotive 77 GHz radar products for over a decade. Infineon's RASIC™ family of radar transceiver MMICs addresses the needs of 77/79 GHz radar for all safety-critical applications, from automatic emergency braking (AEB) to high-resolution radars in automated driving. It supports precise distance measurement and simultaneous transmitter operation for MIMO.

The CTRX8191F is a highly integrated device that performs all functions of a radar front-end in a single device, from FMCW signal conditioning to the generation of digital receive data output. On-chip temperature and output power sensors and multiple monitoring circuits allow for calibration and monitoring. The MMIC is controlled via SPI. Additionally, the CTRX8191F offers cascading functionality, enabling the creation of up to 24T24R radar systems.

Features

- Radar 77 GHz transceiver MMIC (RASIC™ CTRX8191F)
- Radar MCU family featuring radar signal processing units (AURIX™ TC3xx and TC4xx)
- Radar system power supply with numerous safety functions (TLF3068x)

Benefits

- One 77/79 GHz radar platform supporting all types of automotive radar applications
- Scalability by cascading multiple MMICs and MCUs enabling most advanced sensors
- Flexibility through numerous configuration parameters
- ASIL C support reducing customer R&D efforts

Product overview

Product	Config.	Key benefits	Features
CTRX8191F	4Tx4Rx	Transceiver MMIC with cascading	– Transmit channels (4Tx, up to 4 GHz BW within 76–81 GHz) – Receive channels: 4Rx – Integrated PLL (Phase Locked Loop) – Sequencer enabling the execution of a user-defined ramp configuration – Integrated Analog-to-Digital Converter (ADC) – Integrated calibration functionality – Built-in monitoring functionality – Compliant with ISO 26262; capable for up to ASIL C
CTRX8191FS	4Tx4Rx	Standalone transceiver MMIC	

Please be aware that 77/79 GHz radar products are not available via Infineon's distribution partners.

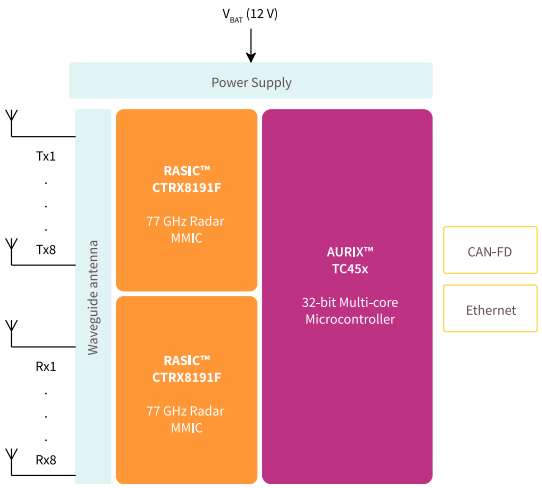

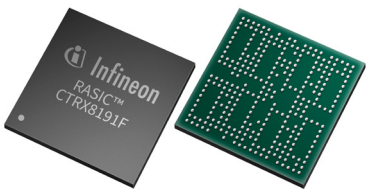

ISO 26262 compliant

Click here to learn more:
www.infineon.com/radar-sensors

60 GHz radar sensors for consumer and IoT

Infineon's innovative XENSIV™ 60 GHz radar chip enables things to see and revolutionizes the human-machine interface.

XENSIV™ 60 GHz radar for consumer and IoT – Product overview

Product	SP	OPN	Description	Packages
BGT60TR13C	SP002262606	BGT60TR13CE6327XUMA1	XENSIV™ 60 GHz FMCW radar sensor for advanced sensing	VF2BGA-40
BGT60UTR11AIP	SP005407929	BGT60UTR11AIPXUMA1	XENSIV™ 60 GHz highly integrated FMCW radar sensor	VF2BGA-28-1
BGT60LTR11AIP	SP005537624	BGT60LTR11SAIPXUMA1	XENSIV™ 60 GHz completely autonomous pulsed-Doppler radar sensor, operating in the frequency band from 61 GHz to 61.5 GHz.	UF2BGA-421
BGT60LTR11SAIP	SP005832449	BGT60LTR11SAIPXUMA1	Down-specified version of XENSIV™ BGT60LTR11AIP with reduced detection range (autonomous mode) and operating temperature from -10 to +70°C	
BGT60LTR11BAIP	SP005547020	BGT60LTR11BAIPXUMA1	Japanese version of XENSIV™ BGT60LTR11AIP, operating in the frequency band from 60.5 GHz to 61 GHz (Japanese ISM band)	
BGT60CUTR13AIP	SP005729332	BGT60CUTR13AIPXUMA1	XENSIV™ 60 GHz CMOS FMCW radar sensor with integrated processing via HW Accelerator	PG-VF2BGA-38

XENSIV™ 60 GHz radar for consumer and IoT – Evaluation boards

Board	SP	OPN	Description
DEMO BGT60TR13C	SP005728718	DEMOBGT60TR13CTOBO1	Demonstration kit, consisting of a Radar Baseboard MCU7 and a XENSIV™ BGT60TR13C sensor shield.
DEMO BGT60UTR11AIP	SP005745304	DEMOBGT60UTR11AIPTOBO1	Demonstration kit, consisting of a Radar Baseboard MCU7 Plus and a XENSIV™ BGT60UTR11AIP sensor shield.
DEMO BGT60LTR11AIP	SP005422969	DEMOBGT60LTR11AIPTOBO1	Demonstration kit, consisting of a Radar Baseboard MCU7 and a XENSIV™ BGT60LTR11AIP sensor shield.
SHIELD_AUTONOM_BGT60	SP005630363	SHIELDAUTONOMBGT60TOBO1	Shield for fully autonomous operation of XENSIV™ BGT60LTR11AIP; directly fits on Arduino MKR board.
S2GO RADAR BGT60LTR11	SP005594890	S2GORADARBGT60LTR11TOBO1	Shield2Go version of XENSIV™ BGT60LTR11AIP, that can be used in both autonomous/SPI modes.
REF_BGT60LTR11AIP_M0	SP005894766	REFBGT60LTR11AIPM0TOBO1	Reference design with XENSIV™ BGT60LTR11AIP (SPI mode) and XMC™ Cortex®-M0 Microcontroller for data processing.
REF_BGT60LTR11AIP_AUT	SP005636053	REFBGT60LTR11AIPAUTTOBO1	Reference design with XENSIV™ BGT60LTR11AIP (autonomous mode), FCC, CE certified.
KIT_CSK_BGT60TR13C	SP005635357	KITCSKBGT60TR13CTOBO1	Connected Sensor Kit (CSK), consisting of a Rapid IoT Connect Developer Kit Feather board and a XENSIV™ BGT60TR13C Wing board.
KIT_CSK_BGT60UTR11AIP	SP006089336	KITCSKBGT60UTR11AIPTOBO1	Connected Sensor Kit (CSK), consisting of a Rapid IoT Connect Developer Kit Feather board and a XENSIV™ BGT60UTR11AIP Wing board.
KIT_CSK_BGT60CUTR13	SP006232440	KITCSKBGT60CUTR13TOBO1	Connected Sensor Kit (CSK), consisting of a Rapid IoT Connect Developer Kit Feather board and a XENSIV™ BGT60CUTR13AIP Wing board

Click here to learn more:
www.infineon.com/radar-sensors

BGT60LTR11AIP
XENSIV™ 60 GHz first completely autonomous radar sensor for motion sensing

The BGT60LTR11AIP is a fully integrated microwave motion sensor that includes antennas in package (AIP) and built-in detectors for motion and direction of motion. A state machine enables the device to operate without any external microcontroller. This autonomous mode detects a human target up to 7 m with a low power consumption of less than 2 mW. The BGT60LTR11AIP enables radar technology for everyone since it does not require RF, antenna design, or radar signal processing know-how. These features make the small-sized radar solution a compelling, smart, and cost-effective replacement for conventional PIR sensors in low-power or battery-powered applications. Also, with its small form factor, Infineon's highly integrated radar sensor solutions bring innovative, intuitive sensing capabilities to many applications. BGT60LTR11AIP has a high sensitivity and can detect if a person is present, and if the device needs to be ready – similar to a screensaver that deactivates the PC monitor after a certain time without mouse or keyboard input and reactivates it as soon as new input is noticed.

Features
- 3.3 x 6.7 x 0.56 mm^3 package size
- 1Tx 1Rx Antennas in Package (AIP) with 80° field of view
- Built-in motion and direction of motion detectors
- Multiple modes of operation including a completely autonomous mode
- Adjustable performance parameters: detection sensitivity, hold time, and frequency of operation
- FR4 material for PCB design is sufficient

Benefits
- Autonomous mode
  - Up to 7 m detection range
  - Less than 2 mW power consumption
  - Requires minimal external circuitry including crystal, LDO, and some resistors capacitors
- Adding a Cortex®-M0 MCU extends flexibility
  - Up to 14 m detection range (SPI mode)
  - Less than 2 mW power consumption possible

Application
- Smart building and smart home
- Home appliances
- Smart home security
- Room air conditioners
- Automated door openers
- Displays such as TVs, monitors, laptops, or tablets
- Lighting systems and lighting control

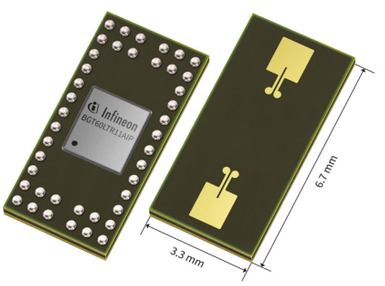

Block diagram

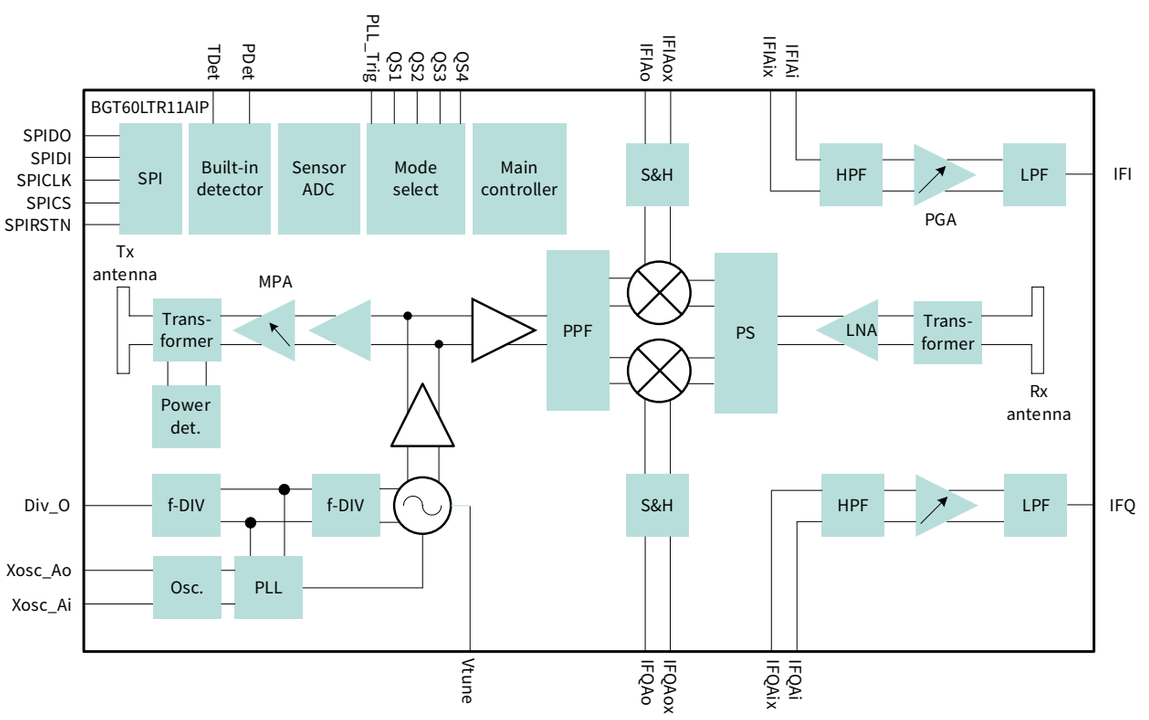

Click here to learn more:
www.infineon.com/radar-sensors

DEMO BGT60LTR11AIP
XENSIV™ 60 GHz demo board for motion sensing

This demo features Infineon's first completely autonomous radar sensor, the BGT60LTR11AIP. The 60 GHz radar MMIC is a fully integrated microwave motion sensor that includes antennas in package (AIP) as well as integrated detectors for motion and direction of motion. A state machine enables the device to operate without any external microcontroller. This autonomous mode detects a human target up to 7 m with a low-power consumption of less than 2 mW. These features make the small-sized radar solution a compelling, smart, and cost-effective replacement for conventional PIR sensors in low-power or battery-powered applications.

For evaluation of the BGT60LTR11AIP MMIC, this demo includes the BGT60LTR11AIP shield as well as the Infineon Radar Baseboard MCU7.

The BGT60LTR11AIP shield can be attached to an Arduino MKR board or the included Infineon Radar Baseboard MCU7. For the first evaluation of the radar sensor, we offer the DEMO BGT60LTR11AIP and the Radar Development Kit (RDK), which can be downloaded via the Infineon Developer Center (IDC).

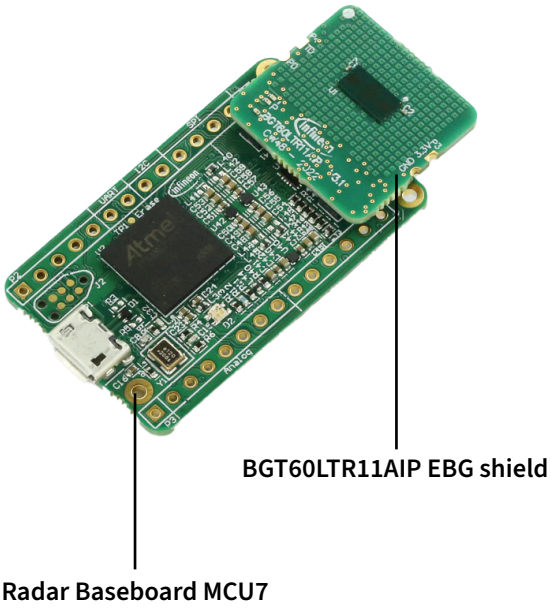

Click here to learn more:
www.infineon.com/radar-sensors

BGT60TR13C
XENSIV™ highly integrated 60 GHz radar sensor for consumer electronics and IoT applications

Enablement of horizontal and vertical angular measurement

The BGT60TR13C MMIC is a 60 GHz radar sensor with integrated antennas and comes with one transmitting and three receiving antennas. Thanks to the antennas in package (AIP) concept, the antenna design complexity at the user end can be eliminated and the PCB-designed with standard FR4 materials.

BGT60TR13C offers innovative and intuitive sensing capabilities

With its small form factor and low power consumption, BGT60TR13C MMIC brings innovative, intuitive sensing capabilities to many applications.

Features

- Integrated finite-state-machine (FSM)
- Very fast chirp speed: 400 MHz/µs
- High signal-to-noise ratio (SNR)
- Ultrawide bandwidth >5 GHz
- FMCW operation
- Integrated L-shaped antennas and small package size (6.5 x 5.0 x 0.9 mm^3)
- <5 mW (duty cycling according to released FCC waiver)

Benefits

- Allows semi-autonomous operation
- Highly configurable modulation and power modes
- MCU only needs to configure sensor and fetch data
- High velocity resolution
- People can be detected up to 15 m
- High sensitivity allows submillimeter level motion detection
- Allows simultaneous measurement of target range and velocity
- High accuracy of range measurements
- Reduced interference with other sensors
- L-shape enables horizontal and vertical angular measurements
- Thanks to small package size, PCB area can be saved and design-in process simplified
- Reduces average power consumption
- Optimized power modes for low power consumption

Based on the developed algorithm, the MMIC can serve established and new applications and use cases without intruding on privacy. Thanks to its feature set, the MMIC can measure velocity, angle, horizontal, and vertical.

BGT60TR13C demonstrates to be a powerful sensor for:

- Presence detection/localization/tracking: BGT60TR13C enables people presence detection, tracking, and localization while providing extremely high accuracy in detecting micro and macro motions
- Gesture sensing: BGT60TR13C ensures detection of submillimeter motions
- Vital sensing: BGT60TR13C is able to track vital signs in consumer electronics, healthcare as well as industrial applications

For first evaluation of the radar sensor, we offer the DEMO BGT60TR13C and the Radar Development Kit (RDK), which can be downloaded via the Infineon Developer Center (IDC).

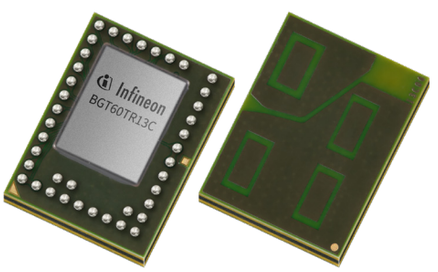

Applications

- Smart TV
- Heating ventilation and air conditioning (HVAC)
- Smart speaker
- Smart home and building
- Elderly monitoring
- Vital sensing
- Home appliances

Block diagram

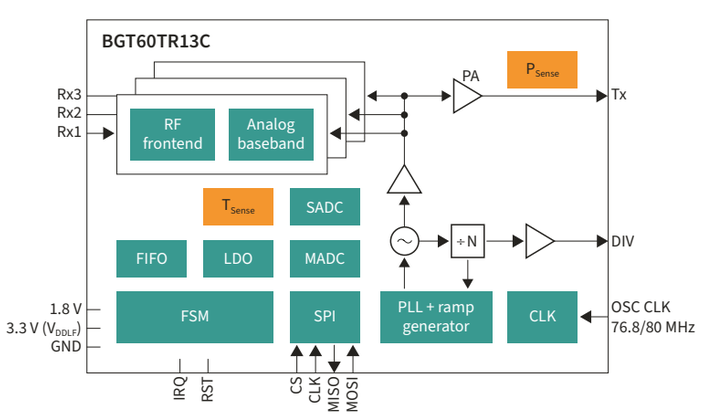

Click here to learn more:
www.infineon.com/radar-sensors

DEMO BGT60TR13C
XENSIV™ 60 GHz demo board for advanced sensing

BGT60TR13C offers innovative and intuitive sensing capabilities

This demo board features Infineon's XENSIV™ 60 GHz radar sensor BGT60TR13C, consisting of a Radar Baseboard MCU7 and a BGT60TR13C shield.

The radar baseboard is a 40.64 x 25.4 mm^2 printed circuit board (PCB). Its main purpose is to provide a generic sensor interface for BGT60TR13C MMIC. The central microcontroller unit (MCU) can process radar data or forward the sensor data to a USB interface or an Arduino MKR interface.

The BGT60TR13C shield presents a minimized form factor of 17 x 12.7 mm^2 and comes with an integrated BGT60TR13C Antenna-in-Package (AIP) radar chip of 6.5 x 5.0 x 0.85 mm^3. Moreover, the shield contains a digital interface for configuring and transferring the acquired radar data to a microcontroller board. The shield is optimized for fast prototyping designs, system integrations, and initial product feature evaluations. In addition, it offers developers the flexibility to choose their platform depending on their preferred use cases.

Benefits

- Flexible platform selection
- Variable connector options, and option to solder onto other PCBs
- Highly flexible configuration on FMCW modulation
- Power consumption can be optimized according to use case

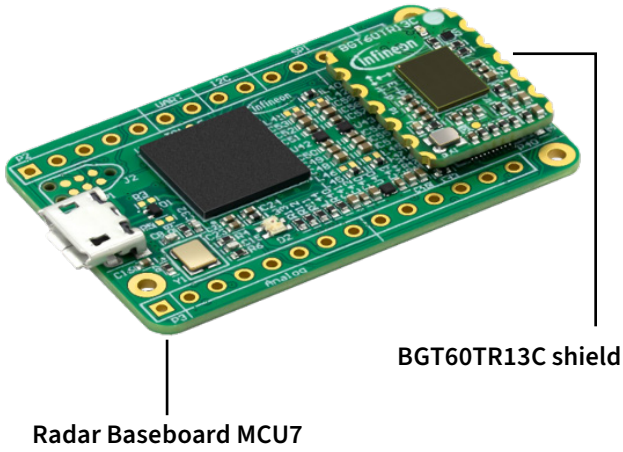

Click here to learn more:
www.infineon.com/radar-sensors

BGT60UTR11AIP
XENSIV™ highly integrated 60 GHz radar sensor for consumer electronics and IoT applications

The BGT60UTR11AIP is optimized for low power consumption and system cost optimization. Its compact size of only 16 mm^2 makes it suitable for integration into the smallest devices. The MMIC is manufactured using Infineon's B11 SiGe BiCMOS technology, ensuring excellent RF performance.

Its 5.6 GHz ultrawide bandwidth allows FMCW operations with extremely high resolution. The detection of sub-mm movements ensures not only extremely sensitive presence and motion detection up to a range of 15 m but also enables mm precise range measurements, 1D gestures, and the measurement of vital signs such as breathing rate and heart rate.

The sensor features a 50 MHz digital SPI interface for configuration and data transfer, while an integrated state machine enables real-time data acquisition without requiring constant interaction with the processor. With three different power modes, users can optimize between performance and power consumption. The BGT60UTR11AIP's sub-mA average current consumption makes it suitable for battery-powered devices.

For the first evaluation of the radar sensor, we offer the DEMO BGT60UTR11AIP and the Radar Development Kit (RDK), which can be downloaded via the Infineon Developer Center (IDC).

Features

- 60 GHz radar operating with 6 GHz bandwidth and ramp speed of up to 400 MHz/µs
- Antenna in package (AIP) with ±60° field of view (FoV)
- Integrated finite state machine (FSM) for low power consumption and real-time operation
- 4 MSps ADC sampling rate
- Single 50 MHz SPI for chip configuration and data transfer
- Broadcast mode to trigger and configure multiple devices

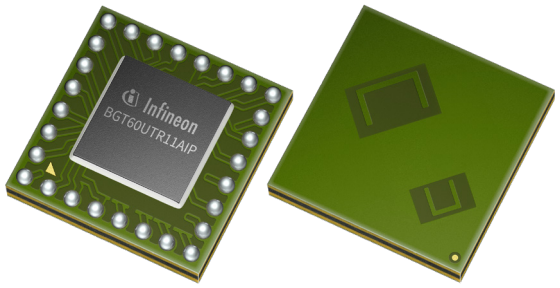

Benefits

- High sensitivity to detect sub-mm movements for human presence detection and vital sensing applications
- High bandwidth for precise distance measurements with mm accuracy
- Small size for integration into space-constrained environments
- Low power consumption for battery-driven applications

Applications

- Smart building devices, such as door locks, smart doorbells, and air conditioners
- Smart home devices, such as smart speakers and thermostats
- Smart appliances, such as refrigerators and kitchen machines
- Healthcare devices, such as baby monitors and sleep tracker
- Service robots, such as vacuum cleaners and lawn mowers
- Security devices, such as motion detectors and IP cameras
- Wearables such, as headphones and smartwatches
- TVs and notebooks

Click here to learn more:
www.infineon.com/radar-sensors

DEMO BGT60UTR11AIP
XENSIV™ BGT60UTR11AIP 60 GHz radar sensor FMCW demo board

This demo board features Infineon's 60 GHz XENSIV™ radar sensor BGT60UTR11AIP. It consists of a Radar Baseboard MCU7 Plus and a BGT60UTR11AIP sensor shield. The board can be used for product feature evaluations, fast prototyping, and radar algorithm development with the BGT60UTR11AIP.
The BGT60UTR11AIP MMIC has integrated antennas with one transmit and one receive antenna. With its compact size of only 16 mm² and extremely high FMCW performance (5.6 GHz bandwidth), this radar sensor is suitable for a wide range of applications.

The DEMO BGT60UTR11AIP board is supported by our Radar Development Kit (RDK), which can be downloaded from the Infineon Developer Center (IDC).

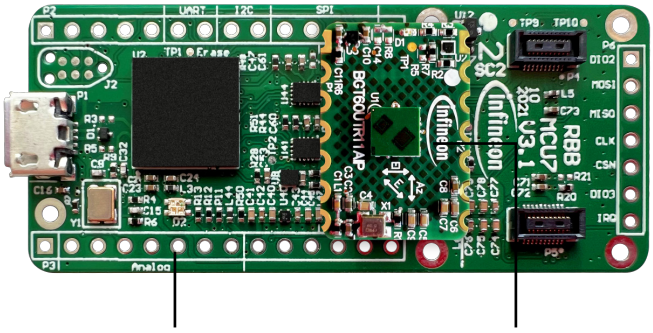

It contains the Radar Fusion GUI for an instant display of the radar signals as well as predefined applications such as presence detection or distance measurement. For further development of application-specific radar algorithms, C, C++, Python and MATLAB interfaces are provided.

Features of BGT60UTR11AIP shield
- 19 mm x 12.7 mm small form factor
- Digital SPI interface for configuration and data transfer to an MCU
- Standard FR4 laminate
- Castellated holes on the PCB edges for additional signal access
- MCU-controllable LED on board indicating radar sensor status
- 59 mm x 25.4 mm size
- Can perform radar data processing Arm® Cortex®-M7 processor or forward the sensor data to a USB interface or an Arduino MKR interface
- Hi-Speed USB 2.0 interface
- Operates with Radar Development Kit and Radar Fusion GUI

Benefits
- Flexible platform selection
- Variable connector options, and option to solder onto other PCBs
- Highly flexible configuration on the FMCW modulation
- Advanced functionalities by SPI configuration or further signal processing
- Power consumption can be optimized according to the radar use case

Applications
- Smart building devices, such as door locks, smart doorbells, and air conditioners
- Smart home devices, such as smart speakers and thermostats
- Smart appliances, such as refrigerators and kitchen machines
- Healthcare devices, such as baby monitors and sleep tracker
- Service robots, such as vacuum cleaners and lawn mowers
- Security devices, such as motion detectors and IP cameras
- Wearables such, as headphones and smartwatches
- TVs and notebooks

Click here to learn more:
www.infineon.com/radar-sensors

BGT60CUTR13AIP
First XENSIV™ 60 GHz CMOS radar with integrated processing for ultralow-power and cost-sensitive IoT applications

The XENSIV™ BGT60CUTR13AIP is the flagship device of Infineon's new CMOS radar sensor family for consumer and IoT applications. This sensor is optimized for ultralow power consumption and system cost efficiency. Manufactured using advanced 28 nm RF CMOS technology, the device features an integrated processing via a hardware accelerator, as well as integrated supporting structures such as LDO and XTAL.

The device can operate autonomously with its integrated hardware accelerator and dedicated bootloader. It can offload complex tasks from the host MCU by running pre-processing steps or direct motion detection on the chip.
The BGT60CUTR13AIP achieves exceptional resolution through its ultra-wide 7 GHz bandwidth FMCW operation, enabling detection of even sub-millimeter movements and micro-motions of nearly static targets. The improved output power of 11 dBm ensures reliable detection ranges of over 20 meters at boresight and up to 16 meters across the entire field of view.

The compact Antenna-in-Package (AIP) design features one transmit (Tx) channel and three receive (Rx) channels in an L-shaped antenna array. This design supports azimuth and elevation angle measurement, while maintaining a small form factor of just 4.3 x 6.05 mm^2. Overall, this cost-optimized solution offers an excellent balance of performance and affordability.

Features
- Package size: 4.3 x 6.05 x 0.9 mm^3
- 1Tx 3Rx Antenna-in-Package (AIP)
- 11 dBm output power
- 7 GHz ultra-wide bandwidth

Benefits
- Optimized for ultralow power consumption and battery-powered IoT use cases
- On-chip processing enabled by a hardware accelerator
- Integrated bootloader for autonomous wake-up of the host processor

Applications
- Room air conditioner (HVAC)
- Smart home and building
- Security camera and video doorbell
- Smart TV
- Smart thermostat
- Lighting system

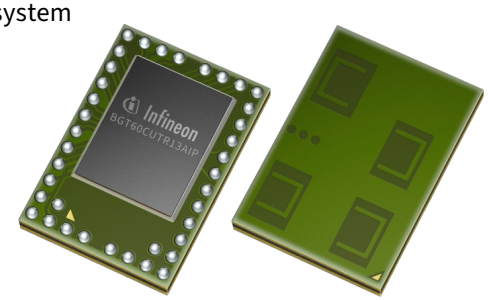

Block diagram

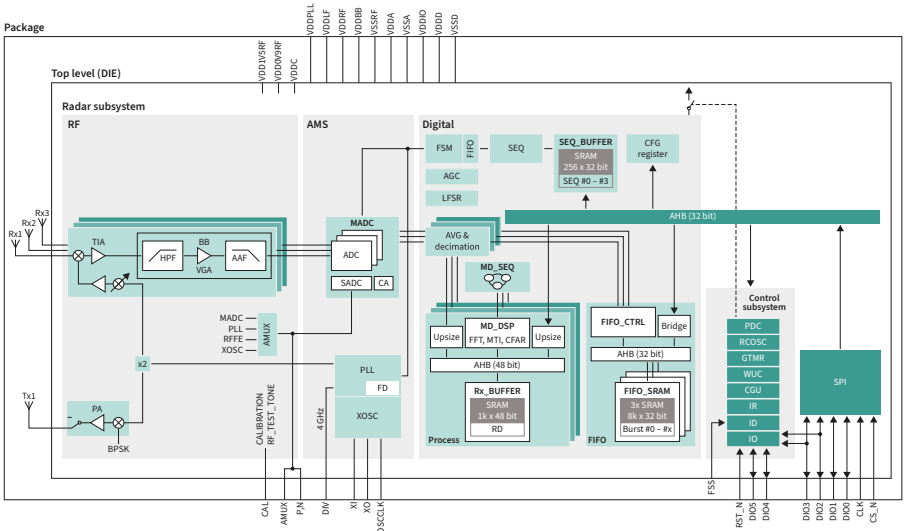

Click here to learn more:
www.infineon.com/radar-sensors

24 GHz radar sensors for consumer and IoT

Infineon's range of 24 GHz industrial radar chips provides five configurations of the transmit and receiver channels, ensuring that there is a chip to support your specific application. From basic applications such as motion detection in security systems, which only requires one transmit and one receive channel, to more complex applications like 3D positioning, which requires two or more receive channels, our range of radar chips supports all of your requirements.

Features	Infineon MMIC	Benefits
– 24 GHz ISM band operation for motion, speed, direction movement and distance measurements – Five 24 GHz chips available – Highly integrated MMICs	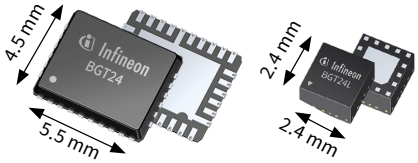	– Long-range distance detection of moving objects up to 50 m – Wide range speed detection up to ±100 km/h – Low BOM costs

Product	Configuration	Features	
BGT24LTR11	1Tx + 1Rx	– Measures, not just motion, but also speed, direction, and distance – Small form factor – Resistance to moisture, dirt, and temperature – Increased area coverage – Discrete design	– Low power MMICs for energy saving – Privacy protection – Adaptable to different application requirements – Highly integrated chips eliminating costly external components
BGT24LTR22	2Tx + 2Rx		

BGT24LTR22
XENSIV™ 24 GHz radar sensor

Features

- 24 GHz transceiver MMIC
- Fully integrated low phase noise VCO
- Integrated analog base band stage with programmable gain and filter settings
- Bidirectional pin for synchronization
- Built-in temperature compensation circuit for VCO stabilization, no PLL needed
- Low power consumption
- Fully ESD protected device
- Single-ended RF and IF terminals
- Single supply voltage 1.5 V

Block diagram

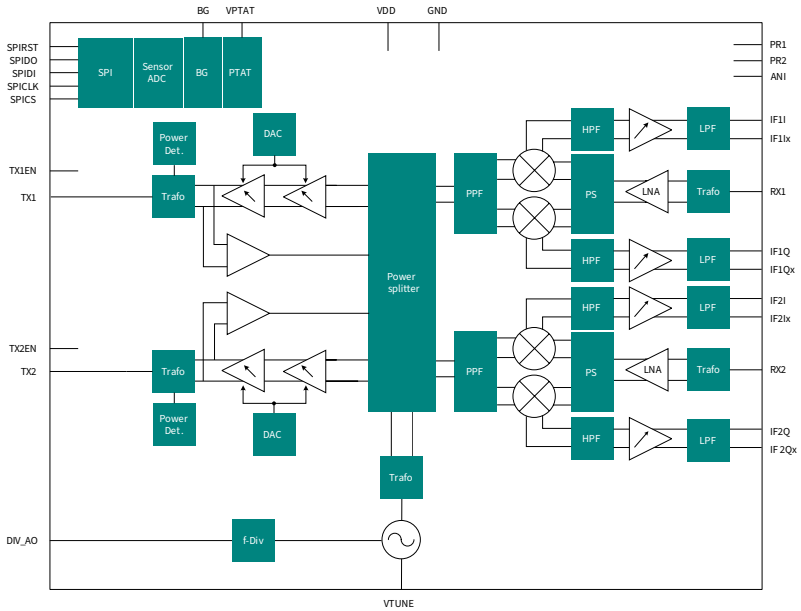

Click here to learn more:
www.infineon.com/radar-sensors

Radar module partners

Infineon Partner Program

Strategic partnerships for radar innovation

Infineon's XENSIV™ radar sensor partners offer a complete range of cost-effective design services, turnkey solutions, and product accelerators to help our customers shorten their time-to-market, achieve a higher market share, revenue, and create new business opportunities. Working closely with you, our partners are equipped to handle all aspects of the development process of radar-based solutions from hardware and software design to prototyping, integration, RF testing, and certification. Our partners are skilled at delivering tailored radar-based expertise to meet specific customer needs, including those with unique requirements to support dedicated use cases, and comply with industry standards and regulations.

Accelerating radar modules prototyping and compliance

Our XENSIV™ radar sensor hardware module partners offer a wide range of development and evaluation kits, including optimized hardware modules such as system-on-modules (SOMs), which can be integrated into final hardware platforms. These modules allow for quick creation and verification of use cases, making them ideal as prototype hardware for application design. They also facilitate the transition to production while reducing development time, which is essential in the fast-paced world of hardware development. Moreover, our hardware partners can assist our customers in the design of hardware components such as antennas, transceivers, and millimeter-wave radio frequency components. This ensures that the designed radar module complies with regulatory requirements, such as FCC, CE, or other local standards.

Leading the way in innovative radar software solutions

Our radar software solutions partners contribute significantly to developing innovative radar-enabled applications and algorithms. They enhance the capabilities of our XENSIV™ radar sensors and also excel the implementation in various industries. Our partners showcase their proficiency in seamlessly integrating radar technology with notable strengths spanning automotive, industrial automation, smart cities, and beyond. This involves delving into sophisticated signal processing capabilities that our partners bring to the table, including fine-tuning radar data to achieve unparalleled precision and accuracy. Additionally, witness the seamless integration of machine learning and AI algorithms, elevating the intelligence and adaptability of radar systems to new heights. This dynamic fusion of advanced signal processing and machine learning integration reflects our software partners' commitment to pushing the boundaries of innovation in the radar technology landscape.

Our trusted network of XENSIV™ radar sensor partners is helping you accelerate your product's time-to-market by minimizing your development time. Learn more about our partner program and discover our partners' solutions here.

Do you have a question?

Learn more and ask questions in our Infineon Developer Community.

Click here to learn more:
www.infineon.com/radar-sensors

XENSIV™ connected sensor kit

Rapid IoT prototyping experience enabled by XENSIV™ sensors

The XENSIV™ connected sensor kit enables rapid development of a custom solution built on Infineon products. The CSK supports customers in testing sensor-driven IoT products and use cases, as well as in prototyping. It offers a real-time sensor evaluation with custom configurations. The development kit supports use cases based on XENSIV™ sensors, e.g., BGT60CUTR13AIP, BGT60TR13C and BGT60UTR11AIP 60 GHz radars, and DPS368 pressure sensor (sense), PSOC™ 62 microcontroller embedded processing (compute), connectivity via Infineon AIROC™ CYW43012 dual-band 2.4 GHz and 5 GHz Wi-Fi 4 (802.11n) and Bluetooth® 5.4 combo radio module (connect), and hardware security with OPTIGA™ Trust M (secure). Code examples and sensor libraries are available in the ModusToolbox™ to help customers create use case-specific application codes for new product offerings.

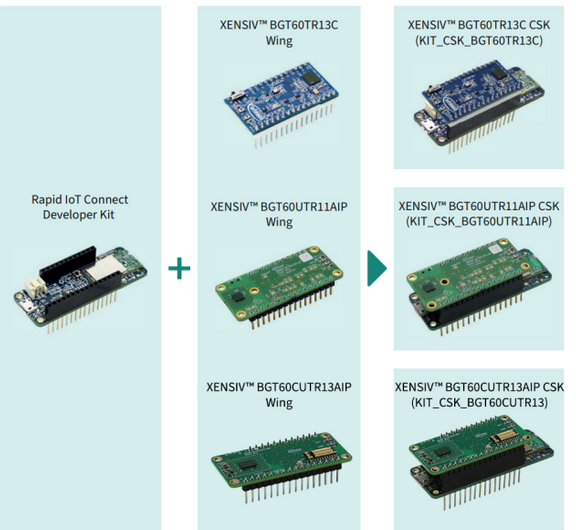

Features

- Small form factor: 22.5 x 63 x 30 mm^3 – Adafruit Feather compatible
- Wi-Fi and Bluetooth® 5.0-compliant combo radio module
- Power optimized design, deployable with battery
- Interchangeable sensor Wing boards stacked individually or combined
- Seamless integration into ModusToolbox™
- FCC and CE certified

Benefits

- Ideal for prototyping battery-powered IoT devices due to optimized power consumption. Suited for customer field trials.
- Rapid development and deployment via code examples in ModusToolbox™ for presence detection, entrance counter, air quality measurements. Enabler for multi-sensor data fusion.

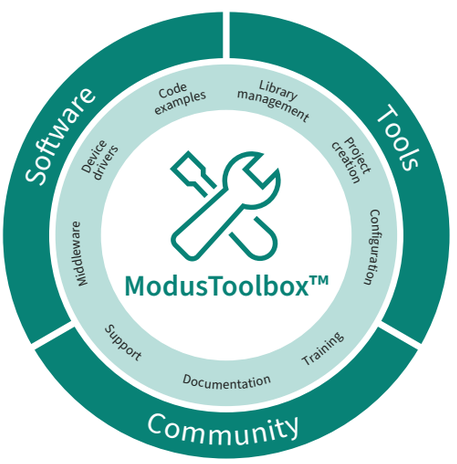

Product	Description	OPN No.
KIT_CSK_BGT60TR13C	Connected sensor kit (CSK) featuring XENSIV™ BGT60TR13C 60 GHz radar sensor Wing board	KITCSKBGT60TR13CTOBO1
KIT_CSK_BGT60UTR11AIP	Connected sensor kit (CSK) featuring XENSIV™ BGT60UTR11AIP 60 GHz radar sensor Wing board	KITCSKBGT60UTR11AIPTOBO1
KIT_CSK_BGT60CUTR13	Connected sensor kit (CSK) featuring XENSIV™ BGT60CUTR13AIP 60 GHz CMOS radar sensor Wing board	KITCSKBGT60CUTR13TOBO1

Click here to learn more:
www.infineon.com/gas-sensors

Shield2Go

Infineon's Shield2Go boards offer a unique customer and evaluation experience

The boards are equipped with one Infineon IC and a ready-to-use Arduino library. Customers can now develop their own system solutions by combining Sensor2Go boards together with Infineon MyIoT adapters. MyIoT adapters are gateways to external hardware solutions like Arduino and Raspberry Pi, popular IoT hardware platforms. All this enables the fastest evaluation and development of the IoT system.

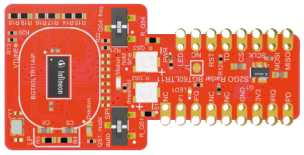	**Product name:** BGT60LTR11AIP Radar Shield2Go **Sales name:** S2GO RADAR BGT60LTR11 **Ordering code:** SP005594890	Product information
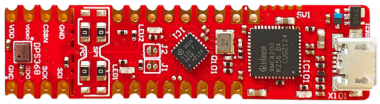	**Product name:** DPS368 pressure sensor Shield2Go **Sales name:** KIT_DPS368_2GO **Ordering code:** SP005729572	Product information
	**Product name:** TLE493DW2B6 3D Sense Shield2Go **Sales name:** S2GO_3D_TLE493DW2B6-A0 **Ordering code:** SP004308594	Product information
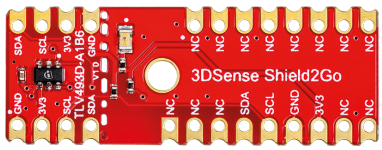	**Product name:** TLV493D 3D Sense Shield2Go **Sales name:** S2GO_3D-SENSE_TLV493D **Ordering code:** SP001823678	Product information
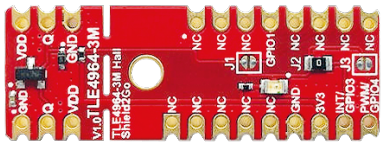	**Product name:** TLE4964-3M Hall Sense Shield2Go **Sales name:** S2GO_HALL_TLE4964-3M **Ordering code:** SP004308590	Product information
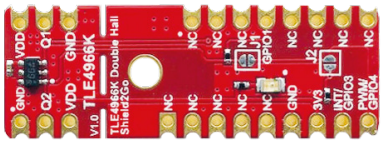	**Product name:** TLE4966K Double Hall Sense Shield2Go **Sales name:** S2GO_2_HALL_TLE4966K **Ordering code:** SP004308598	Product information

Click here to learn more:

www.infineon.com/magnetic-position-sensors www.infineon.com/current-sensors www.infineon.com/gas-sensors
www.infineon.com/pressure-sensors www.infineon.com/mems-microphones www.infineon.com/radar-sensors

Shield2Go

Microcontroller



Product name: XMC1400 2Go kit
Sales name: KIT_XMC14_2GO
Ordering code: SP006065576

Product information

MyIoT Adapter

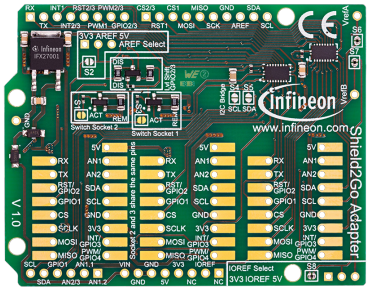

Product name: MyIoT Adapter
Sales name: MY IOT ADAPTER
Ordering code: SP002434972

Infineon's Shield2Go boards offer a unique customer and evaluation experience – the boards are equipped with one Infineon IC and a ready-to-use Arduino library. Customers can now develop their own system solutions by combining Shield2Go boards with Infineon MyIoT adapters.
MyIoT adapters are gateways to external hardware solutions like Arduino and Raspberry Pi, popular IoT hardware platforms. This enables the fastest evaluation and development of IoT systems.

Product information

XENSIV™ Sensor Shield

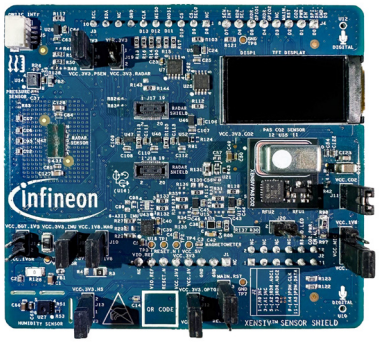

Product name: XENSIV™ Sensor Shield
Sales name: SHIELD_XENSIV_A
Ordering code: SP006018677

Infineon's XENSIV™ Sensor Shield provides seamless hardware compatibility between sensors, microcontrollers, and connectivity products. When paired with an MCU / Wi-Fi baseboard via the Arduino UNO interface, the board enables developers to quickly evaluate and develop with environmental sensors like:

- 60 GHz radars
- PDM microphones
- Pressure sensors
- Six-axis IMU
- Three-axis magnetometer
- Temperature and humidity

The shield also features a TFT display (80x160), and OPTIGA™ Trust-M secure element, and a QWIIC connector for additional peripheral expandability.

Product information

Click here to learn more:

www.infineon.com/magnetic-position-sensors
www.infineon.com/current-sensors
www.infineon.com/gas-sensors
www.infineon.com/pressure-sensors
www.infineon.com/mems-microphones
www.infineon.com/radar-sensors

ISO 26262 – Functional Safety (FuSa)

Dependable electronics based on Functional Safety

Automotive Functional Safety – we simplify the process of integrating safety features with our safety guidelines and services.

Infineon provides dependable electronics to support today's safety-relevant systems and future fail-operational solutions, serving as essential components that allow customers to meet their safety requirements at the application level. Highly integrated systems equipped with reliable electronic semiconductors play a crucial role in key application areas like connectivity, electromobility, and advanced levels of automated driving. The ISO 26262 standard establishes requirements and provides guidance for integrating products into automotive safety applications.

Discover Infineon's products with ISO 26262 classification

With our holistic approach to functional safety, Infineon is addressing the increased complexity and stringent requirements that make functional safety projects costly and time-consuming. We provide the necessary products, including documentation and supporting information, to ease integration and reduce efforts for system integrators.

Benefit from:

- Innovative solutions for automotive safety-related applications
- Improved time-to-market through comprehensive safety documentation for ISO 26262-compliant products
- Reduced integrators' efforts with ISO 26262-compliant and ready-to-use products
- A broad portfolio of ISO 26262-compliant products already available
- Newly developed automotive parts that will primarily follow an ISO 26262-compliant development flow

Safety conformity levels:

- PRO-SIL™ ISO 26262-compliant devices meet all relevant requirements for semiconductors as defined in the ISO 26262 series of standards for automotive functional safety
- The PRO-SIL™ ISO 26262-ready marking designates QM devices that can be integrated into a safety-related application by utilizing the ISO 26262:2018 Clause 8-13, Class II hardware evaluation framework
- The Infineon Automotive Ensured Compliance process framework was certified by SGS-TÜV Saar for compliance with ISO 26262:2018 as of April 2022. This certification reinforces our commitment to automotive functional safety

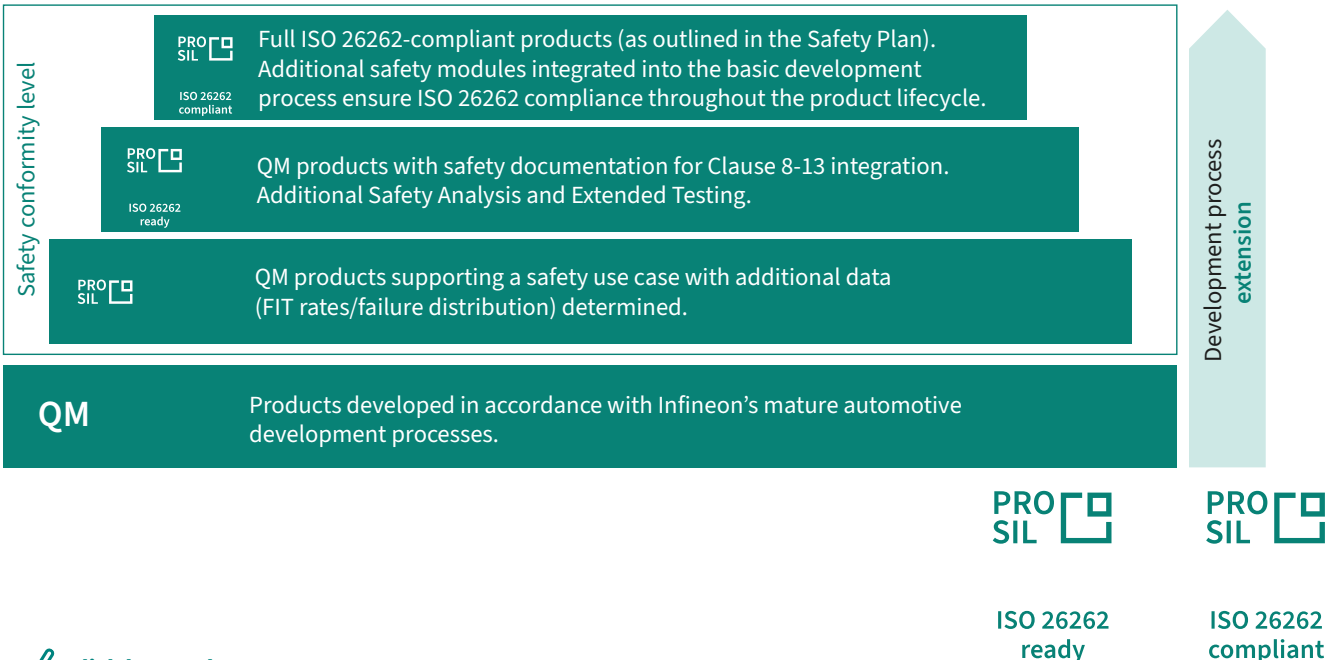

Click here to learn more:

www.infineon.com/magnetic-position-sensors
www.infineon.com/current-sensors
www.infineon.com/gas-sensors
www.infineon.com/pressure-sensors
www.infineon.com/mems-microphones
www.infineon.com/radar-sensors

Dependability is the key driver for the megatrend towards autonomous driving

The future car will be fully connected and always online. It will be all-electric and autonomous. At Infineon, we believe that realizing this vision requires both technology and trust.

The growing demand for safe electronic systems in vehicles that drivers and passengers can rely on lays the foundation for trust and drives progress toward higher levels of automated driving.

Earning the trust of tomorrow's passengers begins with dependable electronics that enable highly available, reliable, robust, safe, and secure systems, capable of operating in all conditions.

Infineon is your trusted partner, offering all the essential components for your dependable systems – automotive quality, functional safety, cybersecurity, innovative products, system expertise, and operational excellence.

Dependable electronics for safer, smarter vehicles

As vehicles become increasingly reliant on electronic components, demand for safe, reliable systems continues to grow. Rising levels of automated driving especially depend on drivers' and passengers' trust in the quality and reliability of each component. The complexity and requirements in the automotive industry are expected to increase further, particularly in terms of quality and dependability, to ensure vehicles operate safely and smoothly throughout their 15-year lifespan.

Infineon's commitment to delivering high-quality, dependable products has resulted in a portfolio that offers superior performance and unmatched durability, driven by our zero-defect mentality. We go beyond industry standards to meet the real-world requirements of applications.

Enhance your automotive systems and applications with our high-quality semiconductor components designed for your needs.

Dependable electronics based on quality
Automotive quality beyond the standards with a zero-defect mindset.
Vehicle complexity and functionality will continue to grow, driving the need for dependable electronics, with quality being one of its key ingredients. Our passion for quality creates a product portfolio that meets high standards and delivers highly reliable, robust products.

How Infineon differentiates as a quality leader:

1. Our goal is to go beyond standards to better meet real application requirements: from intensive screening methods to detect production defects, to advanced AEC Q100/101 tests (where required), to sub-1 dpm validation aimed at achieving ultralow defect rates.
2. Our track record of achievements, including multiple quality awards from customers such as Toyota (Honor Quality Award in 2020) and Continental (Supplier of the Year in 2019), demonstrates that we consistently meet and exceed outstanding quality targets in the automotive industry.
3. Infineon offers best-in-class customer service, supported by a regional network of failure analysis labs, strong localized expertise, technical training programs, and state-of-the-art regional quality analysis labs equipped for advanced failure analysis.
4. We meet customer needs through industry-leading product requirements, design, manufacturing, and testing practices. Quality is integrated into our development processes (e.g., RDDF), design rules (e.g., ADeGo), materials, manufacturing processes, process controls, proprietary testing, and screening methods.

Infineon's Zero Defect mentality is built upon:

- Producing 24/7/365 at sub-dpm levels: Translated into a year's timeline, this means we deliver zero defects for all but the last three seconds of the year.
- Delivering sub-ppm quality levels.
- Achieving Zero Defect status for 90 percent of our products.

We go beyond the standards to better meet real application requirements.

Click here to learn more:

www.infineon.com/magnetic-position-sensors
www.infineon.com/current-sensors
www.infineon.com/gas-sensors
www.infineon.com/pressure-sensors
www.infineon.com/mems-microphones
www.infineon.com/radar-sensors



Infineon support for sensors

Useful links and helpful information

Further information, datasheets, and documents

www.infineon.com/xensiv
www.infineon.com/sensors
www.infineon.com/tof-3d-image-sensors
www.infineon.com/current-sensors
www.infineon.com/gas-sensors
www.infineon.com/h2-sensors
www.infineon.com/inductive-position-sensors
www.infineon.com/mems-microphones
www.infineon.com/pressure-sensors
www.infineon.com/radar-sensors
www.infineon.com/magnetic-position-sensors
www.infineon.com/3d-sensors
www.infineon.com/angle-sensors
www.infineon.com/linear-sensors
www.infineon.com/switches-latches

Info
Documents
Boards and designs
Tools
Play



Infineon powerful support

Find an answer to your question

About Infineon
www.infineon.com/green
www.infineon.com/quality

General support
www.infineon.com/support
www.infineon.com/packages
www.infineon.com/wheretobuy
www.infineon.com/opn
www.infineon.com/academy

Design Resources
Solution finder
Evaluation boards finder
Simulation and modeling
Infineon Designer
Infineon for Makers

Connect with us
Infineon developer community
Facebook
Instagram
LinkedIn
Youtube

Subscribe to marketing communications here

Contact our technical support here



Infineon customized solutions

Your specific needs, realized

A customized solution (commonly known in the industry as an ASIC — Application Specific IC, or CSP — Customer Specific Product) is designed, planned, developed, and used for a specific purpose. Its mission is to be optimized and efficient, with all the required functionalities and features for a specific application for a single customer.

Infineon as your one-stop-shop from design to delivery

Infineon, as a market leader in customized solutions, believes innovation comes through collaboration and exploring new paths. Working closely with our customers, understanding their needs, and combining their needs with our cutting-edge solutions, we know there is always a benefit for every customer and application. Whether the challenge is related to IP or BOM constraints or requires higher integration, an ASIC can be the solution. Furthermore, customers benefit from Infineon's trusted quality, supply guarantee, and experience, combined with additional advantages such as IP protection and a well-established partner network.

Click here to learn more:
www.infineon.com/asic



A process streamlined through efficiency, expertise, and experience

The journey starts with you and a focus on feasibility – we match your needs early on with our 40 years of expertise in building world-class, industry-leading semiconductors and ensure the successful implementation of your requirements.

From technology advantage to supply stability

Whether it is digital, analog, or mixed-signal devices, an embedded processor, or integrated sensors, we have the experience and product know-how. Being one of the largest semiconductor companies, we also have a vast array of IPs. We can integrate almost anything into your chip from our wide variety of sensors, discrete devices, drivers, and many more, including support for higher voltage levels. Our in-house fabrication facilities and design centers around the globe are known for the highest quality standards. We also have well-established partnerships with all major silicon foundries and assembly test fabs to complement our in-house technologies. At every step along the way, we take pride in the highest quality Infineon is known for.

If you are interested and would like to find out further information, visit **www.infineon.com/asic**

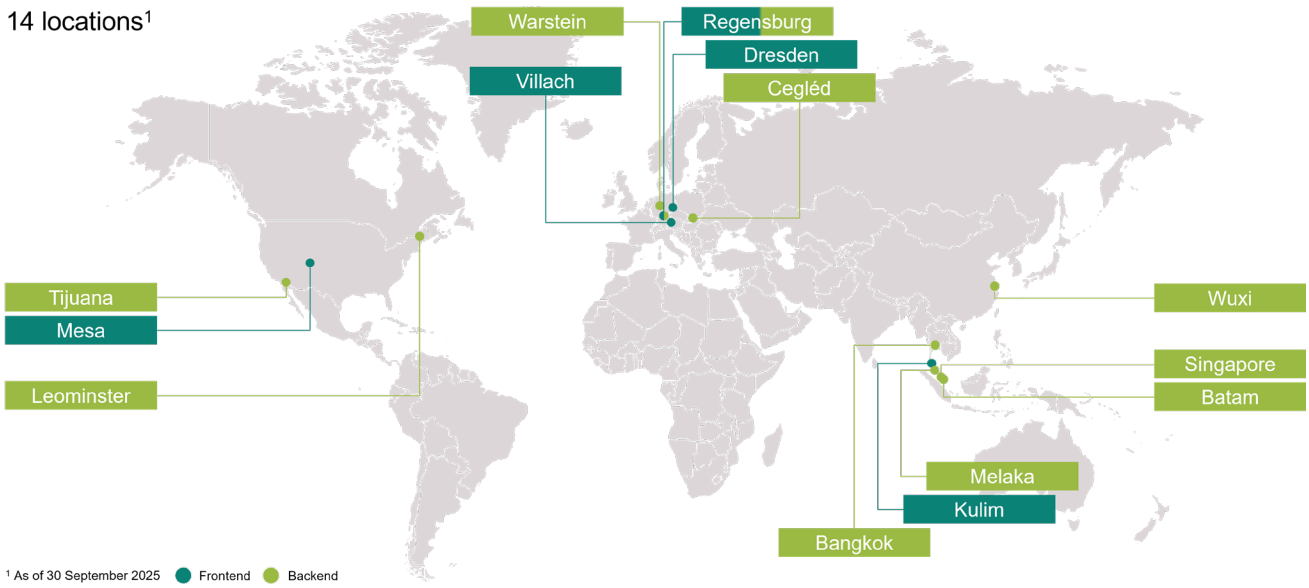

Click here to learn more:
www.infineon.com/asic



The Infineon Partner Program

Together we create and innovate for our customers' success

Find solutions from our partners to accelerate your next business opportunity. Infineon's global network of partners is an expert in designing products, solutions, and services leveraging Infineon components in 5 key domains: software, hardware, services, tools, and end applications.

The Infineon Partner Program is a global ecosystem of qualified companies, offering knowledge and experience to enable and implement Infineon products. Our associated, preferred, and premium partners help design your device and application based on our components. They have been carefully selected by us on the basis of their competence and ability to design and deliver strong and trustworthy solutions, especially for new technologies and use cases.

Hardware	Software	Tools	Services	End applications
Partners manufacturing electronic components, demo boards, and turnkey modules	Partners programming various types of software, algorithms, and operating systems	Partners designing computer programs for the development of embedded systems	Partners providing cloud and engineering services, application support or trainings	Partners creating end products and related applications
... jointly we create and commercialize value-added solutions, while reaching new buyers	... jointly we enhance our portfolio with complementary components and expand technology know-how	... jointly we enable a complete and immersive development experience for customers	... jointly we build up engineering capabilities and offer them to a world class customer network	... jointly we provide customers with state-of-the-art solutions and innovative use cases

Find out more about the Infineon Partner Program, the latest news and solutions from our partners, and much more on our Partner ecosystems webpage.

Looking for a specific partner solution in your region? Our partner finder provides an overview of our partners and their offerings. Simply specify your search in the dropdown menu and browse through the companies and their solutions to navigate directly to the respective website for further information.

Additionally, use the "Partner solutions" tab on our product and application pages to find out more about Infineon's partner solutions.

Click here to learn more:
www.infineon.com/partners

Published by
Infineon Technologies AG
Am Campeon 1-15, 85579 Neubiberg
Germany

© 2026 Infineon Technologies AG.
All rights reserved.

Public

Version: V1.0_EN
Date: 05/2026

Stay connected!

Scan QR code and explore offering
www.infineon.com