

USB selection guide

USB power and data solutions for consumer, industrial, and automotive applications

www.infineon.com/usb

Table of contents

Introduction 03

USB-C power delivery controllers 07

Moving to USB-C with EZ-PD™ family 09
- EZ-PD™ barrel connector replacement 10
- EZ-PD™ PMG1 high voltage microcontrollers with USB-C PD 12

EZ-PD™ CCG8 and CCG8 CFP USB-C PD controllers 16
EZ-PD™ CMG2 USB-C EMCA controller 18
EZ-PD™ PAG2 USB PD and DC-DC controller 20
EZ-PD™ CCG7Xc and CCG7SCF consumer single/dual-port USB-C PD controller 22
EZ-PD™ CCG7S automotive single-port USB-C PD controller 25
EZ-PD™ CCG7D automotive dual-port USB-C PD controller 27

Peripheral controllers for USB 3.2 29

EZ-USB™ FX5, FX5N, FX10 and FX20 peripheral controllers 29

Peripheral controllers for USB 2.0 31

EZ-USB™ FX2G3 USB 2.0 peripheral controller 31
EZ-USB™ serial bridge controller 34

USB hubs and USB Type-C port controllers 37
EZ-USB™ HX3 USB 5 Gbps hub controller 38

EZ-USB™ HX2G3 USB 2.0 hub controller 40
EZ-USB™ HX3PD SUB 10 Gbps hub controller with USB PD 42

Infineon powerful support 45

Introduction

The Universal Serial Bus (USB) Type-C

With a complete portfolio of Universal Serial Bus (USB) solutions for consumer, industrial and automotive applications, Infineon leads the industry with over one billion units shipped and continuous innovation in emerging USB technologies. It provides a one-stop shop for all USB needs and enables customers to get to market faster, gaining a competitive advantage with its turnkey solution, including software, reference designs, and driver suites.

Why USB-C became the universal connector of choice

USB connector evolution

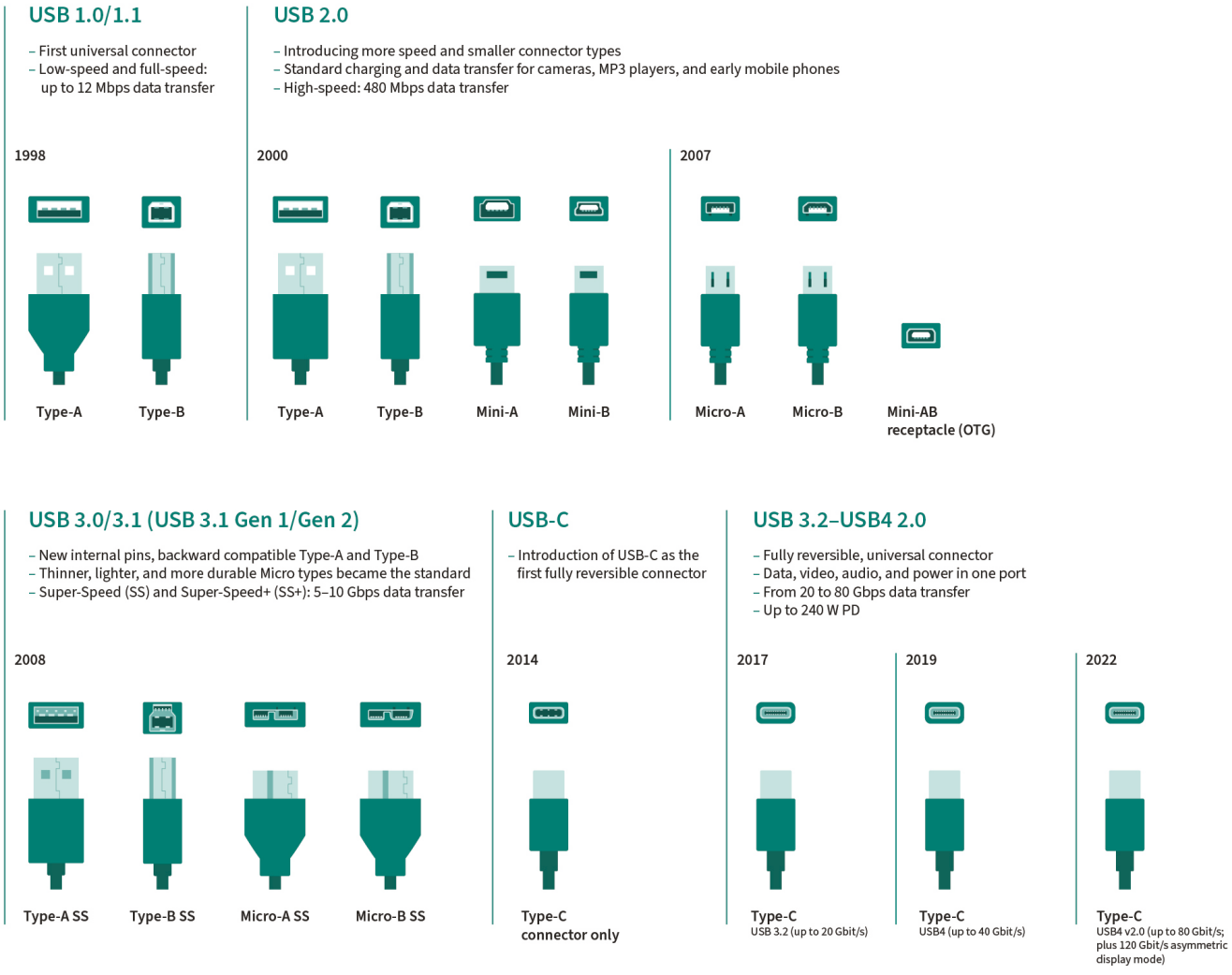

www.infineon.com/usb

Traditional power adapters relied on a wide range of incompatible connectors, fixed voltages, and limited current capabilities, making them impossible to share across devices and contributing heavily to cable clutter and e-waste. USB-C, by contrast, is a truly universal connector: a compact, fully reversible interface capable of negotiating voltage and current levels up to 240 W (48 V, 5 A) under USB power delivery, able to support high-speed data rates up to 80 Gbps through USB4.

For consumers, USB-C means one charger and one cable can power and transfer data across nearly all modern electronics, eliminating the need to accumulate and replace dozens of device-specific adapters. This reduces both cost and electronic waste, an issue amplified by earlier transitions from Mini-USB to Micro-USB.

Why USB-C

One port for all
Scalable by design, future-proof for tomorrow

High-performance power
Up to 240 W and smart power negotiation

High bandwidth data
Up to 80 Gbps for video, storage, and docking

Why USB-C matters today

USB-C has become essential in modern electronics because it solves the biggest limitations of previous connector standards while enabling new levels of performance, universality, and sustainability. But USB-C's importance today extends far beyond technical advantages. Around the world, regulators are increasingly mandating universal charging standards to reduce electronic waste, with the European Union leading the way through its landmark Common Charger Directive. This legislation requires USB-C as the mandatory charging port for ten categories of portable consumer electronics starting in December 2024, with the scope expanding to eleven categories when laptops are added from 28 April 2026.

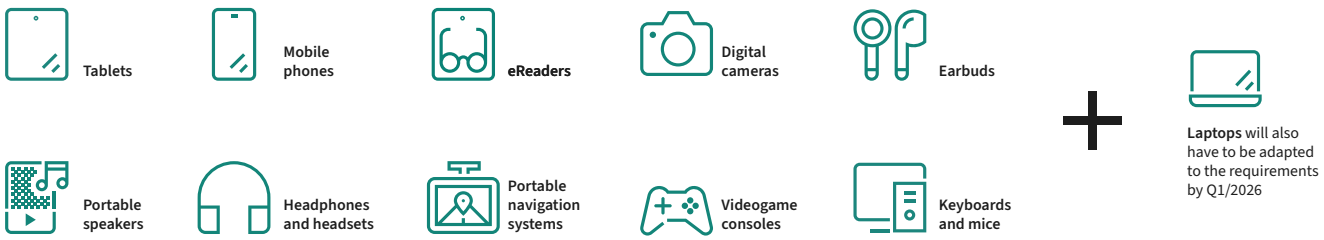

As more regions adopt similar sustainability-driven policies, USB-C is no longer just a convenience feature: it is becoming a compliance requirement and a cornerstone of environmentally responsible product design.

www.infineon.com/usb

Benefits of USB-C for OEMs/manufacturers

For manufacturers, embracing USB-C delivers benefits that go far beyond simply meeting new regulations. Standardizing on a single, universal connector reduces production costs by eliminating the need to design, source, and ship multiple proprietary chargers and cables. It also simplifies global logistics—especially as free-in-box chargers disappear—while allowing companies to reuse the same power and interface solutions across entire product families.

This consolidation streamlines product portfolios, reduces component variation, and supports the industry-wide shift toward circular, waste-reducing electronics. Most importantly, USB-C frees R&D teams from managing legacy connector fragmentation, enabling them to focus on the features and innovations that truly differentiate their products, accelerate development cycles, and shorten time to market.

Said so, embracing USB-C for manufacturers means **future-proof performance, regulatory compliance, and meaningful environmental impact,** all at once.

USB applications

USB-C has become essential across a rapidly widening range of applications and industries. While it is already the default connector for consumer electronics, its simplicity, high power capability, and universal form factor are now driving adoption in higher-power segments such as power tools, light electric vehicles, and portable home appliances, where a single robust connector can streamline charging and reduce accessory complexity. The shift of smartphones and tablets to USB-C has also accelerated the transition in automotive interiors, where in-cabin chargers increasingly rely on USB-C power delivery controllers to support fast and reliable charging for multiple passenger devices.

Beyond power, USB-C has also established itself as a versatile data interface across industrial environments. It is widely used in machine vision, data acquisition, test and measurement, medical devices, and robotics, leveraging USB 2.0 and USB 3.2 for reliable connectivity in fields ranging from factory automation to life sciences, retail systems, and security and surveillance. As newer USB data rates such as 10 Gbps and 20 Gbps become mainstream, USB-C continues to unlock advanced, bandwidth-intensive applications and bring digitalization into an even broader set of industries.

www.infineon.com/usb

Why choosing Infineon for your connectivity needs

Full interoperability
USB-IF certified solutions for seamless plug-and-play interoperability

Market proven devices
Over five billion units shipped worldwide

Best in class support
Wide documental support, software suites, code examples, and peer2peer support via the Developer Community

Infineon has been the absolute leader in the USB space, with over one billion units shipped and continuous innovation in emerging USB technologies. In October 2014 the first USB PD controller was introduced to the market, and, ever since, it kept innovating in power and data transfer.

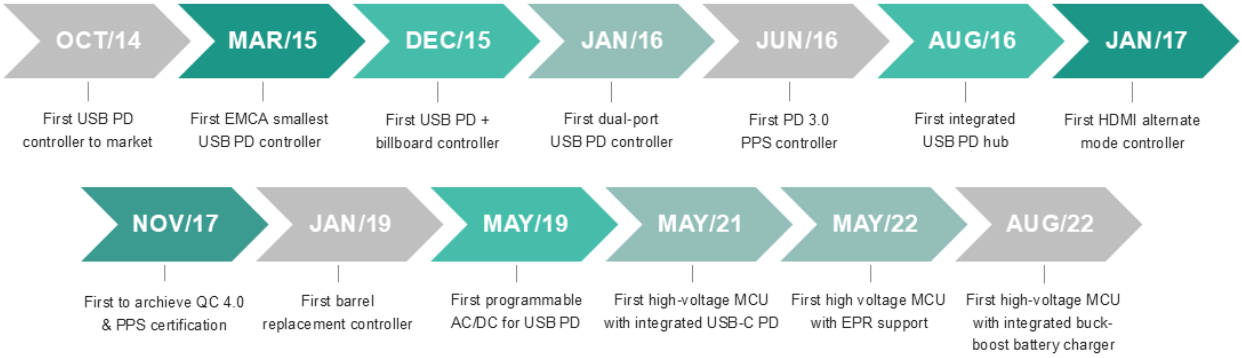

Today the portfolio covers power adapters, cables, automotive, compute, and consumer electronics applications with market-proven, USB-IF certified, highly integrated solutions.

www.infineon.com/usb

USB-C power delivery controllers

Leading the industry with over five billion USB-C devices shipped

USB-C is the universal connector of choice and has gained rapid industry support thanks to its flexibility to transmit multiple data protocols, such as USB4, Thunderbolt, and HDMI. Additionally, it simultaneously provides up to 240 W of power via USB PD, enables slim industrial designs and features easy-to-use connectors and cables. Its adoption also has a significant impact on the environment, dramatically reducing the e-waste produced by the more than one million tons of proprietary chargers that get shipped every year. Infineon's EZ-PD™ portfolio is the industry's most complete portfolio of USB-C power delivery solutions, enabling more robust end-to-end power delivery and charging solutions for laptop and mobile devices. The USB-C power delivery standard supports fast charging up to 240 W and DisplayPort connectivity over an industry-standard USB-C connector, enabling the transmission of both data and power on a single cable. Infineon also offers AEC-Q100 certified versions of its controllers for automotive-grade performance. As the leader in USB-C end-to-end solutions, Infineon also provides a comprehensive portfolio of solutions for USB-C adapters and chargers.

Features and benefits

Key features

- Supports latest USB-C power delivery protocols
- Offers programmable USB-C PD solution
- Offers firmware upgradability with built-in Flash
- Supports secure FW update with hardware crypto
- Integrates high-voltage circuits
- Integrates VBUS fault protections
- Offered in QFN, BGA, and WLCSP packages

Key benefits

- Interoperability
- Easy customization using the SDK
- Easy integration into your application
- Programmability for higher flexibility and shorter time to market
- Highly integrated dual/single port USB-C PD controllers for optimized BOM

Power source	Power source (auto)	Cable	Dock	Notebook/PC	Broad market electronics
USB PD controllers: – EZ-PD™ CCG3PA – EZ-PD™ CCG3PA-NFET – EZ-PD™ PAG2-PD **USB PD + DC-DC controllers:** – EZ-PD™ CCG7DC – EZ-PD™ CCG7SC – EZ-PD™ CCG7SCF **USB PD + AC-DC controller:** – EZ-PD™ PAG2	EZ-PD™ CCG3PA USB-C PD controller EZ-PD™ CCG7D dual-port USB-C PD + DC-DC controller + FETs EZ-PD™ CCG7S single-port USB-C PD + DC-DC controller + FETs	EZ-PD™ CCG2 USB-C port controller (active cable) EZ-PD™ CMG1 USB-C EMCA controller EZ-PD™ CMG2 USB-C EMCA controller with EPR (passive cable)	EZ-PD™ CCG3 USB-C PD port controller* EZ-PD™ CCG4 two-port USB-C and PD* EZ-PD™ CCG5 two-port USB-C PD* EZ-PD™ CCG5C one-port USB-C PD* EZ-USB™ HX3PD 10 Gbps hub controller with USB PD* EZ-PD™ PMG1-S3 EZ-PD™ CCG6_CFP dual-single port USB-C PD EZ-PD™ CCG8_CFP dual-single port USB-C PD	EZ-PD™ ACG1F dual-single port USB-C PD EZ-PD™ CCG5 two-port USB-C and PD* EZ-PD™ CCG5C one-port USB-C PD* EZ-PD™ CCG6DF dual-port USB-C PD* EZ-PD™ CCG6SF single-port USB-C PD* EZ-PD™ CCG8 dual-single port controller* EZ-PD™ CCG6_CFP dual-single port USB-C PD EZ-PD™ CCG8_CFP dual-single port USB-C PD	EZ-PD™ BCR EZ-PD™ PMG1

*We recommend using the newer parts for new designs

www.infineon.com/usb-c-pd

Part selector: EZ-PD™ CCGx vs PMG1

When selecting between EZ-PD™ PMG1 and EZ-PD™ CCGx devices, it is essential to consider the development environment and the specific requirements of your project. PMG1 devices are developed using the ModusToolbox™ IDE, while CCGx devices can be developed using either ModusToolbox™ or PSOC™ Creator.

PSOC™ Creator is a legacy, schematics-based Integrated Development Environment (IDE) primarily used for older CCGx devices. In contrast, ModusToolbox™ is a modern, cross-platform IDE that supports Linux, macOS, and Windows, and is compatible with multiple third-party IDEs. It offers a modular approach to project development and provides compliance with the latest USB Power Delivery specification, making it a preferred choice for new designs.

The table below compares PMG1 and CCGx devices based on USB-C power role, application, and software IDE. To determine which device to use, consider the following factors:

	USB-C application			
Power role	**Source only**		**DRP/SINK**	
Software tool	ModusToolbox™	PSOC™ Creator	ModusToolbox™	PSOC™ Creator
SPR (up to 100 W) with PD v3.2 support	EZ-PD™ CCG7D Family	EZ-PD™ CCG3PA	EZ-PD™ PMG1-S0	EZ-PD™ CCG5 (dual port)
	EZ-PD™ CCG7S Family		EZ-PD™ PMG1-S1	
			EZ-PD™ PMG1-S2	
			EZ-PD™ PMG1-B1 (battery charging)	
			EZ-PD™ PMG1-B2 (battery charging)	
EPR (up to 240 W) with PD v3.2 support	EZ-PD™ PAG2S		EZ-PD™ PMG1-S3 (single and dual port)	

Some additional notes:

- EPR up to 140 W is supported with integrated hardware blocks. 240 W EPR support requires additional external components
- EZ-PD™ CCG2, CCG3, and CCG4 devices that use PSOC™ Creator are not recommended for new designs requiring USB PD v3.2 firmware support

In summary

Use ModusToolbox™-based devices if:

- New design
- Requires EU Conformity or latest USB PD certification
- Needs updates to the latest USB PD specification
- Future design upgrades between device families

Use PSOC™ Creator-based CCGx devices only if:

- Already working with older CCGx devices
- No EU Conformity or latest USB PD certification required
- No plans for future USB PD specification updates

www.infineon.com/usb-c-pd

Moving to USB-C with EZ-PD™ family

A wide portfolio for your easy transition to the new universal connector

More and more products in consumer, industrial, and communications segments are adopting USB-C ports to source power. Infineon offers dedicated solutions to integrate USB-C ports into customers' embedded applications. Typical use cases include smart speakers, cameras, headphones, game consoles, power tools, VR headsets, and other portable electronics and home appliances. As the leader in USB-C end-to-end solutions, Infineon provides a comprehensive portfolio of solutions for USB-C chargers and power adapters.

System approach:

- Market-proven USB-C power delivery stack (USB-C PD)
- Complete and easy-to-use design portfolio to build robust, efficient, and cost-effective system solutions
- Robust evaluation kits for quick prototyping

The EZ-PD™ portfolio includes two different families of solutions to help you easily integrate USB-C into your embedded application: EZ-PD™ PMG1 (Power Delivery Microcontroller Gen 1) and EZ-PD™ BCR (Barrel Connector Replacement).

Are you looking for a plug-and-play solution to replace an old barrel connector or legacy USB connector with USB-C?

EZ-PD™ BCR

Or do you need additional control and want to add some extra functions for your device with a USB-C port controller + MCU in a single-chip solution?

EZ-PD™ PMG1

www.infineon.com/usb-c-pd



USB-C charging port controllers

EZ-PD™ BCR: Plug-and-play solution for USB-C adoption



EZ-PD™ BCR is a highly integrated pre-programmed USB Type-C charging port controller targeting all electronic devices with legacy barrel connectors up to 100 W or USB micro-B connectors. It easily adds USB-C power consumer capability to a device, allowing it to be powered by any USB-C power source, including USB-C chargers, power adapters, power banks, and in-wall or in-car charging ports.

EZ-PD™ BCR is compliant with the latest Type-C and USB PD 3.0 standards, allowing designers to quickly convert their devices' power input from a barrel connector to a USB-C connector without invasive changes to their existing designs. It contains a market-proven, fully automated USB Power Delivery policy manager that interoperates with virtually any USB-C power source. To safeguard against system-level fault conditions, EZ-PD™ BCR controllers integrate various protection circuitries, including V_{Bus}-to-CC short, overvoltage, overcurrent, and ESD.

No expert knowledge of the USB-C and Power Delivery standards or firmware development is required to develop a robust USB-C powered system with EZ-PD™ BCR.

Features and benefits

Key features

- Highly integrated one-chip solutions
- No firmware programming required
- Market-proven solution with mature design tools
- Availability of software utilities
- USB-IF compliant and certified
- No expert knowledge of USB-C or USB PD required
- Extended industrial temperature: -40°C to 105°C

Key benefits

- Area and BOM savings
- Shorter development cycle, faster time-to-market
- No implementation risk
- Configurability, product differentiation
- Pre-certified silicon to support USB logo certification
- No steep learning curve
- Suitable for virtually any commercial or industrial application

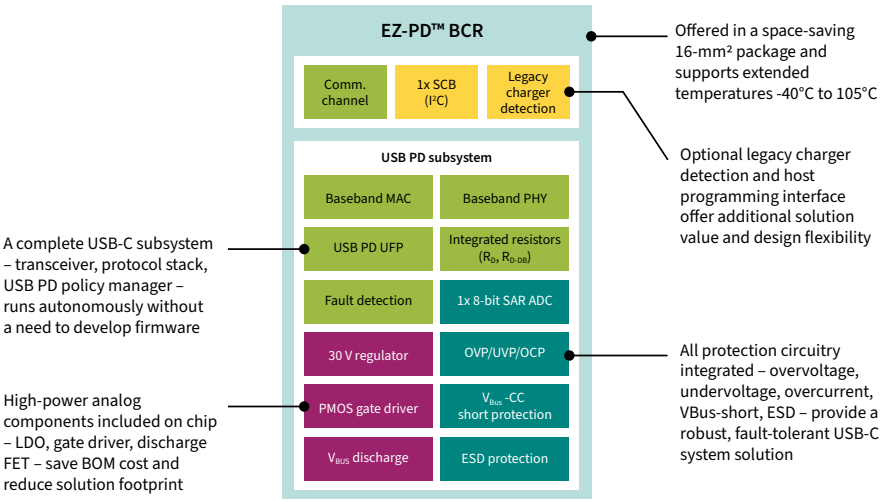

www.infineon.com/ez-pd-bcr

The wide portfolio offers different combinations of flash/RAM sizes and features to address all possible needs:

Features	EZ-PD™ BCR family		
Product name	EZ-PD™ BCR-Plus	EZ-PD™ BCR	EZ-PD™ BCR-Lite
Part number	CYPD3176-24LQXQ CYPD3176-24LQXQT	CYPD3177-24LQXQ CYPD3177-24LQXQT	CYPD3178-24LQXQ CYPD3178-24LQXQT
USB PD role	UFP (power sink)	UFP (power sink)	–
Programmable Power Supply (PPS)	✓	–	–
USB Type-C charging (5 V at 0.5 A, 0.9 A, 1.5 A, 3 A)	✓	✓	✓
Legacy charging support (BC 1.2 and others)	✓	–	✓
USB data compatible	✓	✓	✓
V_{Bus} gate driver	PFET	PFET	PFET
Supply voltage	3.0 V–24.5 V	3.0 V–24.5 V	3.0 V–24.5 V
V_{Bus} to CC short protection (20 V)	✓	✓	✓
OVP/UVP	✓	✓	✓
OCP	✓	–	–
ESD protection on CC, D+/D-, ±8 kV (contact), ±15 kV (air)	✓	✓	✓
I²C Interface	1	1	1
EZ-PD™ BCR HPI utility	✓	✓	✓
EZ-PD™ configuration utility	✓	–	–

Boards

Once the preferred characteristics are identified, it is possible to get started with the product of choice by utilizing the available evaluation kits: they provide a USB Type-C receptacle to consume power from a charger and then supply it over a terminal block. A barrel connector can be attached to this block using wires to convert a barrel input to USB-C. In addition, selective GPIOs and I²C interface are available on headers to easily control or monitor the BCR chip from an external microcontroller.

EZ-PD™ BCR-Lite EVK CY4535	EZ-PD™ BCR EVK CY4533	EZ-PD™ BCR-Plus EVK CY4534
	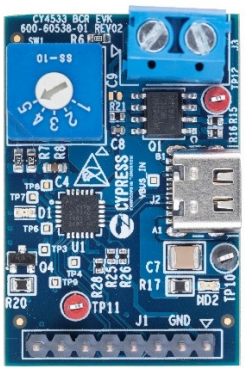	

www.infineon.com/ez-pd-bcr

USB-C high voltage microcontrollers

EZ-PD™ PMG1: The single-chip solution for moving to USB-C

Power Delivery microcontroller Gen 1 (EZ-PD™ PMG1) is a high-voltage USB-C Power Delivery Microcontroller (PD MCU) targeted to any embedded system that provides/consumes power to/from a high-voltage USB-C PD port and leverages the microcontroller to provide additional control capability.

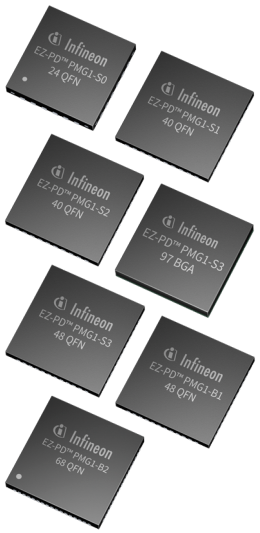

The EZ-PD™ PMG1 family of devices has a market-proven USB power delivery stack, ensuring spec compliance and interoperability. It is the only high-voltage, programmable USB power delivery solution on the market today, and comes with an integrated Arm® Cortex®-M0/M0+, up to 256 kB flash and 32 kB RAM, a USB full-speed device, and analog and digital peripherals. With an SDK supported in ModusToolbox™, the EZ-PD™ PMG1 family provides customers with a unified firmware view, facilitating seamless migration between all EZ-PD™ PMG1 devices.

The wide portfolio offers different combinations of flash/RAM sizes and features to address all possible needs:

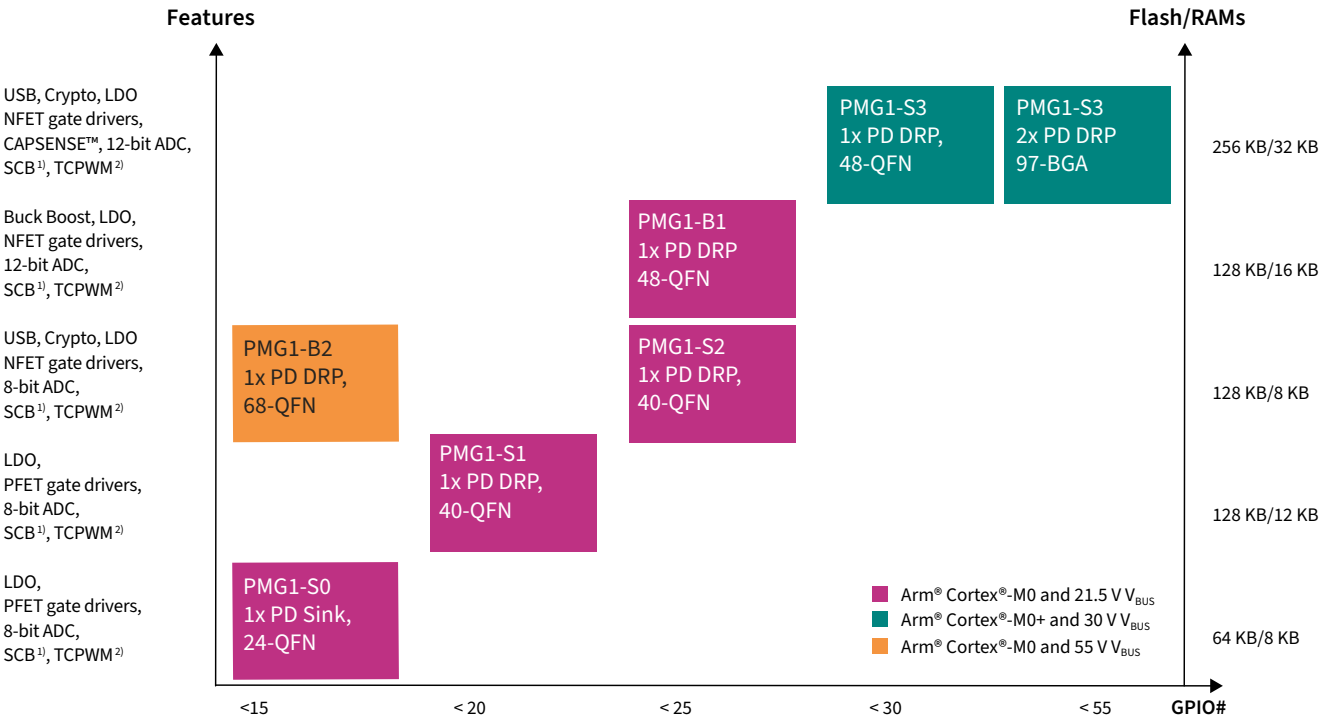

[1] SCB stands for Serial Communication Block
[2] TCPWM stands for Timer Counter Pulse Width Modulator

www.infineon.com/pmg1

Features and benefits

Key features

- Highly-integrated single-chip solution, including high voltage protection
- Configuration utility and wide support material available
- Market-proven solution with mature design tools
- Integrated flash/MCU
- USB-IF compliant and certified
- Extended industrial temperature: -40°C to 105°C

Key benefits

- Area and BOM savings
- Faster time-to-market
- No implementation risk
- Programmability, product differentiation
- Interoperability
- Suitable for virtually any commercial or industrial application

Block diagram

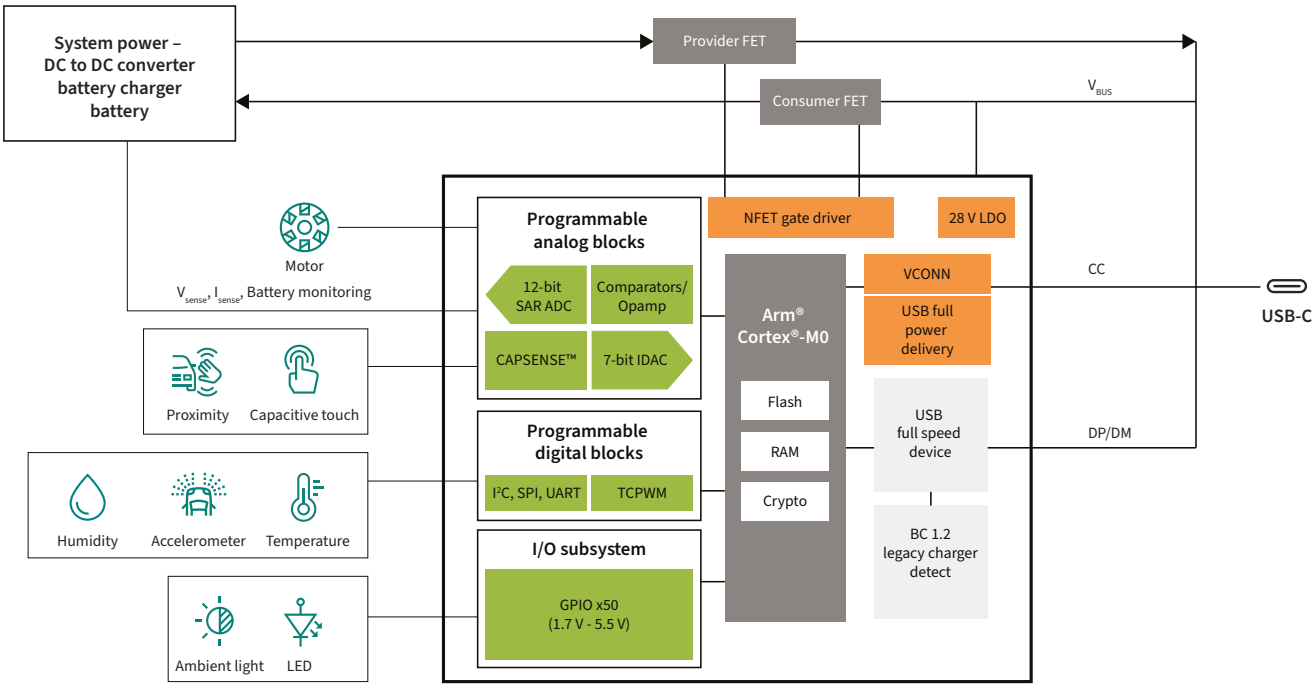

www.infineon.com/pmg1

Product portfolio

Part number	Product name	CPU	Flash [kB]	GPIOs	I/O Pins	Operating temperature range [°C]	Operating voltage min [V]	Operating voltage max [V]	Serial communication blocks	Termination resistor	Type-C ports
CYPM1011-24LQXI	PMG1-S0	Arm® Cortex®-M0	64	12	12	-40 to 85	2.7	5.5	2	Rd, Rd-db	1
CYPM1011-24LQXIT	PMG1-S0	Arm® Cortex®-M0	64	12	12	-40 to 85	2.7	5.5	2	Rd, Rd-db	1
CYPM1111-40LQXI	PMG1-S1	Arm® Cortex®-M0	128	17	17	-40 to 85	2.7	5.5	4	Rp,Rd, Rd-db	1
CYPM1111-40LQXIT	PMG1-S1	Arm® Cortex®-M0	128	17	17	-40 to 85	2.7	5.5	4	Rp,Rd, Rd-db	1
CYPM1115-48LQXI	PMG1-B1	Arm® Cortex® -M0	128	21	21	-40 to 105	4	24	3	Rp, Rd	1
CYPM1115-48LQXIT	PMG1-B1	Arm® Cortex® -M0	128	21	21	-40 to 105	4	24	3	Rp, Rd	1
CYPM1116-48LQXI	PMG1-B1	Arm® Cortex® -M0	128	21	21	-40 to 105	4	24	3	Rp, Rd, Rd-db	1
CYPM1116-48LQXIT	PMG1-B1	Arm® Cortex® -M0	128	21	21	-40 to 105	4	24	3	Rp, Rd, Rd-db	1
CYPM1216-68LQXI	PMG1-B2	Arm® Cortex® -M0	128	8	9	-40 to 105	4.5	60	2	Rp, Rd, Rd-db	1
CYPM1216-68LQXIT	PMG1-B2	Arm® Cortex® -M0	128	8	9	-40 to 105	4.5	60	2	Rp, Rd, Rd-db	1
CYPM1211-40LQXI	PMG1-S2	Arm® Cortex®-M0	128	20	20	-40 to 85	2.7	5.5	4	Rp,Rd, Rd-db	1
CYPM1211-40LQXIT	PMG1-S2	Arm® Cortex®-M0	128	20	20	-40 to 85	2.7	5.5	4	Rp,Rd, Rd-db	1
CYPM1211-42FNXI	PMG1-S2	Arm® Cortex®-M0	128	20	20	-40 to 85	2.7	5.5	4	Rp, Rd	1
CYPM1211-42FNXIT	PMG1-S2	Arm® Cortex®-M0	128	20	20	-40 to 85	2.7	5.5	4	Rp, Rd	1
CYPM1311-48LDXI	PMG1-S3	Arm® Cortex®-M0+	256	26	26	-40 to 85	2.7	5.5	7	Rp,Rd, Rd-db	1
CYPM1311-48LDXIT	PMG1-S3	Arm® Cortex®-M0+	256	26	26	-40 to 85	2.7	5.5	7	Rp,Rd, Rd-db	1
CYPM1321-97BZXI	PMG1-S3	Arm® Cortex® -M0+	256	50	50	-40 to 85	4	30	8	Rp, Rd, Rd-db	2
CYPM1321-97BZXIT	PMG1-S3	Arm® Cortex® -M0+	256	50	50	-40 to 85	4	30	8	Rp, Rd, Rd-db	2
CYPM1322-97BZXI	PMG1-S3	Arm® Cortex®-M0+	256	50	50	-40 to 85	2.7	5.5	8	Rp,Rd, Rd-db	2
CYPM1322-97BZXIT	PMG1-S3	Arm® Cortex®-M0+	256	50	50	-40 to 85	2.7	5.5	8	Rp,Rd, Rd-db	2

www.infineon.com/pmg1

Boards

Once the preferred characteristics are identified, it is possible to start with the product of choice using the available evaluation kits: they provide a USB Type-C receptacle to consume power from a charger and then supply it over a terminal block. A barrel connector can be attached to this block using wires to convert a barrel input to USB-C. In addition, all the GPIOs and serial interfaces (UART, I^2C, SPI) are available on connectors, making integrating external sensors and testing the microcontroller's functions easy.

EZ-PD™ PMG1-S0 CY7110 EVK	EZ-PD™ PMG1-S1 CY7111 EVK	EZ-PD™ PMG1-S2 CY7112 EVK	EZ-PD™ PMG1-S3 CY7113 EVK
			

EZ-PD™ PMG1-B1 EVAL_PMG1_B1_DRP	EZ-PD™ PMG1-B2 REF_PMG1_B2_DRP	EZ-PD™ PMG1-S1 EVAL_PMG1_S1_DRP	EZ-PD™ PMG1-S3 EVAL_PMG1_S3_DUALDRP
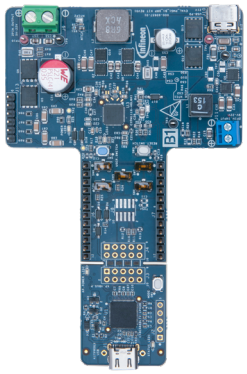	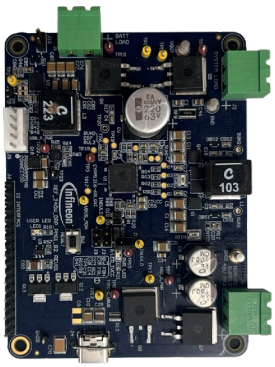	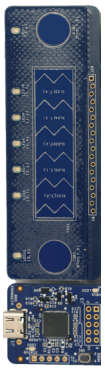	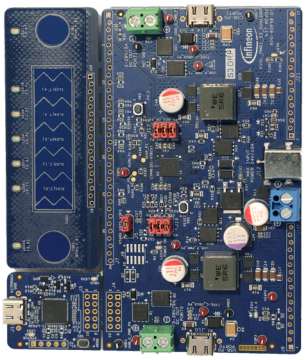

www.infineon.com/pmg1

EZ-PD™ CCG8 and CCG8 CFP USB-C PD controllers

USB-C power delivery solution for PC host with EPR

EZ-PD™ CCG8 and CCG8-CFP are the industry's first dual/single-port USB Type-C controller compliant with the latest USB-C and Power Delivery (PD) specifications, offering a complete USB-C and PD port control solution for PCs and notebooks. They integrate a discrete N-channel Field Effect Transistor (NFET) gate driver with fault protection and slew rate, a 32-bit 48 MHz Arm® Cortex®-M0 Plus processor, and a complete Type-C transceiver including termination resistors Rp, Rd, and dead battery Rd. While EZ-PD™ CCG8D (dual port) is available in a 97-BGA package, EZ-PD™ CCG8S (single port) is only available in a 48-pin QFN package. EZ-PD™ CCG8-CFP is also available in single and dual port, both in a common footprint (52-lead QFN). Both products can be requested in tray or tape and reel packing options and support an Extended Power Range (EPR) up to 28 V without needing external components.

Features and benefits

Key features

- USB-C and PD 3.1 with EPR up to 28 V supporting USB3 and USB4, Thunderbolt, and DisplayPort alternate mode platforms
- 32-bit, 48 MHz Arm® Cortex®-M0+ processor
- Integrates a complete Type-C transceiver and a load switch controller for driving NFETs on V_{Bus} provider path
- Slew-rate controller to turn on the V_{Bus} provider path
- Configurable hardware-controlled V_{Bus} overvoltage, undervoltage, overcurrent, short circuit, reverse current protection, and thermal shutdown
- Integrated 3:1 SBU Muxes for alternate modes and closed chassis debug
- Integrated digital and analog blocks

Key benefits

- Reduced area and BOM thanks to the high degree of integration
- Ideal for EPR-based DRP solutions
- Programmable solution which allows the implementation of custom features
- Available in both Common Footprint (CFP) and not for extra GPIOs and features



www.infineon.com/usb-c-pd

Desktop Notebook

Block diagram

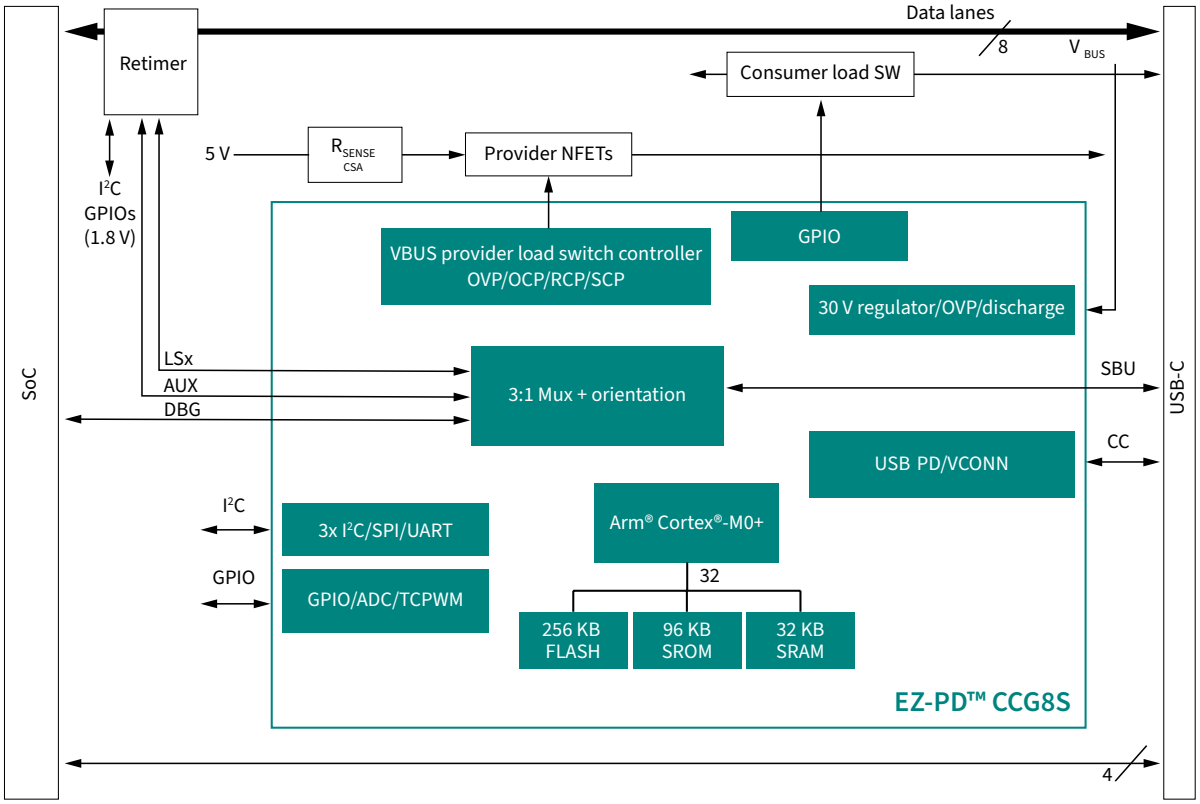

Product portfolio

Part number	Product name	Processor type	Flash [kB]	Type-C ports	USB standard	Operating temperature range [°C]	Operating voltage min [V]	Operating voltage max [V]	Protection features (OVP, OCP, SCP and ESD)	Package type
CYPD8125-48LDXI	EZ-PD™ CCG8	Arm® Cortex® M0+	256	1	USB PD 3.1	-40 to 85	2.8	30	N	48-pin QFN
CYPD8125-48LDXIT	EZ-PD™ CCG8	Arm® Cortex® M0+	256	1	USB PD 3.1	-40 to 85	2.8	30	N	48-pin QFN
CYPD8225-97BZXI	EZ-PD™ CCG8	Arm® Cortex® M0+	256	2	USB PD 3.1	-40 to 85	2.8	30	N	97-ball BGA
CYPD8225-97BZXIT	EZ-PD™ CCG8	Arm® Cortex® M0+	256	2	USB PD 3.1	-40 to 85	2.8	30	N	97-ball BGA
CYPD8129-52LQXIT	EZ-PD™ CCG8 CFP	Arm® Cortex® M0+	256	1	USB PD 3.2	-40 to 70	4	28	Y	52-lead QFN
CYPD8129-52LQXI	EZ-PD™ CCG8 CFP	Arm® Cortex® M0+	256	1	USB PD 3.2	-40 to 70	4	28	Y	52-lead QFN
CYPD8229-52LQXIT	EZ-PD™ CCG8 CFP	Arm® Cortex® M0+	256	2	USB PD 3.2	-40 to 70	4	28	Y	52-lead QFN
CYPD8229-52LQXI	EZ-PD™ CCG8 CFP	Arm® Cortex® M0+	256	2	USB PD 3.2	-40 to 70	4	28	Y	52-lead QFN

www.infineon.com/usb-c-pd

Desktop Notebook

EZ-PD™ CMG2: USB-C EMCA controller

EMCA controller with V_{Bus} to CC short protection for passive USB-C cables

EZ-PD™ CMG2 CYPD2803A1 is Infineon's dedicated Electronically Marked Cable Assembly (EMCA) controller targeting passive non-Thunderbolt and Thunderbolt Type-C cables. It offers integrated V_{Bus}-CC short protection up to 54 V, V_{Bus}-VCONN short protection up to 54 V, Power Delivery 3.1, Type-C 2.1, and ESD protection in a compact 9-ball WLCSP package. EZ-PD™ CMG2 has a 47-byte storage space for vendor- and cable-specific configuration data and is designed to operate from a 2.7 to 5.5 V VCONN supply range.

Features and benefits

Key features

- Supports USB PD 3.1 specification and USB Type-C specification version 2.1
- Supports USB4, TBT4, and Extended Power Range (EPR)
- PD protocol
- Integrated high-voltage protection on CC, VCONN1, and VCONN2 pins to protect against accidental shorts to the V_{Bus} pin on the Type-C connector up to 54 V
- Integrated 47 bytes for storing vendor- and cable-specific configuration data termination resistor RA on VCONN1 and VCONN2
- IEC ESD protection on VCONN and CC
- Package: 9-ball WLCSP

Key benefits

- No programming required
- Easy to use, faster design cycle
- Robust solution with short protection up to 54 V

www.infineon.com/ez-pd-cmg2

Block diagram

Passive EMCA application: Single EZ-PD™ CMG2 chip per plug:

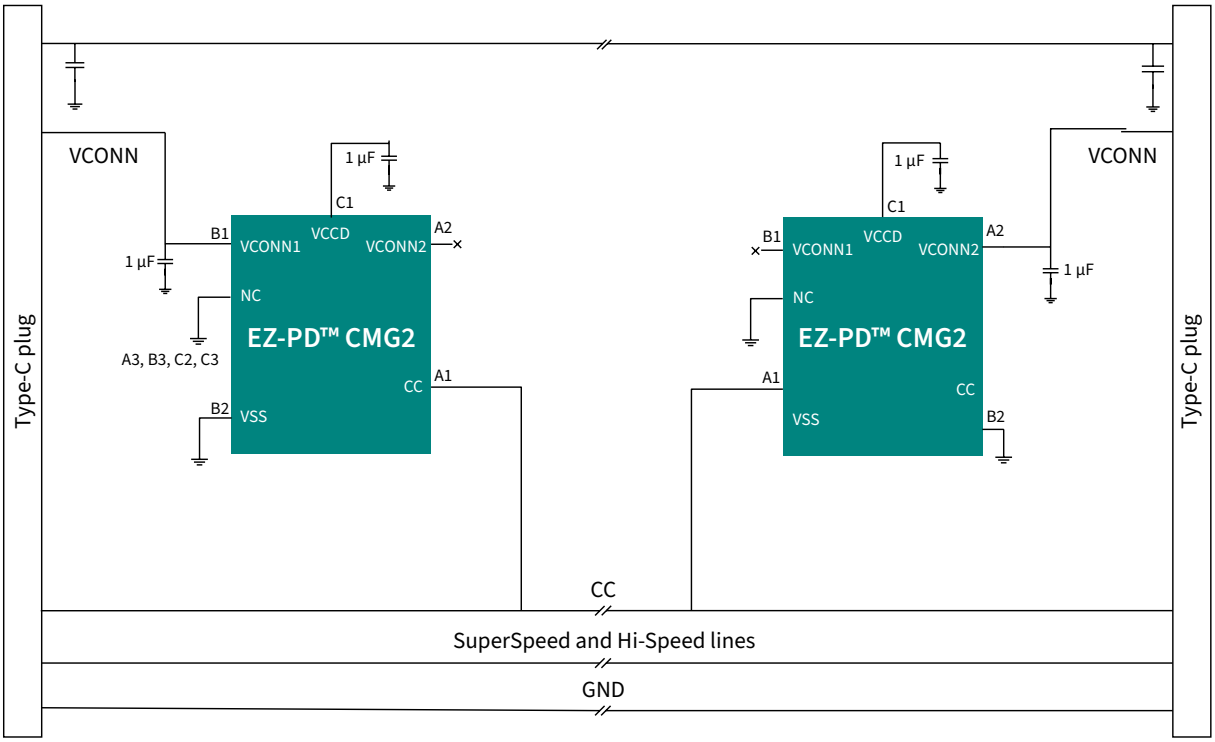

Block diagram

Passive EMCA application: Single EZ-PD™ CMG2 chip per cable:

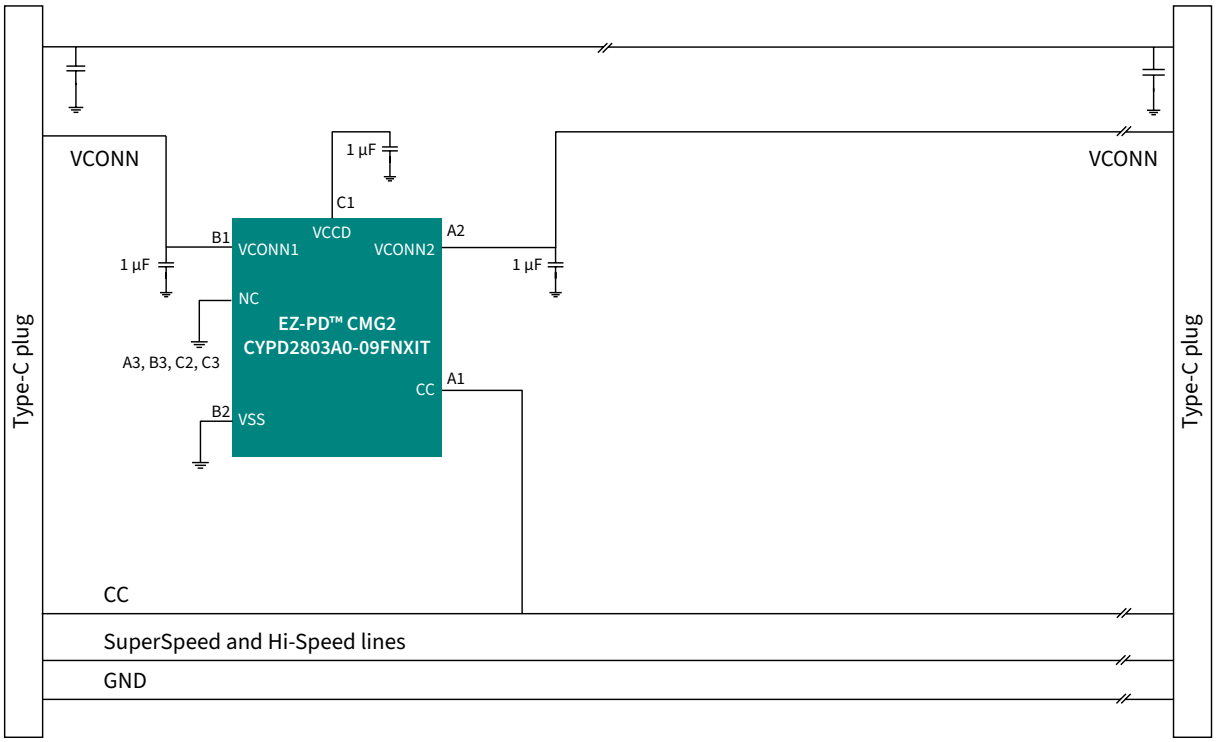

www.infineon.com/ez-pd-cmg2

EZ-PD™ PAG2: USB-C PD and DC-DC controller

ZVS flyback converter chipset with integrated USB PD, Synchronous Rectification (SR), and PWM

EZ-PD™ PAG2 is a complete AC-DC charger and adapter solution with integrated USB PD. It is a two-chip secondary-side controlled flyback converter chipset (EZ-PD™ PAG2P and EZ-PD™ PAG2S) with integrated USB PD, synchronous rectifier (SR), and PWM controllers. EZ-PD™ PAG2 supports quasi-resonance flyback with zero voltage switching (QR-ZVS) and Active Clamp Flyback (ACF). Its design supports PD 3.1 SPR and 28 V EPR. EZ-PD™ PAG2S standalone can pair with PWM controllers through an optocoupler by acting as USB PD and SR.

EZ-PD™ PAG2P



EZ-PD™ PAG2P is a primary start-up controller designed to receive PWM signals from EZ-PD™ PAG2S, which performs the PWM regulation. It provides HV start-up, PET receiver via CYPET121, boosts V_{CC}, low-side NFET gate driver, and high-side logical driver. EZ-PD™ PAG2P supports both X-cap discharge and non-X-cap discharge modes. It pairs with EZ-PD™ PAG2S-AC to support ACF converters and EZ-PD™ PAG2S-QZ to support QR-ZVS flyback converters.

EZ-PD™ PAG2S



EZ-PD™ PAG2S supports secondary-side controlled flyback converters by pairing with EZ-PD™ PAG2P. PAG2S-AC is a secondary-side ACF controller enabling leakage energy recycling and ZVS operation. PAG2S-QZ is a secondary-side QR-ZVS controller achieving ZVS using an SR control scheme. EZ-PD™ PAG2S-PS standalone acts as a USB PD and SR-integrated secondary-side controller by pairing with third-party primary-side PWM controllers via an optocoupler.

Features and benefits

Key features

- Integrated high-voltage start-up
- Integrated low-side gate driver
- Integrated high-side logical driver
- Integrated V_{CC} boost switch
- Supports x-cap discharge mode
- Brown-in/out and line OVP/UVP
- Supports OCP and SCP
- Startup secondary V_{Bus} OVP
- Programmable soft-start
- Integrated PET receiver

Key benefits

- Supports PD 3.1 SPR and 28 V EPR
- 20-300 kHz switching frequency
- Supports DCM, CCM, and CrCM
- Support PSR and SSR PWM regulation
- BC1.2, QC5, Apple 2.4 A, and AFC
- Supports V_{Bus} fault protection
- Supports V_{conn} current limit
- Supports V_{Bus}-CC short
- Short SR turn-ON and -OFF delay
- Supports non-logical level MOSFETs

www.infineon.com/pag2

Notebook Communication Charger

Block diagram

EZ-PD™ PAG2-QZ chipset: Secondary-side controlled QR-ZVS

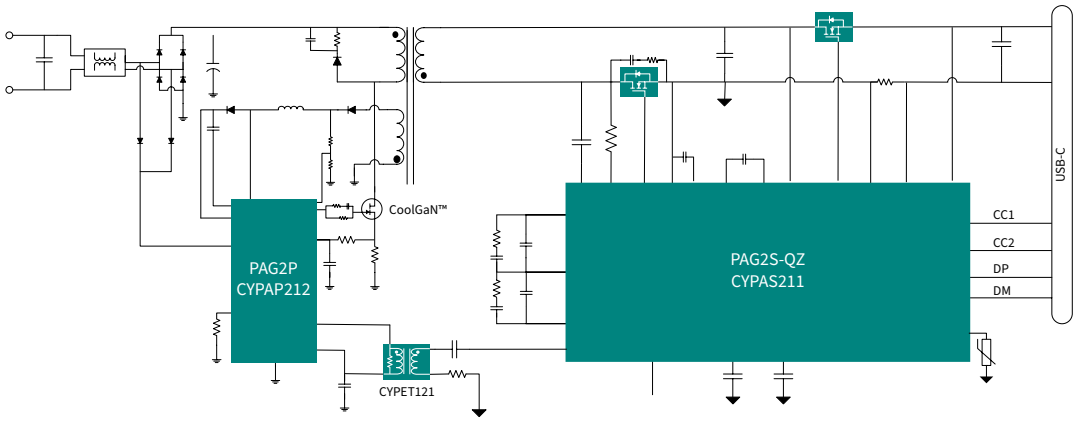

Block diagram

EZ-PD™ PAG2-AC chipset: Secondary-side controlled ACF

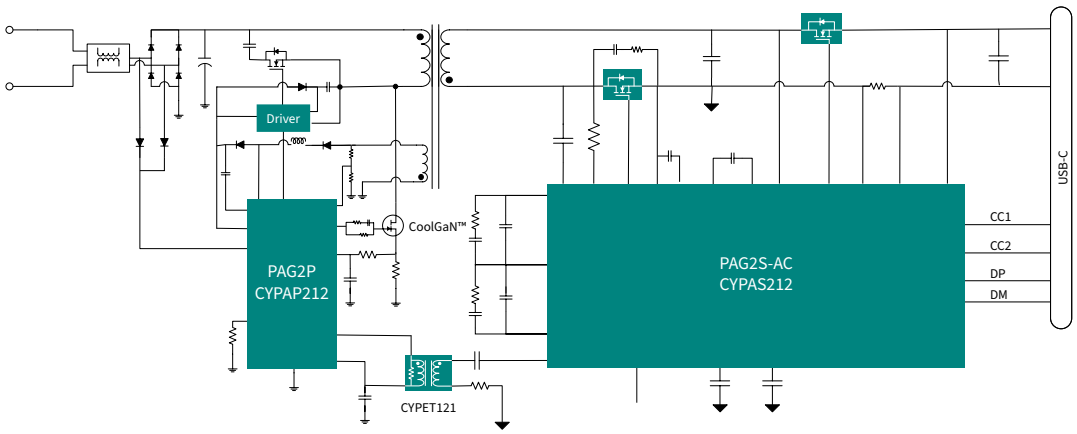

Comparison table: EZ-PD™ PAG2 QR-ZVS vs PAG2 ACF

Feature		EZ-PD™ PAG2 QR-ZVS	EZ-PD™ PAG2 ACF
USB PD, subsystem and peripheral	Arm® Cortex®-M0 USB PD MCU, Memory (Flash/SRAM)	Yes, 64 KB/8 KB	Yes, 64 KB/8 KB
	PD compliance spec	PD 3.1 SPR with PPS/28 V EPR	PD 3.1 SPR with PPS/28 V EPR
	VCONN switches and LDO	Yes	Yes
LP-SMPS features	Switching frequency range	20-300 kHz	20-300 kHz
	Zero Voltage Switching (ZVS)	Yes, any valley through SR turn on/off	Yes, through ACF operation
	Recycle leakage energy	No	Yes
	Primary side protection	– Brown in/out, line UV/OP – Secondary start-up V_{Bus} OVP – OCP (dual level), SCP	– Brown in/out, line UV/OP – Secondary start-up V_{Bus} OVP – OCP (dual level), SCP
	Primary VCC supply	– Integrated V_{CC} bost switch – Without external LDO circuit	– Integrated VCC boost switch – Without external LDO circuit
	Secondary side protection	– V_{Bus} OVP, UVP, OCP, SCP – Rsense short protection – CC1/CC2/DP/DM OVP	– V_{Bus} OVP, UVP, OCP, SCP – Rsense short protection – CC1/CC2/DP/DM OVP
	Digital control feature	– Digital valley table – Deadtime and ZVS pulse width	– Digital valley table – Deadtime and ACF pulse width
	Efficiency compliant standard	Standby <30 mW; DoE VI; CoC tier 2; EuP Lot6	Standby <30 mW; DoE VI; CoC tier 2; EuP Lot6
Others	Packaging	PAG2S: 32-QFN/PAG2P: 14-SOIC	PAG2S: 32-QFN/PAG2P: 14-SOIC

www.infineon.com/pag2

EZ-PD™ CCG7SC, CCG7SCF, and CCG7DC

Single- and dual-port USB-C PD and DC-DC controller USB-C charging solutions, with or without FETs, for consumer applications

Infineon's EZ-PD™ CCG7x consumer are highly integrated single- and dual-port USB Type-C power delivery (PD) solutions with built-in buck-boost controllers; they are designed for multi-port consumer charging applications and comply with the most recent USB Type-C and PD specifications. With an on-chip 32-bit Arm® Cortex®-M0 processor, 128 kB flash, 16 kB RAM, and 32 kB ROM, EZ-PD™ CCG7x is the most programmable USB PD solution for DC-DC applications, leaving the flash available for user application's use. Custom system management features, like dynamic load sharing and temperature monitoring, are part of the feature set thanks to the inclusion of this fully programmable MCU with analog and digital peripherals. EZ-PD™ CCG7x also integrates gate drivers for V_{Bus} NFET on the provider path and hardware-controlled protection features on the Vbus. The high degree of integration lowers the system BOM and provides a footprint-optimized solution to support higher power-density designs.

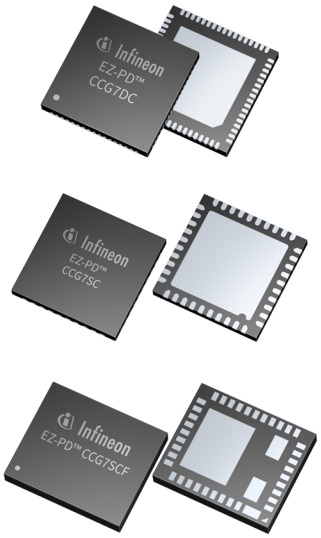

Features and benefits

Key features

- One/two USB-C PD controllers + DC-DC controllers
- Supports the latest USB-C PD 3.1 with PPS, QC4+, Samsung AFC, Apple 2.4 A, BCv1.2
- Arm® Cortex®-M0 with flash for custom features implementation
- Integrated V_{Bus} NFET gate drivers, buck-boost NFET gate drivers, VCONN FETs and high-side current sense amplifier (HSCSA)
- DC-DC controller: Configurable switching frequency of 150 – 600 kHZ, PSM/FCCM mode of operation, wide input voltage range of 4 – 24 V (40 V tolerant), and programmable spread spectrum frequency for low EMI
- Protection features: OVP, UVP, SCP, OCP, OTP, and V_{Bus}-CC short
- Advanced features: Dynamic load sharing, power throttling, field firmware upgrade, optimized-efficiency control methods for flyback converter, and buck-bypass

Key benefits

- Enables high power density designs
- Dynamic load sharing enables intelligent redistribution of power among ports
- Capable of supporting 2-port, 3-port, 4-port, or more configurations
- Does not require additional MCU externally for system peripheral

www.infineon.com/ccg7x

USB PD charger | Adapter | Consumer | Smartphone charger

Block diagram

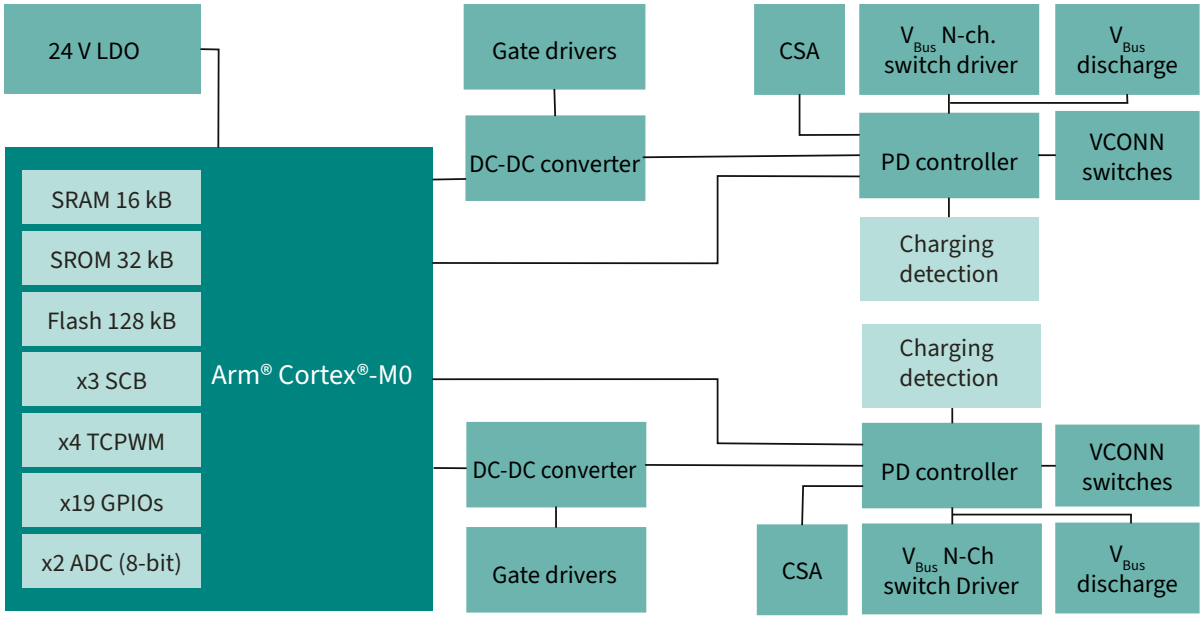

Application example

Two-port USB-C charger using EZ-PD™ CCG7DC

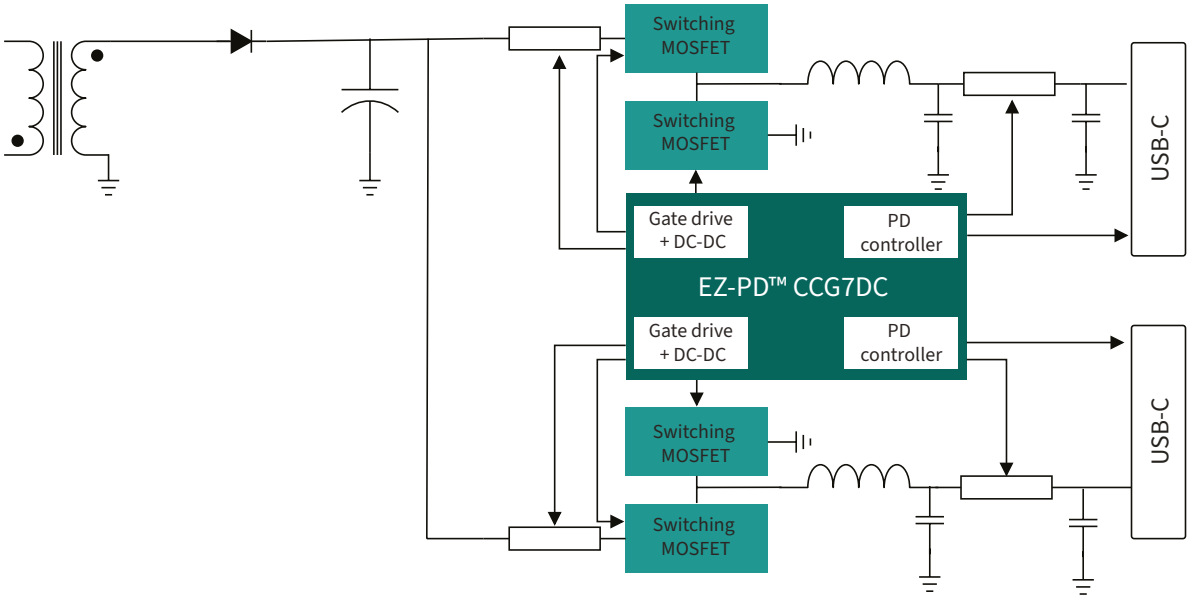

www.infineon.com/ccg7x

Product portfolio

Part number	Product name	Type-C ports	USB standard	Operating temperature range [°C]	Operating voltage min [V]	Operating voltage max [V]	Package type
CYPD7171-40LQXQ/T	EZ-PD™ CCG7SC	1	USB PD 3.1	-40 to 125	5 V	24 V	40-pin QFN
CYPD7172-39BFXQ/T	EZ-PD™ CCG7SCF	1	USB PD 3.2	-40 to 105	5 V	24 V	39-pin LGA
CYPD7173-39BFXQ/T	EZ-PD™ CCG7SCF	1	USB PD 3.2	-40 to 105	5 V	24 V	39-pin LGA
CYPD7271-68LQXQ/T	EZ-PD™ CCG7DC	2	USB PD 3.2	-40 to 105	4 V	24 V	68-pin QFN
CYPD7272-68LQXQ/T	EZ-PD™ CCG7DC	2	USB PD 3.2	-40 to 105	4 V	24 V	68-pin QFN

Boards

REF_CCG7SC_120W_3C	REF_CCG7DC_120W_2C	REF_CCG7SCF_120W_3C
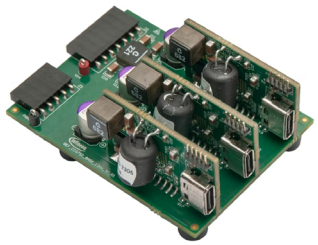	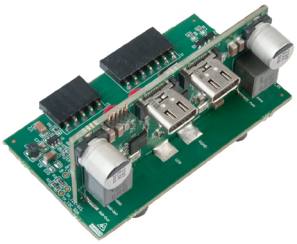	

www.infineon.com/ccg7x

EZ-PD™ CCG7S: Automotive single-port USB-C PD controller

Single-port USB-C power delivery solution with a DC-DC controller + FETs

EZ-PD™ CCG7S family offers a single-port USB-C Power Delivery (PD) solution with a buck-boost controller and the option of integrated MOSFETs. It complies with the latest USB Type-C and PD specifications and is targeted at applications such as head unit chargers, rear seat chargers, and rear seat entertainment systems. The integrations reduce the BOM and provide an optimized footprint for solutions of up to 100 W of power output.

Features and benefits

Key features

- Supports USB PD 3.2 AVS and PPS
- Integrated programmable MCU
- 128 KB flash, 16 KB SRAM, 32 KB ROM
- 100 mW V_{CONN}
- OVP, OCP, UVP, V_{BUS}-to-CC, UVLO
- 1 legacy/proprietary charging block
- 1x Buck-boost controller
- Optional of 2/4 switching MOSFETs
- Thermal power throttling

Key benefits

- Reduced BOM
- Reduced design cycle
- SDK for configurable value-added features
- Advanced protection for vehicles and devices
- Programmable Power Supply (PPS)
- Optimized for infotainment and charging hubs
- Granular output power throttling based on V_{BATT} and module temperature
- Authenticated field firmware upgradability

Block diagram

EZ-PD™ CCG7S: single-port USB Type-C PD and buck-boost controller

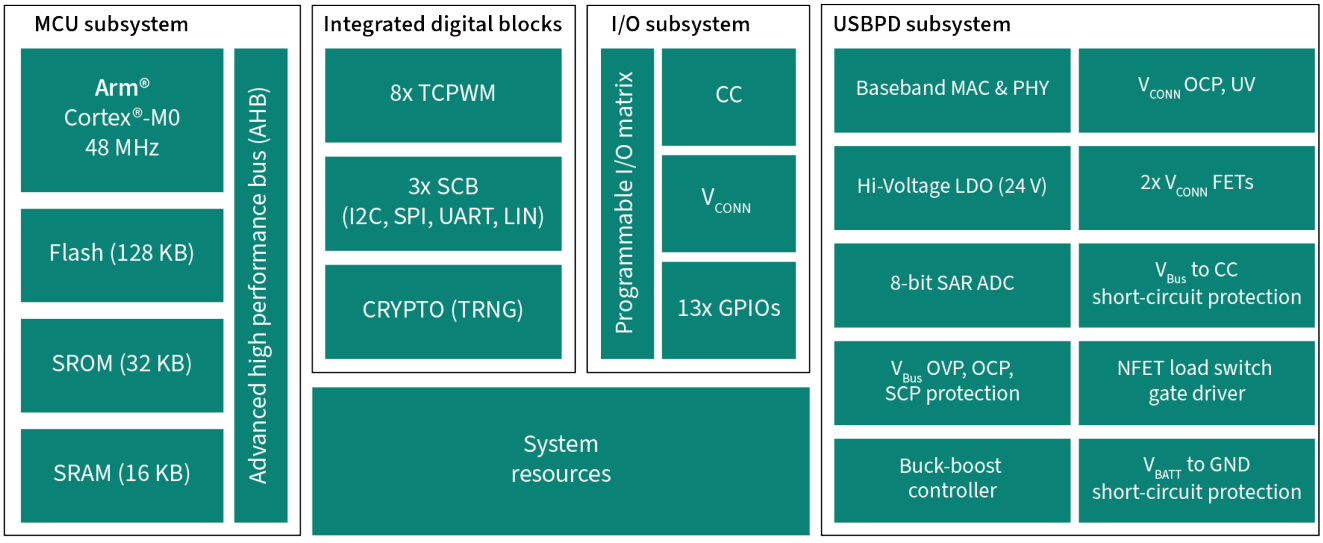

www.infineon.com/ez-pd-ccg7s

Product portfolio

Part number	Product name	Processor type	Flash [kB]	USB standard	with FETs	Operating temperature range [°C]	Operating voltage min [V]	Operating voltage max [V]
CYPD7191-40LDXS/T	EZ-PD™ CCG7S	ARM® Cortex®-M0	128	USB PD 3.2	N	-40 to 105	4 V	24 V
CYPD7192-39BFXS/T	EZ-PD™ CCG7SAF	ARM® Cortex®-M0	128	USB PD 3.2	Y	-40 to 105	4 V	24 V
CYPD7193-39BFXS/T	EZ-PD™ CCG7SAF	ARM® Cortex®-M0	128	USB PD 3.2	Y	-40 to 105	4 V	24 V
CYPD7194-40BFXS/T	EZ-PD™ CCG7S	ARM® Cortex®-M0	128	USB PD 3.2	Y	-40 to 105	4 V	24 V
CYPD7195-40BFXS/T	EZ-PD™ CCG7S	ARM® Cortex®-M0	128	USB PD 3.2	Y	-40 to 105	4 V	24 V
CYPD7196-40BFXS/T	EZ-PD™ CCG7S	ARM® Cortex®-M0	128	USB PD 3.2	Y	-40 to 105	4 V	24 V
CYPD7197-40BFXS/T	EZ-PD™ CCG7S	ARM® Cortex®-M0	128	USB PD 3.2	Y	-40 to 105	4 V	24 V
CYPD7198-39BFXS/T	EZ-PD™ CCG7SAF	ARM® Cortex®-M0	128	USB PD 3.2	Y	-40 to 105	4 V	24 V
CYPD7199-40LDXS/T	EZ-PD™ CCG7S	ARM® Cortex®-M0	128	USB PD 3.2	N	-40 to 105	4 V	24 V

Boards

REF_CCG7SA4F_65W_RSC	REF_CCG7S_60W	REF_CCG7SAF_45W_RSC
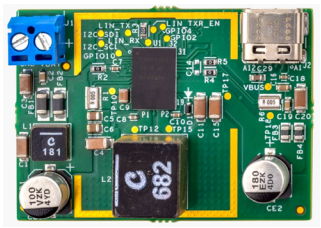	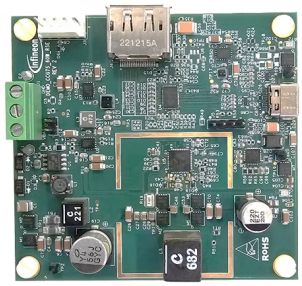	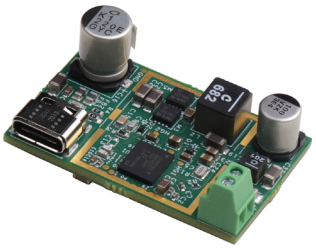

www.infineon.com/ez-pd-ccg7s

EZ-PD™ CCG7D: Automotive dual-port USB-C PD controller

Dual-port USB-C power delivery solution with buck-boost controller

EZ-PD™ CCG7D is a dual-port USB-C Power Delivery (PD) solution with integrated buck-boost controller. It complies with the latest USB Type-C and PD specifications and is targeted for automotive charger applications such as head-unit chargers, rear-seat chargers, and rear-seat entertainment systems. Its high degree of integration reduces BOM and provides an optimized footprint for solutions of up to 100 W of power output per port.

Features and benefits

Key features

- Supports USB PD 3.1 and PPS mode
- Configurable resistors Rp and Rd
- V_{BUS} provider NFET gate driver
- 100 mW V_{CONN} power supply & control
- 2x Buck-boost controllers
- 2 legacy/proprietary charging blocks
- Supports QC, 2.4 A, AFC, BC 1.2
- OVP, OCP, UVP, V_{BUS}-to-CC, UVLO
- 32-bit MCU 48 MHz Arm® Cortex®-M0
- 128 KB flash, 16 KB SRAM, 32 KB ROM

Key benefits

- Reduced BOM
- Reduced design cycle
- SDK for configurable value-added features
- Programmable Power Supply (PPS)
- Dynamic load sharing to distribute power between ports
- Granular output-power throttling based on V_{BATT} and module temperature
- Black box to store critical Type-C port parameters
- Alternate mode support for rear seat entertainment systems
- Authenticated field firmware upgradability

Block diagram

EZ-PD™ CCG7D: dual-port USB Type-C PD and buck-boost controller

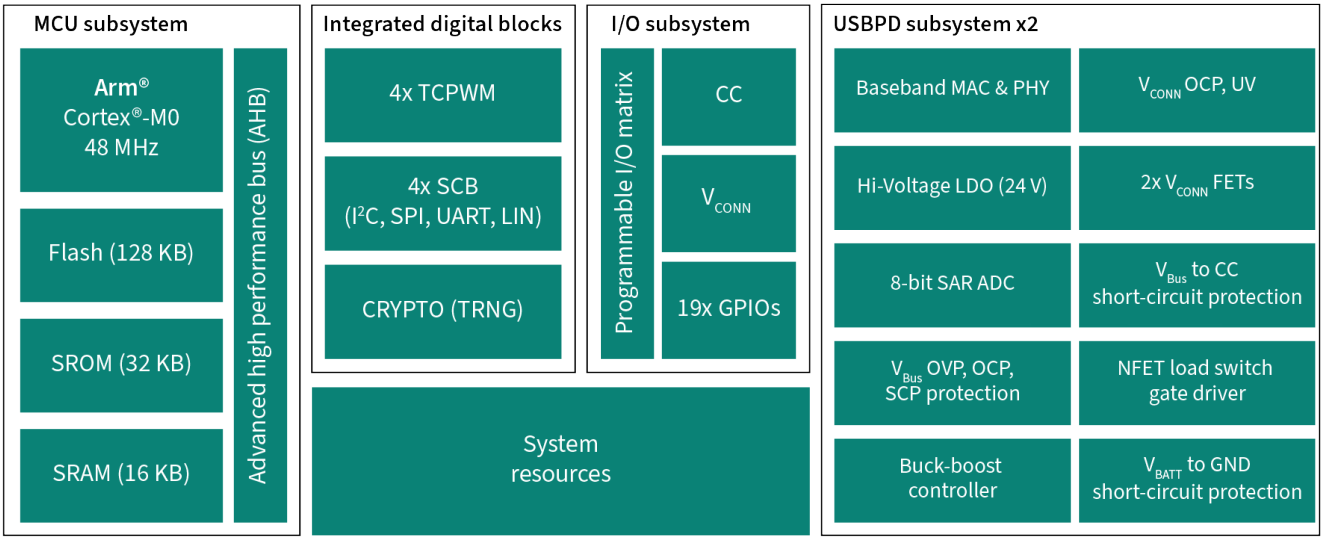

www.infineon.com/ez-pd-ccg7d

Product portfolio

Part number	Product name	Processor type	Flash [kB]	USB standard	With FETs	Operating temperature range [°C]	Operating voltage min [V]	Operating voltage max [V]
CYPD7291-68LDXS/T	EZ-PD™ CCG7D	ARM® Cortex®-M0	128	USB PD 3.2	-40 to 105	4 V	24 V	24 V
CYPD7299-68LDXS/T	EZ-PD™ CCG7D	ARM® Cortex®-M0	128	USB PD 3.2	-40 to 105	4 V	24 V	24 V

Board

EZ-PD™ CCG7D REF_CCG7D_120W

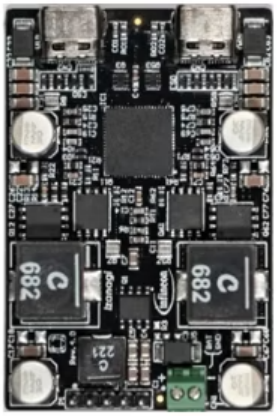

www.infineon.com/ez-pd-ccg7d

Peripheral controllers for USB 3.2

EZ-USB™ FX5, FX5N, FX10, and FX20

For over a decade, EZ-USB™ FX3 was the gold-standard building block for providing USB 5 Gbps connectivity to machine vision cameras, spectrum analyzers, and many high-bandwidth data acquisition systems. With the growing digitalization of the real world driven by AI, the demand for databases and higher-speed interfaces has been rocketing across all industries. After tens of millions of dollars invested in its development, Infineon has now introduced the next generation of general-purpose USB peripheral controllers, namely EZ-USB™, FX5, FX5N, FX10 and FX20, with up to 600 % higher performance, an optimized PCB area and BOM cost, and extensive support (firmware, DVK, documentation) to facilitate quick development and a shorter time to market.

			SUPERSPEED USB 5Gbps	SUPERSPEED USB 10Gbps	SUPERSPEED USB 10Gbps	SUPERSPEED USB 20Gbps
Features	**CX3**	**FX3**	**FX5**	**FX5N**	**FX10**	**FX20**
USB bus speed	USB 5Gbps			USB 10Gbps		USB 20Gbps
High-bandwidth data interface	MIPI CSI-2	32-bit LVCMOS	32-bit LVCMOS / 16-lane LVDS			
Maximum data throughput	2.4 Gbps	3.2 Gbps	3.7 Gbps	7.4 Gbps	8.8 Gbps	17.6 Gbps
USB spec	USB 3.2 Gen 1			USB 3.2 Gen 1x2	USB 3.2 Gen 2	USB 3.2 Gen 2x2
Max. passive cable length	5 m		10 m		5 m	
Eye monitor	–		✓			
Processor	ARM® 9		ARM® Cortex® M4F/M0+			
Flash	512 KB		512 KB			
SRAM			128 KB + 1024 KB			
USB type-C support	–		Yes			
Security (crypto engine)	–		Yes			
Peripheral I/O	1x SPI/I²C/UART		7x Serial Communication Block (I²C/SPI/UART/CAN), 2x QSPI, 2x I2S			
Package	121-BGA (10 x 10 mm)		169-BGA (10 x 10 mm, 0.75 mm pitch)			

Features and benefits

Key features

- USB 5 Gbps, 10 Gbps, and 20 Gbps peripheral controllers
- Dual-core ARM® Cortex® -M4F/M0+ CPU
- Integrated Flash and SRAM with 1024 KB buffer memory
- 32-bit LVCMOS interface at 160 MHz DDR
- Cryptography accelerator
- Up to 10 m passive USB cable support

www.infineon.com/superspeed

Key benefits

- Up to 600% performance improvement vs. previous generation
- Smaller PCS footprint and optimized BOM cost:
  - 10 x 10 mm BGA package
  - USB-C direct connection without high-speed signal mux
- Quick-start development:
  - Firmware jumpstart with configuration tool
  - USB Vision Class, UVC, USB 3Vision firmware ready
  - DVK with standard FMC for quick connection to FPGA boards
  - Wide documentation support for both hardware and software

Block diagram

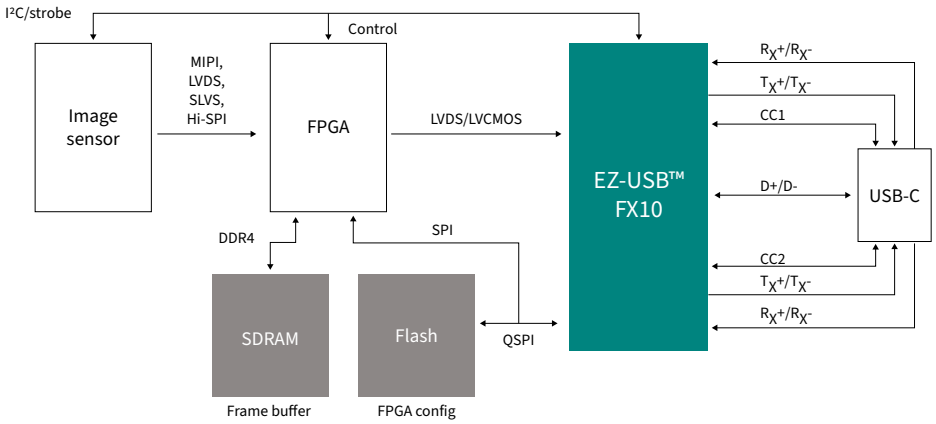

On the left is an example of building blocks for a machine vision camera. EZ-USB™ FX10 provides a USB 10 Gbps interface (USB enumeration, USB 3Vision header/trailer insertion, data transfer). The USB connector is used for both data and power. The image sensor acquires the raw data, while the FPGA pre-processes the image.

Product portfolio

Part number	Family	Product description	USB standard	USB speed	LVDS	LVCMOS	Security features
CYUSB3082-FCAXI/T	EZ-USB™ FX5	USB 3.2 Gen 1 USB 5 Gbps peripheral controller	USB 3.2 Gen1	5 Gbps	–	✓	–
CYUSB3083-FCAXI/T	EZ-USB™ FX5	USB 3.2 Gen 1 USB 5 Gbps peripheral controller	USB 3.2 Gen1	5 Gbps	✓	✓	–
CYUSB3084-FCAXI/T	EZ-USB™ FX5	USB 3.2 Gen 1 USB 5 Gbps peripheral controller	USB 3.2 Gen1	5 Gbps	✓	✓	✓
CYUSB3282-FCAXI/T	EZ-USB™ FX5N	USB 3.2 Gen 1x2 USB 10 Gbps peripheral controller with Dual 5 Gbps Lane	USB 3.2 Gen 1x2	10 Gbps	✓	✓	–
CYUSB3284-FCAXI/T	EZ-USB™ FX5N	USB 3.2 Gen 1x2 USB 10 Gbps peripheral controller with Dual 5 Gbps Lane	USB 3.2 Gen 1x2	10 Gbps	✓	✓	✓
CYUSB4012-FCAXI/T	EZ-USB™ FX10	USB 3.2 Gen 2 USB 10 Gbps peripheral Controller	USB 3.2 Gen2	10 Gbps	–	✓	–
CYUSB4013-FCAXI/T	EZ-USB™ FX10	USB 3.2 Gen 2 USB 10 Gbps peripheral controller	USB 3.2 Gen2	10 Gbps	✓	✓	–
CYUSB4014-FCAXI/T	EZ-USB™ FX10	USB 3.2 Gen 2 USB 10 Gbps peripheral controller	USB 3.2 Gen2	10 Gbps	✓	✓	✓
CYUSB4022-FCAXI/T	EZ-USB™ FX20	USB 3.2 Gen 2x2 USB 20 Gbps peripheral controller	USB 3.2 Gen 2x2	20 Gbps	✓	–	–
CYUSB4024-FCAXI/T	EZ-USB™ FX20	USB 3.2 Gen 2x2 USB 20 Gbps peripheral controller	USB 3.2 Gen 2x2	20 Gbps	✓	✓	✓

Boards

EZ-USB™ FX5 KIT_FX5_FMC_001	EZ-USB™ FX10 KIT_FX10_FMC_001	EZ-USB™ FX5N KIT_FX5N_FMC_001	EZ-USB™ FX20 KIT_FX20_FMC_001	EZ-USB™ FX20 DEMO_FX20_MIPI_001
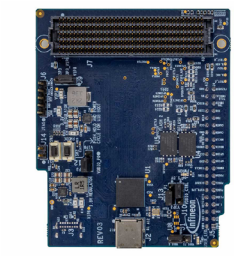	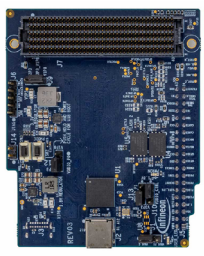	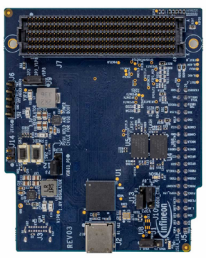	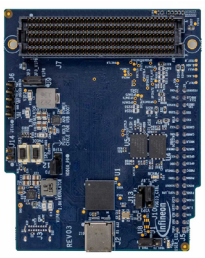	

www.infineon.com/superspeed

Camera · Machine vision · Spectrum analyzer · Medical · Video frame grabber

Peripheral controllers for USB 2.0

EZ-USB™ FX2G3 USB 2.0 peripheral controller

Solutions for high-speed, full-speed, and low-speed devices

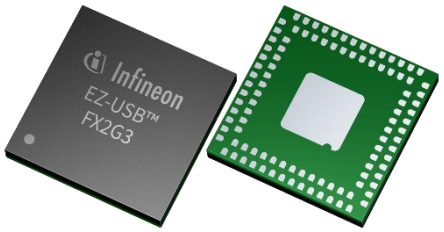

Since 1996, EZ-USB™ has been setting the standard for the industry by enhancing the capabilities of programmable USB peripheral controllers, enabling developers to design USB devices that can meet the most stringent performance requirements in industrial and imaging applications. More significantly, Infineon's first-rate customer service and long-term supply guarantees your successful product life cycles last for more than ten years. The complete portfolio of USB 2.0 programmable peripheral controllers supports low-speed and full-speed options with EZ-USB™ E3 and high-speed options with the latest dual-core Arm® Cortex® -M4F/M0+ addition - EZ-USB™ FX2G3.

EZ-USB™ FX2G3 are highly integrated USB microcontrollers that are the basis for any USB high-speed peripheral device. To take full advantage of the USB 2.0 480 Mbps signaling rate, EZ-USB™ FX2G3 contains specialized hardware to buffer USB data and to connect seamlessly to a variety of high-bandwidth external devices, such as MCUs, ASICs, and FPGAs.

	FX2G3 (Gen-3)	FX2G2 (Gen-2)	FX2LP
Part number	CYUSB231X	CYUSB201X	CY7C68XX
USB (end point)	USB 2.0 HS (32 EP)	USB 2.0 HS (32 EP)	USB 2.0 HS (7 EP)
FPGA interface	16-bit LVCMOS	32-bit LVCMOS (100 MHz SDR)	16-bit LVCMOS (48 MHz SDR)
Core CPU	Dual Core - Arm® Cortex® -M4F/M0+	Arm9™	8051
Flash memory	512 KB	–	–
SRAM	1024 KB + 128 KB	512 KB	16 KB
USB-C mux	✓	–	–
Security	✓ (AES, DES, SHA, RSA)	–	–
Serial interface	Quad-SPI, CAN, SPI, I²C, UART	I²C, SPI, UART	I²C, UART
Package	104-LGA (8 x 8 mm)	121-BGA (10 x 10 mm)	56-QFN/BGA/ SSOP, 100/128 -TQFP
Software	Modus Toolbox™, EZ-USB™ FX Control Center, GPIF III designer, Code builder	EZ-USB™ Control Center	EZ-USB™ Control Center
Availability	Now (recommended for new designs)	Now	EOL (not for new design)

www.infineon.com/usb2

Features and benefits

Key features

- USB 2.0 Hi-speed (480 Mbps)
- Arm® Cortex®-M4F and Cortex®-M0+
- 1024 KB + 128 KB SRAM, 512 KB Flash
- Crypto engine: AES, DES, SHA, RSA
- 1024 KB + 128 KB SRAM, 512 KB Flash
- QSPI, SPI, UART, CAN, and I²C support

Key benefits

- Achieve faster, scalable data transfers
- Handle complex designs with enhanced processing power and memory
- Optimized for consumer, industrial, and automotive use cases
- Accelerate development and time-to-market

Block diagram

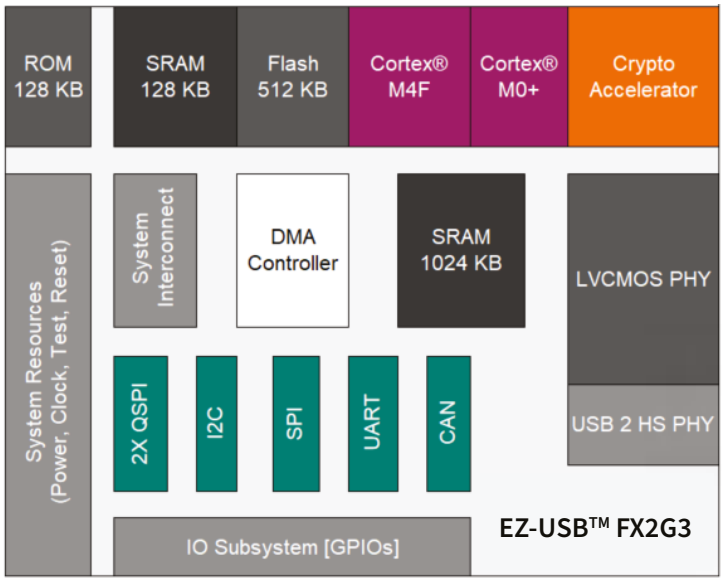

Product portfolio

Part number	Package	Temp [°C]	MCU	SRAM [KB]	FLASH [KB]	GPIF/FIFO	No. of SCBs	I2C UART	SPI	CAN	QSPI	Crypto
CYUSB2315-BF104AXI(T)	104 LGA	-45 to 85	M0+	512	256	16-bit	1	✓	–	–	–	–
CYUSB2316-BF104AXI(T)	104 LGA	-45 to 85	M0+	512	256	16-bit	3	✓	✓	✓	–	–
CYUSB2317-BF104AXI(T)	104 LGA	-45 to 85	M0+	512	512	16-bit	6	✓	✓	✓	✓	–
CYUSB2318-BF104AXI(T)	104 LGA	-45 to 85	M4/ M0+	1024	512	16-bit	6	✓	✓	✓	✓	✓

www.infineon.com/usb2

Board

KIT_FX2G3_104LGA

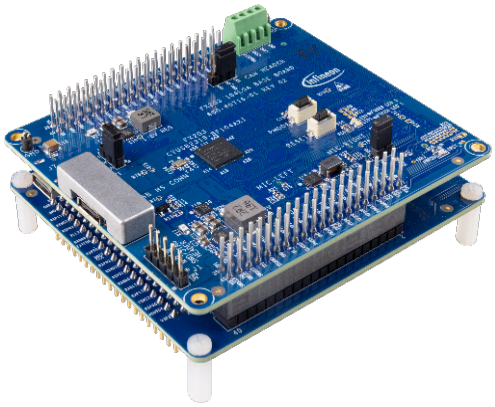

The EZ-USB™ FX2G3 Development KIT_FX2G3_104LGA kit is designed to help users get started with their EZ-USB™ FX2G3 design. Customers can use this development kit to evaluate the EZ-USB™ FX2G3 code examples before developing their own application. The kit comprises an EZ-USB™ FX2G3 baseboard and an EZ-USB™ FPGA add-on board. The base board consists of an EZ USB™ FX2G3 device, power supplies, a CAN transceiver, an OPTIGA™ Trust M module, USB-C HS and FS connectors for data transmission and debugging, respectively, and GPIO interface connectors for add-on modules. FPGA add-on board consists of T20 FPGA from EFINIX, DDR3 SDRAM, PDM microphones, NOR flash, power supplies, 22-pin FPC interface connectors, and GPIO interface connectors.

www.infineon.com/usb2

Automotive Desktop Dock Medical

Printer Router Biometric payment NFC sensing IoT

EZ-USB™ serial bridge controller

Discover a wide portfolio of full-speed bridge controllers with configurable and fixed functions

The EZ-USB™ serial bridge controller is a full-speed bridge controller family offering configurable and fixed-function options that provide connectivity between USB and serial interfaces, UART, SPI, and I²C. With the lowest power consumption in standby mode (5 µA), these bridge controllers are the first in the market to offer programmable serial channels for UART/I²C/SPI interfaces. With the latest addition of fixed-function controllers, they can be easily configured to work as USB to UART, USB to I²C, or USB to SPI bridges without requiring any firmware development by the user. The EZ-USB™ Serial Bridge Controller family integrates the industry-leading CAPSENSE™ capacitive-touch sensing technology (for touch-sensitive key switches) and battery charger detection compliant with USB-IF battery charging specification ver. 1.2 to detect the source of power on the USB port.



	USB-UART bridge controller			USB-I²C bridge controller	USB-SPI bridge controller	USB-serial configurable bridge controller			USB-billboard controller		
	CY7C65213/A	CY7C65223/D	CY7C65223-24LQXS/T	CY7C65216/D	CY7C652148/214D	CY7C65211/A	CY7C65215/A	CY7C65211A-24LQXS/T	CY7C65210/A	CY7C65217/217A1	CY7C65210A-24LQXS/T
Application	Industrial, consumer	Industrial, consumer	Automotive	Industrial, consumer	Industrial, consumer	Industrial, consumer	Industrial, consumer	Automotive	Industrial, consumer	Industrial, consumer	Automotive
Number of channels	Single	Single/dual	Single	Single/dual	Single/dual	Single	Dual	Single	Single	Dual	Single
GPIOs	8	4/7	4	8/12	6/8	10	17	10	9/11	7/9	11
Interface supported	UART	UART	UART	I²C	SPI	SPI I²C UART	SPI I²C UART	SPI I²C UART	I²C	I²C	I²C
SPI width	–	–	–	–	4–16 bit	4–16 bit	4–16 bit	4–16 bit	–	–	–
Main/replica	–	–	–	main/replica	main	main/replica	main/replica	main/replica	main	main	main
UART speed, pins	3 Mbps, 8	3 Mbps, 4	3 Mbps, 2/4/6	–	–	3 Mbps, 2/4/6	3 Mbps, 2/4/6	3 Mbps, 2/4/6	–	3 Mbps, 2	–
Battery charger detection (BCD)	✓	✓	✓	✓	✓	✓	✓	✓	–	–	✓
CAPSENSE™ buttons	–	–	–	–	–	8	5	5	–	–	–
Flow control	HW	HW, SW	HW, SW	–	–	HW	HW	HW	–	–	–
Packages	32-QFN/28-SSOP	24-QFN/32-QFN	24-QFN	24-QFN/32-QFN	24-QFN/32-QFN	24-QFN	32-QFN	24-QFN	24-QFN	24-QFN	24-QFN

Automotive · Desktop · Dock · Medical

Printer · Router · Biometric payment · NFC sensing · IoT

www.infineon.com/serial-bridge-controllers

Features and benefits

Key features

- Dual-channel UART, I²C, or SPI to USB bridge
- Supports up to 8 CAPSENSE™ buttons
- Configurable and fixed function options
- BCD compliant to USB-IF battery charging revision 1.2
- Integrated regulator, oscillator, and termination resistors
- Driver support for major operating systems
- Configuration utility for VID/PID and serial interfaces
- Supports multiple USB device classes: CDC, PHDC, HID, and vendor specific device classes

Key benefits

- Easy to design, without firmware nor software development
- Industry's lowest power consumption in standby mode
- Ideal for low-power devices
- Compatibility
- Minimization of switching costs

Block diagram

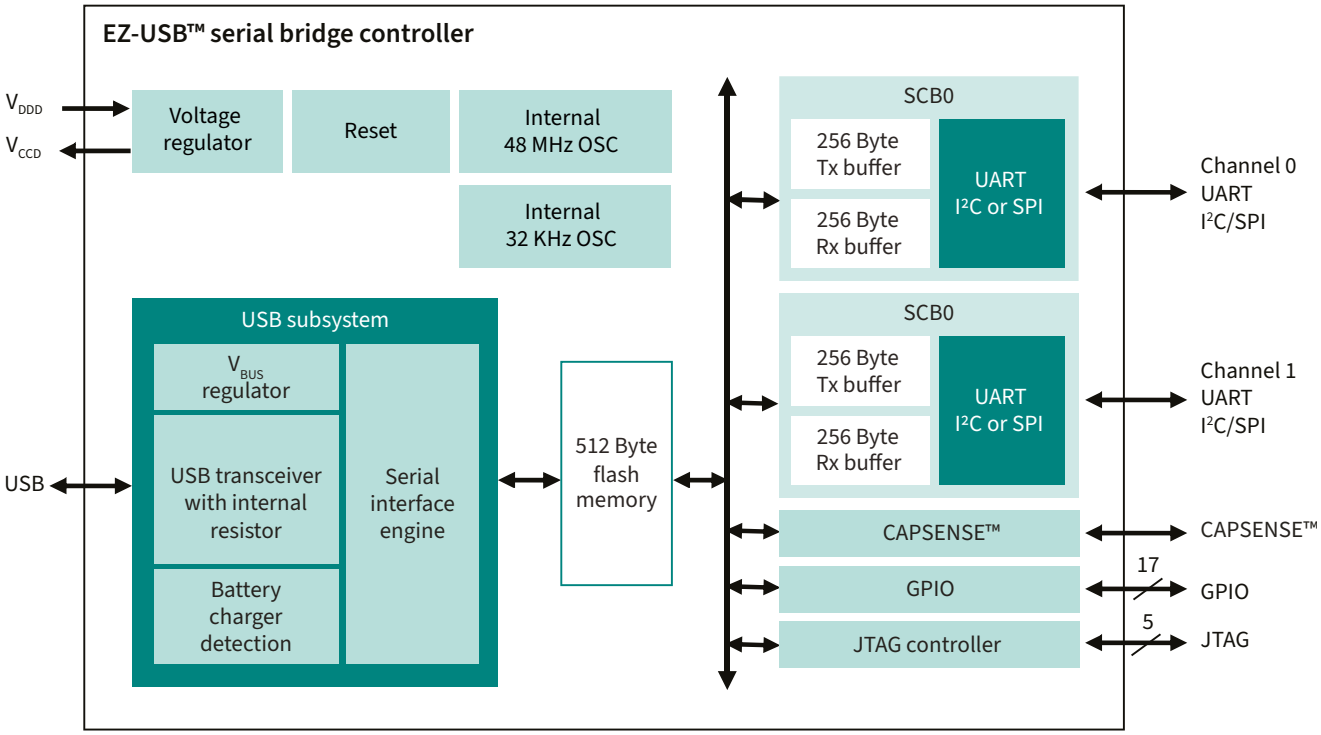

www.infineon.com/serial-bridge-controllers

Boards

EZ-USB™ serial bridge controller CYUSBS234	EZ-USB™ serial bridge controller CYUSBS236	EZ-USB™ serial bridge controller CYUSBS232
		
CYUSBS234 development kit (DVK) helps evaluate the features of the single-channel EZ-USB™ Serial Bridge Controller CY7C65211. The kit provides a copper pad on PCB to test CAPSENSE™ feature, a set of EEPROMs to test I²C and SPI interfaces, a RS232 line driver to test UART interfaces.	CYUSBS236 development kit (DVK) helps evaluate the features of the dual-channel EZ-USB™ serial bridge controller CY7C65215. The kit provides two copper pads on the PCB to test CAPSENSE™ feature, two pairs of EEPROMs to test I²C and SPI interfaces, two RS232 line drivers to test UART interfaces.	CYUSBS232 reference design kit (RDK) is a low-cost kit to evaluate EZ-USB™ serial bridge controller CY7C65213. The kit, along with its hardware documentation, serves as a reference design for applications like USB-UART cables.
Kit based on CY7C65211-24LTXI	Kit based on CY7C65215-32LTXI	Kit based on CY7C65213-32LTXI

USB hubs and USB Type-C port controllers

Robust interoperability, extensive charging support, and full configurability

Infineon offers a broad portfolio of hub controllers supporting USB 2.0, USB 3.x 5 Gbps, 10 Gbps, and USB Type-C ports with robust backward interoperability with legacy USB speeds. The USB 3.x hub controllers provide advanced USB PD and battery charging capabilities, featuring up to eight downstream ports for full configurability and flexible design.

Features

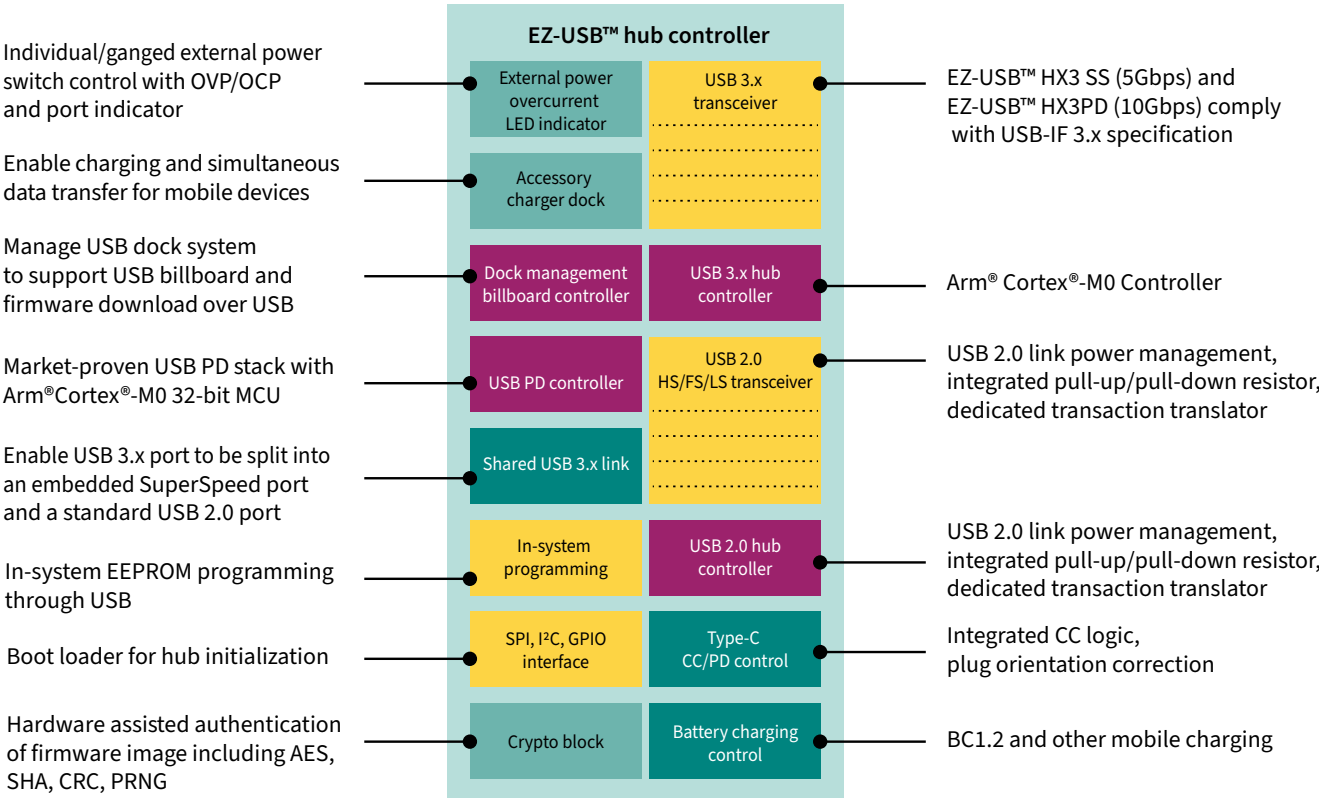

www.infineon.com/usbhubs

EZ-USB™ HX3 USB 5 Gbps hub controller

USB 3.x 5 Gbps 4-port hub controller with SS/USB 2.0 PHY shared link, DS ports charging, and automotive grade



EZ-USB™ HX3 is Infineon's USB-IF-certified 4-port hub controller. It has been repeatedly tested at every USB plug-fest and in independent labs, demonstrating compatibility with all recognized host controllers, device classes, and operating systems. It supports most USB charging standards, including battery charging specification v1.2, Apple charging standard, YD/T 1591-2006, and ACA-dock. This last feature of the EZ-USB™ HX3 enables simultaneous use of USB devices connected to the downstream ports and charging of a smartphone or tablet that supports USB OTG. It also supports battery charging on the downstream ports without a host attached to the upstream port.

The configurable USB 5 Gbps and USB 2.0 PHY of the EZ-USB™ HX3 enhance signal quality, giving board designers more flexibility and simplifying USB-IF compliance. EZ-USB™ HX3 also supports shared USB links, a proprietary feature that doubles the number of USB ports, creating eight ports from a 4-port hub controller. **For HX2G3, engineering samples are already available. Full-production expected by CQ2-2026.**

Features/Part	CYUSB3302	CYUSB3304	CYUSB3312	CYUSB3314	CYUSB3324	CYUSB3326	CYUSB3328	CYUSB2302	CYUSB2304
Number of DS ports	2 (USB 3.0)	4 (USB 3.0)	2 (USB 3.0)	4 (USB 3.0)	4 (USB 3.0)	6 (4 SS , 2 USB 3.0, 2 USB 2.0)	8 (4 SS , 4 USB 2.0)	2 (USB 2.0)	4 (USB 2.0)
Number of shared links ports	0	0	0	0	0	2	4	0	0
BC v1.2	Yes	Yes	Yes	Yes	Yes	Yes	Yes	Yes	Yes
ACA-dock	No	No	No	No	Yes	No	Yes	No	No
External power switch control	Ganged	Ganged	Individual and ganged	Individual and ganged	Individual and ganged	Individual	Individual	Ganged	Ganged
Pin-strap support	No	No	Yes	Yes	Yes	Yes	Yes	No	No
I²C	Yes	Yes	Yes	Yes	Yes	Yes	Yes	Yes	Yes
Vendor command	Yes	Yes	Yes	Yes	Yes	Yes	Yes	Yes	Yes
Port indicators	No	No	Yes	Yes	Yes	No	No	No	No
Packages	68-QFN, 100-ball BGA	68-QFN, 100-ball BGA	88-QFN, 100-ball BGA	88-QFN, 100-ball BGA	88-QFN, 100-ball BGA	88-QFN, 100-ball BGA	88-QFN, 100-ball BGA	68-QFN, 100-ball BGA	68-QFN, 100-ball BGA
Temperature range	Industrial, commercial, and automotive	Industrial, commercial, and automotive	Industrial and commercial	Industrial, commercial, and automotive	Industrial, commercial, and automotive	Industrial and commercial	Industrial (88-QFN only) and commercial	Industrial, commercial, and automotive	Industrial, commercial, and automotive

www.infineon.com/hx3

Automotive Desktop Dock

Features and benefits

Key features

- Compliant with USB 3.2 Gen 1 (USB-IF and WHQL certified)
- Shared link feature (supports simultaneous USB 2.0 and SuperSpeed USB devices on the same port)
- Enables USB charging while the hub is disconnected from a hub host
- Supports BC v1.2 and Apple charging
- Allows firmware upgrades using I²C EEPROM or an external I²C master
- Integrated Arm® Cortex®-M0 CPU
- LED status indicators: suspend, SS, and USB 2.0 operation

Key benefits

- Supports up to 4 USB 3.0 compliant DS ports
- Enables extra downstream (DS) ports for on-board connections in embedded applications
- Enables charging of devices connected to the DS ports when no host is connected on the upstream (US) port
- Easy-to-customize configuration parameters
- High quality and reliability

Block diagram

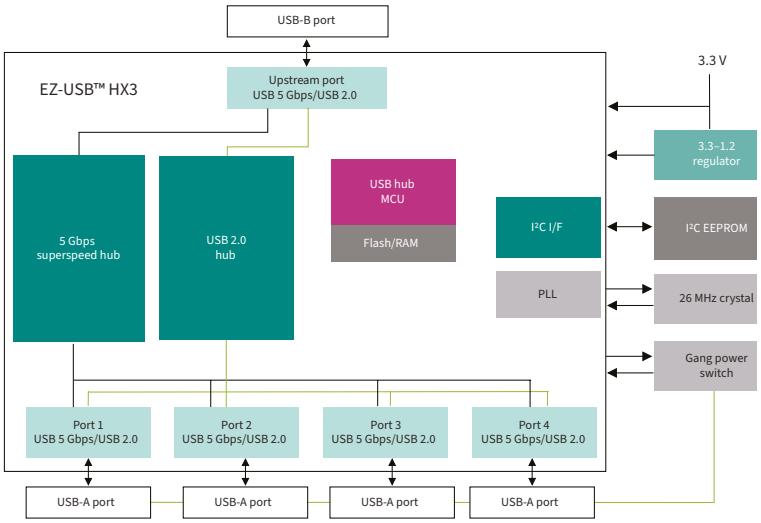

Boards

EZ-USB™ HX3 CY4613	EZ-USB™ HX3 CY4609	EZ-USB™ CY4603
		
It is a development kit aimed to demonstrate EZ-USB™ HX3's shared link feature in a 6-port configuration supporting ACA-dock functionality.	It is a reference design kit that can be used as a reference design for standalone USB 3.0 hub applications.	It is a development kit that demonstrates EZ-USB™ HX3's application in a 4-port 3.0 USB hub.

www.infineon.com/hx3

EZ-USB™ HX2G3 USB 2.0 hub controller

Solutions for high-speed, full-speed, and low-speed connectivity

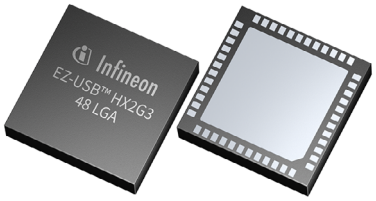

For many years, EZ-USB™ HX2LP has been defining the standard solution for USB 2.0 Hub controllers. With the start of 2026, Infineon proudly presents EZ-USB™ HX2G3, an advanced USB 2.0 hub controller tailored for modern connectivity solutions across consumer, docking and automotive applications. With support for Hi-Speed (480 Mbps), Full-Speed (12 Mbps), and Low-Speed (1.5 Mbps) data rates, this versatile controller offers multiple upstream and downstream port configurations to address a wide range of design requirements. The integrated Arm® Cortex®-M0+ CPU and extensive customization capabilities enable seamless integration and dynamic functionality. With features like USB power delivery (PD) support, hub cascading for reduced BOM costs, and robust in-system programming (ISP) options, the HX2G3 delivers scalable, cost-effective, and future-ready USB performance. Engineered with a focus on long-term availability, EZ-USB™ HX2G3 is here to support your designs for years.

	EZ-USB™ HX2G3	EZ-USB™ HX2VL	EZ-USB™ HX2LP
Part numbers	CYUSB2332 [Auto], CYUSB234X [Dock], CYUSB235X (Consumer/Industrial)	CY7C6563X, CY7C6564X	CY7C6563X, CY7C6564X
USB version	USB 2.0 (480 Mbps)	USB 2.0 (480 Mbps)	USB 2.0 (480 Mbps)
Downstream ports	Up to 4 ports (configurable: 1:4, 1:2, 2:4, 3:3)	Up to 4 ports	Up to 4 ports
Upstream ports	Configurable: 1, 2, or 3 US ports	1 US port	1 US port
Integrated CPU	Arm® Cortex®-M0+ (32 KB RAM, 32 KB ROM)	Single MCU (2 KB ROM, 64-byte RAM)	–
Power management	Individual/Ganged, Dynamic US port selection, USB PD support	Individual/ganged, overcurrent detection	Individual/ganged, overcurrent detection
Firmware upgradeability	In-System Programming (ISP), via USB or I2C/SPI	Configurable VID/PID with external EEPROM	ISP via external EEPROM
Configurable features	VID/PID, hub configuration, FS device support	Configurable VID/PID, port count, removable ports via external EEPROM	Configurable VID/PID, active ports, removable ports, power settings, string descriptors
Integrated billboard device	Optional CDC/billboard device class support	–	–
Hub cascade mode	Shared reference clock for cascaded hubs	–	–
Operating voltage	Wide voltage support, external LDO option	Single 5 V input (internal regulator)	Single 5 V input (internal regulator)
Operating temperature range	-40°C to 85°C	0°C to 70°C	-40°C to 85°C
Integrated LDO regulator	Optional	Internal regulator for single 5 V input	Internal regulator for single 5 V input
External interfaces	I²C slave/master, SPI, GPIO	I/O pins for port configuration, PWM, etc.	SPI for EEPROM programming
USB PHY configurability	Configurable, DP/DM signal swap	Limited configurability via mask ROM or EEPROM	USB PHY parameters configurable via EEPROM
Package options	40-QFN, 48-LGA, 36-LGA	48-pin TQFP and 28-pin QFN	56-pin QFN
Availability	ES: Now, MP: CQ2-2026	Now	EOL

www.infineon.com/hx2g3

Features and benefits

Key features

- USB 2.0 Hi-Speed (480 Mbps), full-speed and low-speed supported
- Flexible port configurations: 1:4, 1:2, 2:4, 3:3
- Integrated Arm® Cortex®-M0+ with 32 KB RAM/ROM
- Extensive customization via EZ-USB™ tools
- USB PD support and Hub cascading

Key benefits

- Versatile for consumer, docking, and automotive applications
- Reduces BOM costs with cascading support
- Easy integration with in-system programming
- Future-ready with USB PD and port flexibility

Block diagram

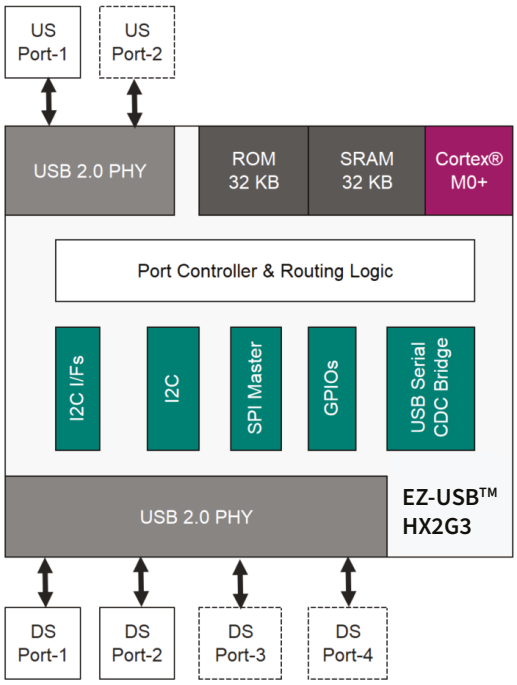

Product portfolio

Part number	US:DS port configs supported	Temp support [°C]	LDO	Package	Application
CYUSB2332-40LDXS(T)	1:2	-40 to 105	Yes	40 QFN, 6x6 mm, 0.5 mm pitch, wettable flanks	Automotive
CYUSB2343-40LTXI(T)	(1:4) or (2:4) or (3:3)	-40 to 85	No	40 QFN, 5x5 mm, 0.4 mm pitch	Docking
CYUSB2344-48BFXI(T)	(1:4) or (2:4) or (3:3)	-40 to 85	No	48 LGA, 6x6 mm, 0.4 mm pitch	
CYUSB2352-40LTXI(T)	1:2	-40 to 85	No	40 QFN, 5x5 mm, 0.4 mm pitch	Consumer/industrial
CYUSB2354-40LTXI(T)	1:4	-40 to 85	No	40 QFN, 5x5 mm, 0.4 mm pitch	
CYUSB2364-36BFXI(T)	1:4	-40 to 85	No	36 LGA, 6x6 mm, 0.5 mm pitch	

www.infineon.com/hx2g3

Automotive Desktop Dock

EZ-USB™ HX3PD USB 10 Gbps hub controller with USB PD

Industry's first 7-port USB 10 Gbps hub controller with power delivery

EZ-USB™ HX3PD is the industry's first 7-port USB 10 Gbps Type-C hub controller with power delivery. It supports two USB-C + PD ports (one upstream and one downstream) and five downstream USB 10 Gbps ports.

With five chips (two 4-port USB hub controllers, two USB PD controllers, and a dock management controller) integrated into one, EZ-USB™ HX3PD is the most integrated USB 10 Gbps hub in the market. This significantly reduces BOM component cost and PCB footprint, making EZ-USB™ HX3PD a perfect fit for USB-C dongles, docks, and monitors. Configurable shared USB 10 Gbps and USB 2.0 PHY functionality can improve USB 10 Gbps signal transmission quality, allowing board designers more freedom and simplifying USB-IF compliance.

Features and benefits

Key features

- Compliant with USB 3.1 gen 2
  - Upstream (US): 10Gbps; Type-A or Type-C plus PD
  - Downstream (DS): 7 ports; 5x 10Gbps, 2x 480Mbps; 1 Type-C Plus PD, 2 Type-C only, and 4 Type-A ports
- Integrated DFP (RP) and UFP (RD) termination resistors
- Integrated billboard controller
- Charging support: BC v1.24, Apple Charging standard
- PD policy engine configures power profiles dynamically
- Charging DS without US connection
- Optional signed firmware upgradable via dock management controller (DMC)

Key benefits

- USB-IF compliant 2x 4-port USB hubs with 2x USB PD 3.0
- Integrated total five chips into a single chip for BOM components and PCB board size reduction
- Integrated Crypto AES/SHA/CRC blocks for secured firmware upgrades via dock management controller
- Intel USB4/Thunderbolt 4 Dock reference design available
- Supports USB PD 3.0, BC1.2, Apple, Samsung, and QC 4.0 charging standards
- Provides USB PHY configurability to compensate signal loss over PCB traces

www.infineon.com/hx3pd

Block diagram

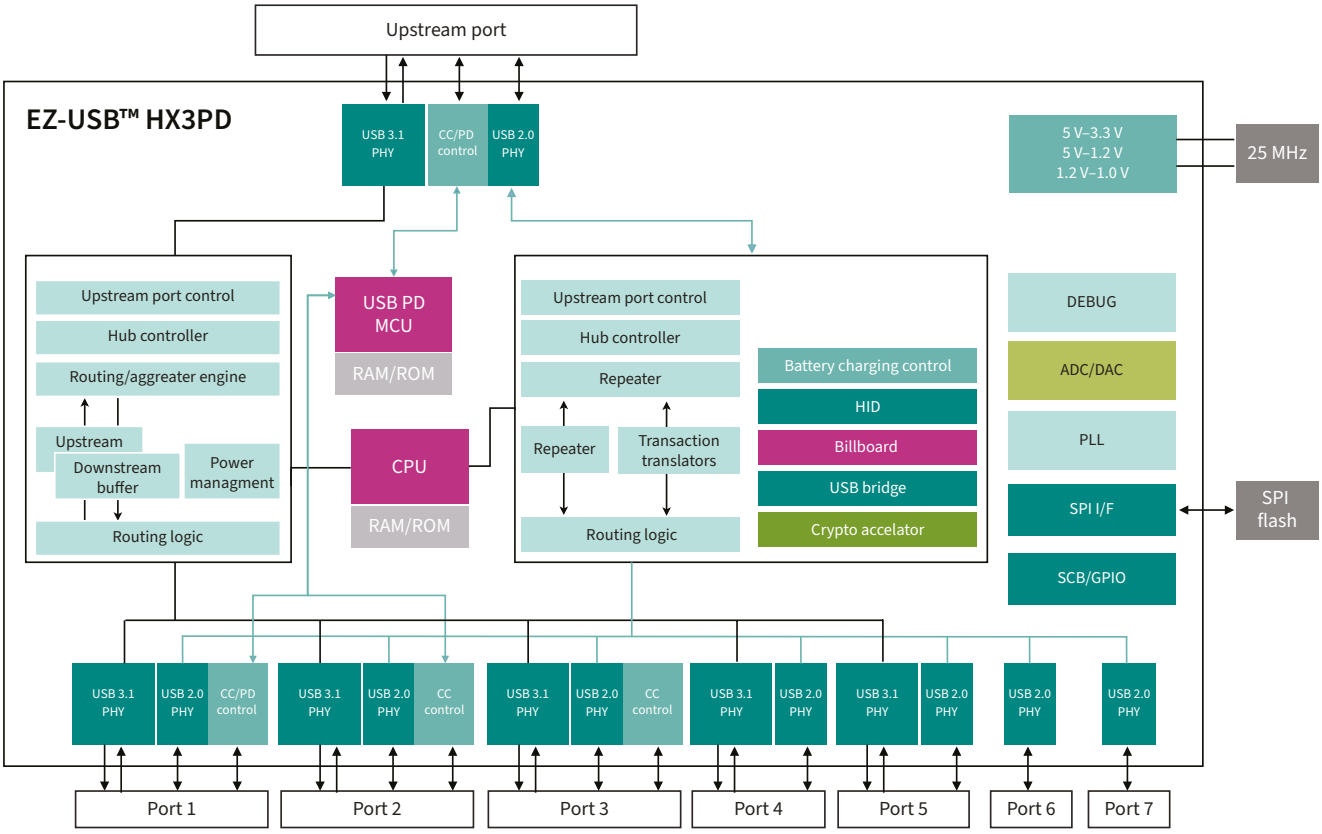

Application diagram

Thunderbolt4 Dock

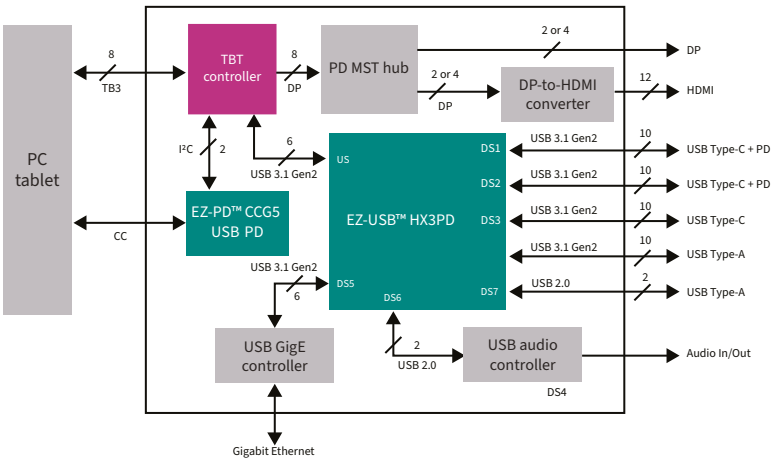

EZ-USB™ HX3PD allows to solve several challenges in the development of Thunderbolt dock designs such as:

- Thunderbolt dock design is complex, requiring many discrete components
- Thunderbolt dock requires pre-approved USB PD controller and a large BOM
- USB-C dock must support USB PD and all legacy charging standards
- USB 3.1 Gen2 signal integrity is difficult to handle at 10Gbps
- USB 3.1 Gen2 and PD need FW upgrade to keep pace with USB specification changes

www.infineon.com/hx3pd

Board

EZ-USB™ HX3PD CY6611



This evaluation kit is based on the CYUSB4347-BZXC, a 7-port evaluation kit designed to demonstrate the USB 3.1 Gen2 hub, USB PD 3.0, and USB battery charging (BC 1.2) functionalities.

www.infineon.com/hx3pd

Infineon powerful support

Your one-stop shop from design to delivery

Infineon, as a market leader in customized solutions, believes innovation comes through collaboration and exploring new paths. Working closely with our customers, understanding their needs, and combining them with our cutting-edge solutions, we know there is always a benefit for every customer and application. Whether the challenge is related to IP, BOM constraints, or simply requires higher integration, an ASIC can be the solution. Furthermore, customers benefit from Infineon's trusted quality, supply guarantee, and experience, which are complemented by additional advantages such as IP protection and a well-established partner network.

Connect with us

About Infineon
www.infineon.com/green
www.infineon.com/quality

General support
www.infineon.com/support
www.infineon.com/packages
www.infineon.com/wheretobuy
www.infineon.com/opn
www.infineon.com/academy

Technical support requests: here

Tools and simulators
Tool finder
Evaluation boards finder
Simulation model finder
Spice simulator
Infineon4Makers

Connect with us
Infineon developer community
Facebook
Instagram
LinkedIn
YouTube
TikTok

Infineon hotline – get connected with the answers

Infineon offers its toll-free service hotline as one central number, available 24/7 in english, mandarin, and german.

– Germany (toll-free): 0800 951 951 951 (German/English)
– China, Mainland (toll-free): 4001 200 951 (Mandarin/English)
– USA (toll-free): 1 866 951 9519 (English/German)
– India (toll-free): 1 800 572 4924 NEW (English)
– Other countries: 00* 800 951 951 951 (English/German)
– Direct access: +49 89 234 65555 (interconnection fee, German/English)

*Please note: Some countries may require you to dial a code other than “00” to access this international number. Please visit our service center for more information.

Published by
Infineon Technologies AG
Am Campeon 1-15, 85579 Neubiberg
Germany

© 2026 Infineon Technologies AG.
All rights reserved.

Public

Version: V1.0_EN
Date: 08/2026

Stay connected!

Scan QR code and explore offering
www.infineon.com