Hexagon Application Kit
CPU Board XMC4400 General Purpose

CPU_44A-V2

[1] Contents
[2] Satellite Connectors, USB-OTG
[3] XMC4400 (LQFP100)
[4] Power, Debug, Reset
[5] On-board Debugger

Fiducials

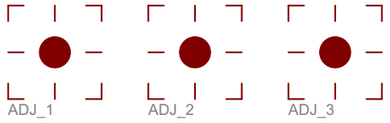

V2 / 08.10.2012 / Ma

Legal Disclaimer

The information given in this document shall in no event be regarded as a guarantee of conditions or characteristics. With respect to any examples or hints given herein, any typical values stated herein and/or any information regarding the application of the device, Infineon Technologies hereby disclaims any and all warranties and liabilities of any kind, including without limitation, warranties of non-infringement of intellectual property rights of any third party.

Contents
CPU_44A-V2
12.10.2012 15:09:42
Sheet: 1/5

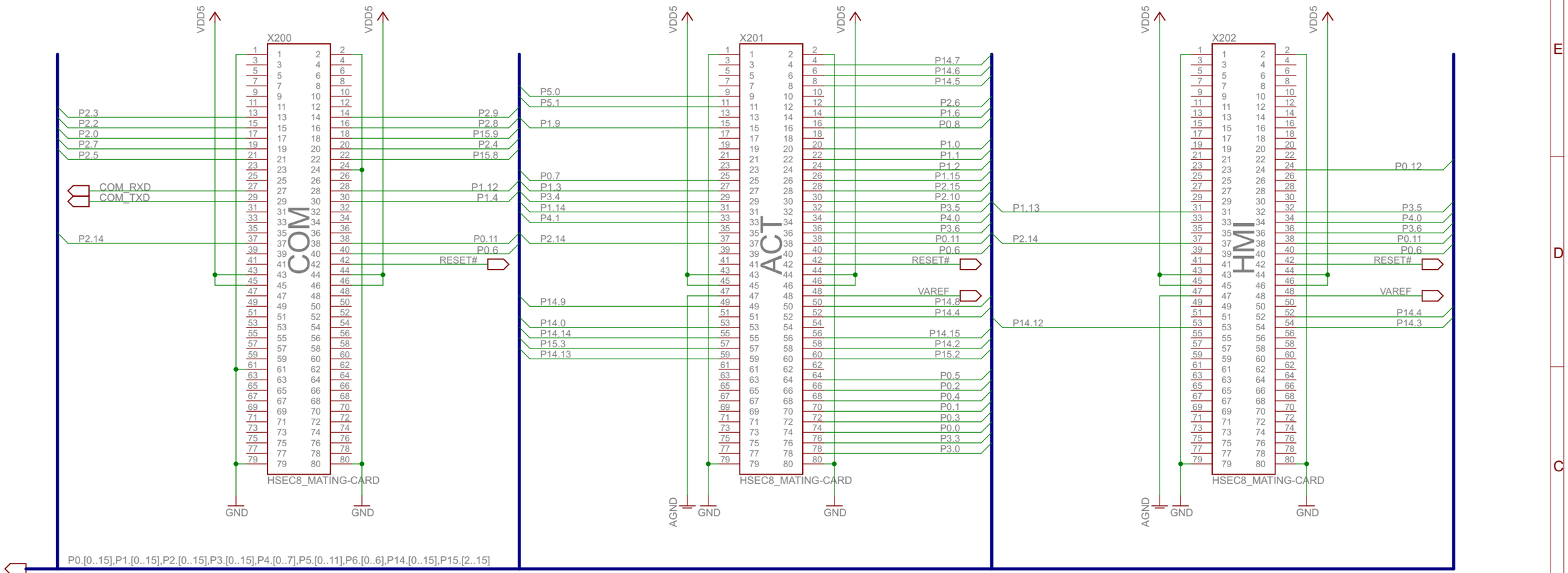

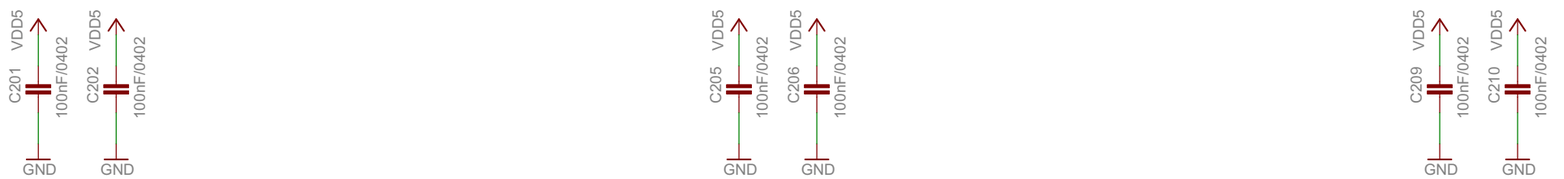

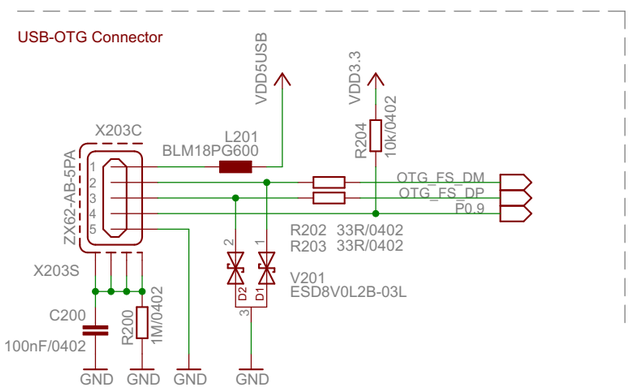

V2 / 08.10.2012 / Ma

Legal Disclaimer

The information given in this document shall in no event be regarded as a guarantee of conditions or characteristics. With respect to any examples or hints given herein, any typical values stated herein and/or any information regarding the application of the device, Infineon Technologies hereby disclaims any and all warranties and liabilities of any kind, including without limitation, warranties of non-infringement of intellectual property rights of any third party.

Satellite Con., USB-OTG	
CPU_44A-V2	
12.10.2012 15:09:42	
Sheet: 2/5	

Potentiometer, GPIO LEDs, I2C Pullups

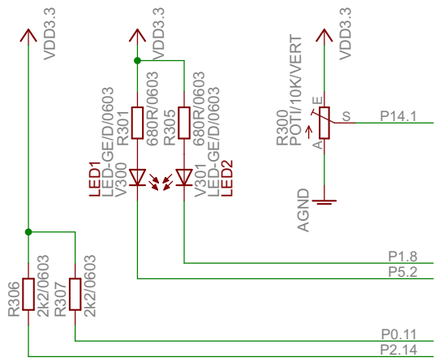

RGB LED

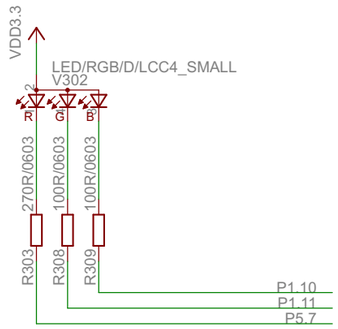

CPU

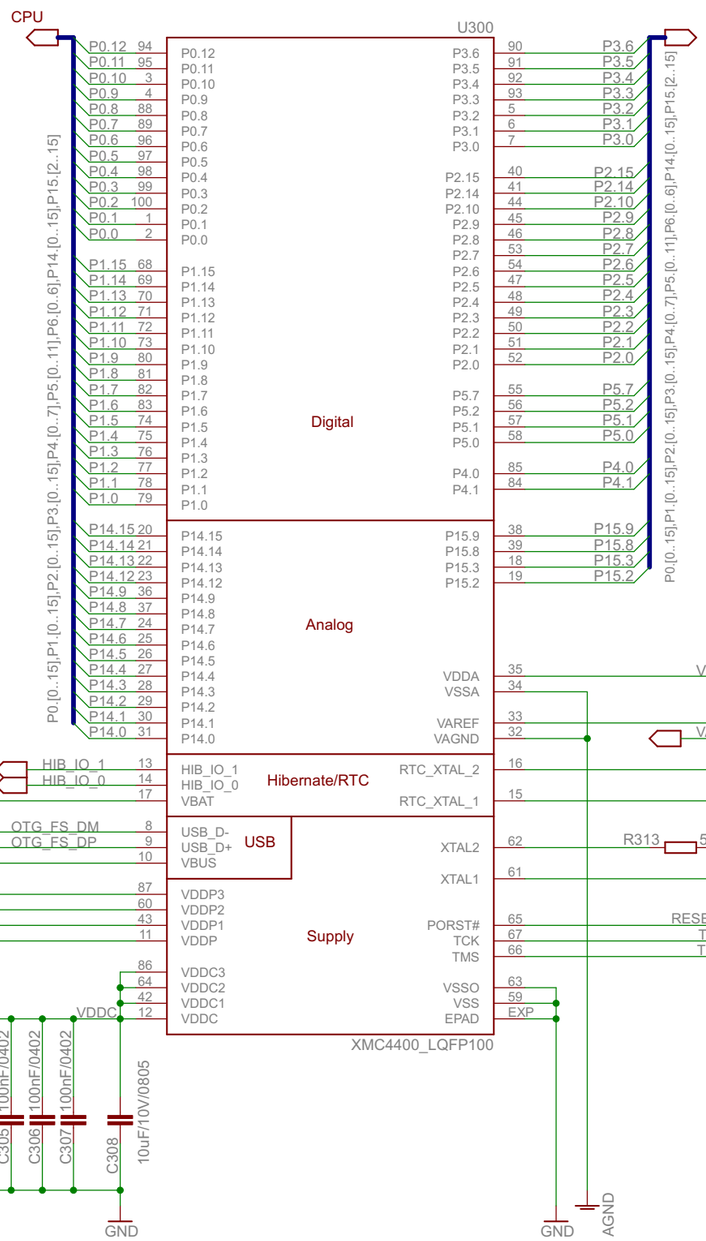

Boot Options

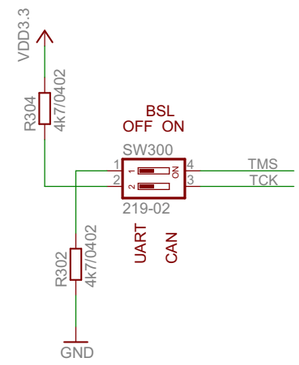

COM Board Switch

	UART USIC0CH0
P1.5	USIC_RxD
P1.7	USIC_TxD

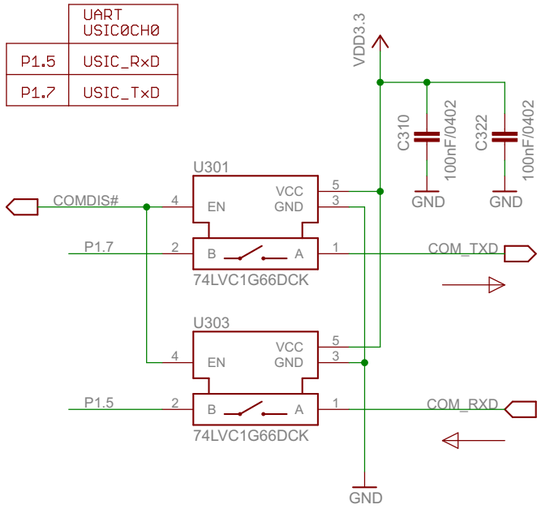

Push Buttons

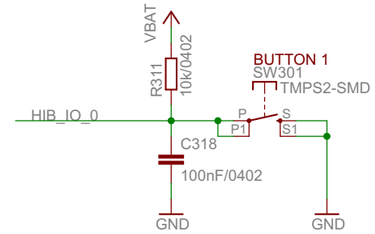

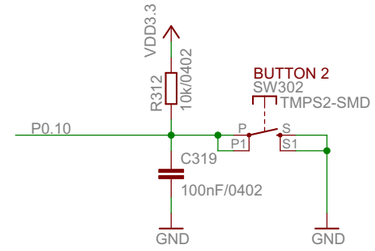

Jumper closed with a cutable trace on bottom layer

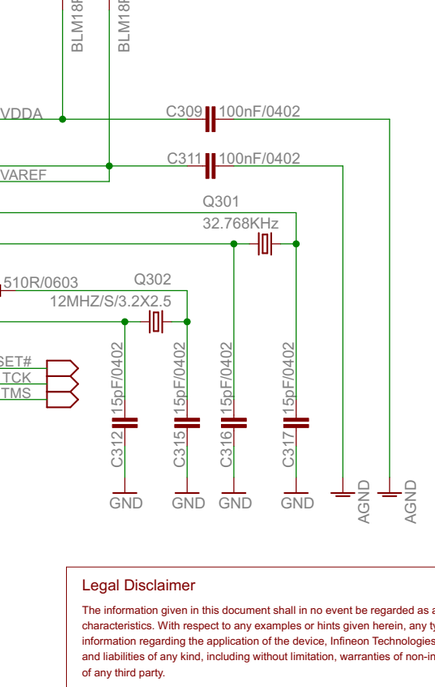

V2 / 08.10.2012 / Ma

Legal Disclaimer

The information given in this document shall in no event be regarded as a guarantee of conditions or characteristics. With respect to any examples or hints given herein, any typical values stated herein and/or any information regarding the application of the device, Infineon Technologies hereby disclaims any and all warranties and liabilities of any kind, including without limitation, warranties of non-infringement of intellectual property rights of any third party.

CPU	
CPU_44A-V2	
12.10.2012 15:09:42	
Sheet: 3/5	

Cortex Debug

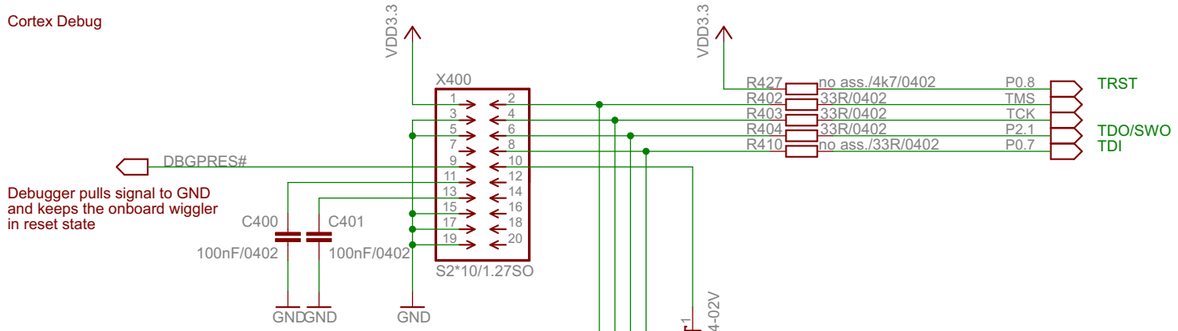

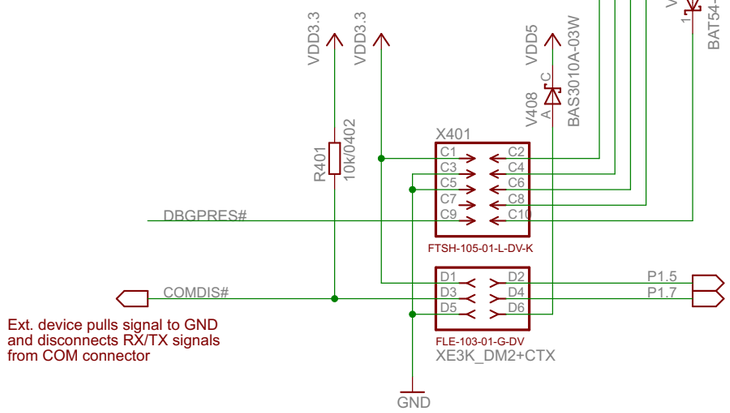

Ext. device pulls signal to GND
and disconnects RX/TX signals
from COM connector

	UART USIC0CH0
P1.5	USIC_RxD
P1.7	USIC_TxD

Layout placement

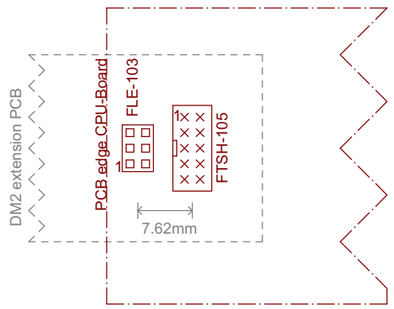

The DriveMonitor extension PCB hosts the CAN transceiver
and the UART switch logic connected to X401

VDD3.3 Supply

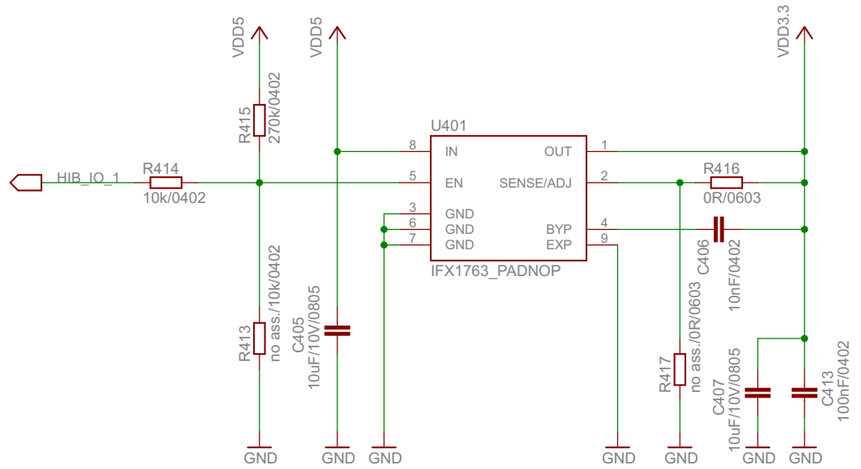

RTC Battery

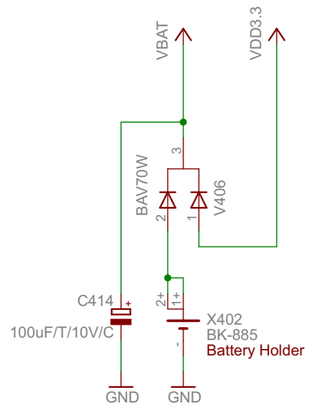

Reset

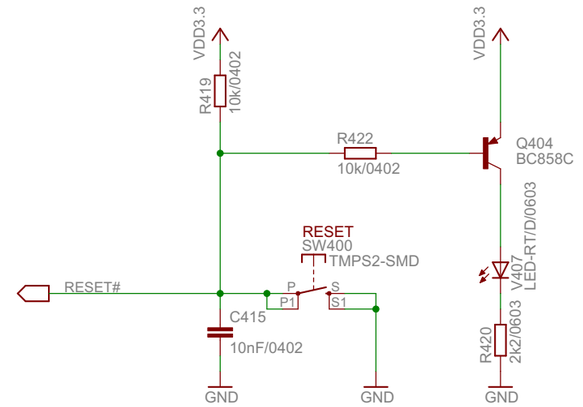

USB-OTG Supply

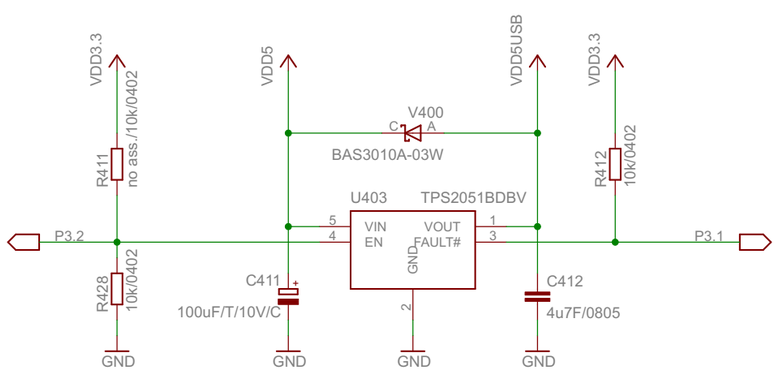

Power LED and Testpoints

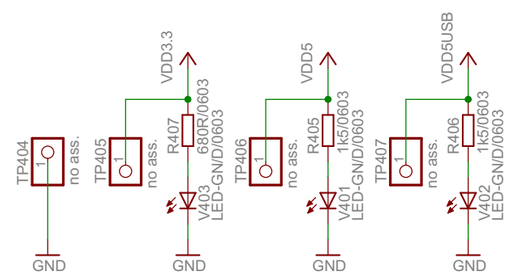

V2 / 08.10.2012 / Ma

Legal Disclaimer

The information given in this document shall in no event be regarded as a guarantee of conditions or characteristics. With respect to any examples or hints given herein, any typical values stated herein and/or any information regarding the application of the device, Infineon Technologies hereby disclaims any and all warranties and liabilities of any kind, including without limitation, warranties of non-infringement of intellectual property rights of any third party.

Power, Debug, Reset	
CPU_44A-V2	
12.10.2012 15:09:42	
Sheet: 4/5	

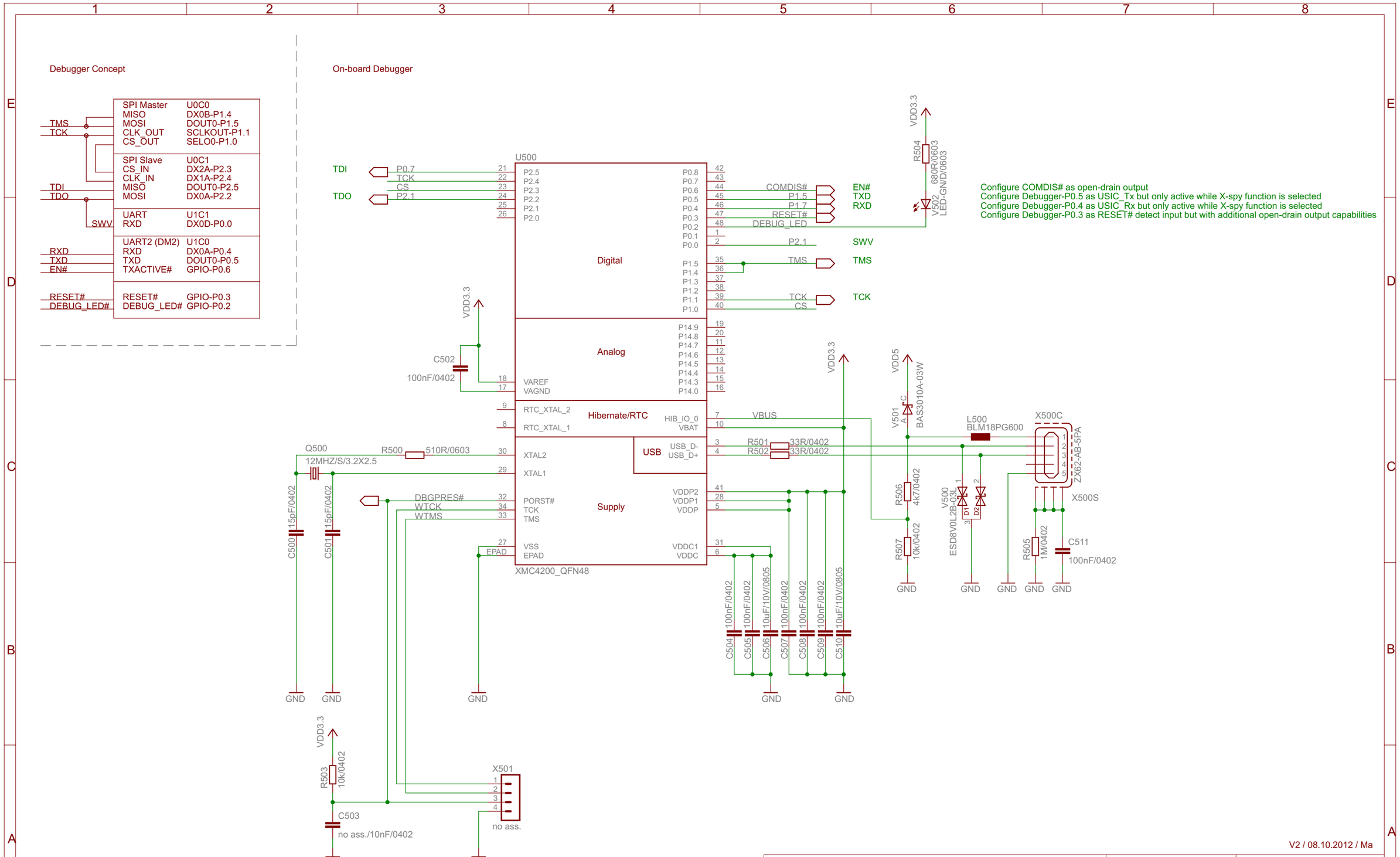

Legal Disclaimer

The information given in this document shall in no event be regarded as a guarantee of conditions or characteristics. With respect to any examples or hints given herein, any typical values stated herein and/or any information regarding the application of the device, Infineon Technologies hereby disclaims any and all warranties and liabilities of any kind, including without limitation, warranties of non-infringement of intellectual property rights of any third party.

On-board Debugger

CPU_44A-V2

12.10.2012 15:09:42

Sheet: 5/5