Hexagon Application Kit
CPU Board XMC4500 SDRAM

CPU_45B-V1

[1] Contents
[2] Satellite Connectors, USB-OTG
[3] XMC4500 (LFBGA144)
[4] Power, Debug, Reset, SDRAM
[5] On-board Debugger

Fiducials

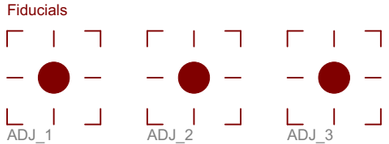

V1 / 04.04.2012 / Ma

Legal Disclaimer

The information given in this document shall in no event be regarded as a guarantee of conditions or characteristics. With respect to any examples or hints given herein, any typical values stated herein and/or any information regarding the application of the device, Infineon Technologies hereby disclaims any and all warranties and liabilities of any kind, including without limitation, warranties of non-infringement of intellectual property rights of any third party.

Contents
CPU_45B-V1
20.02.2013 08:40:35
Sheet: 1/5

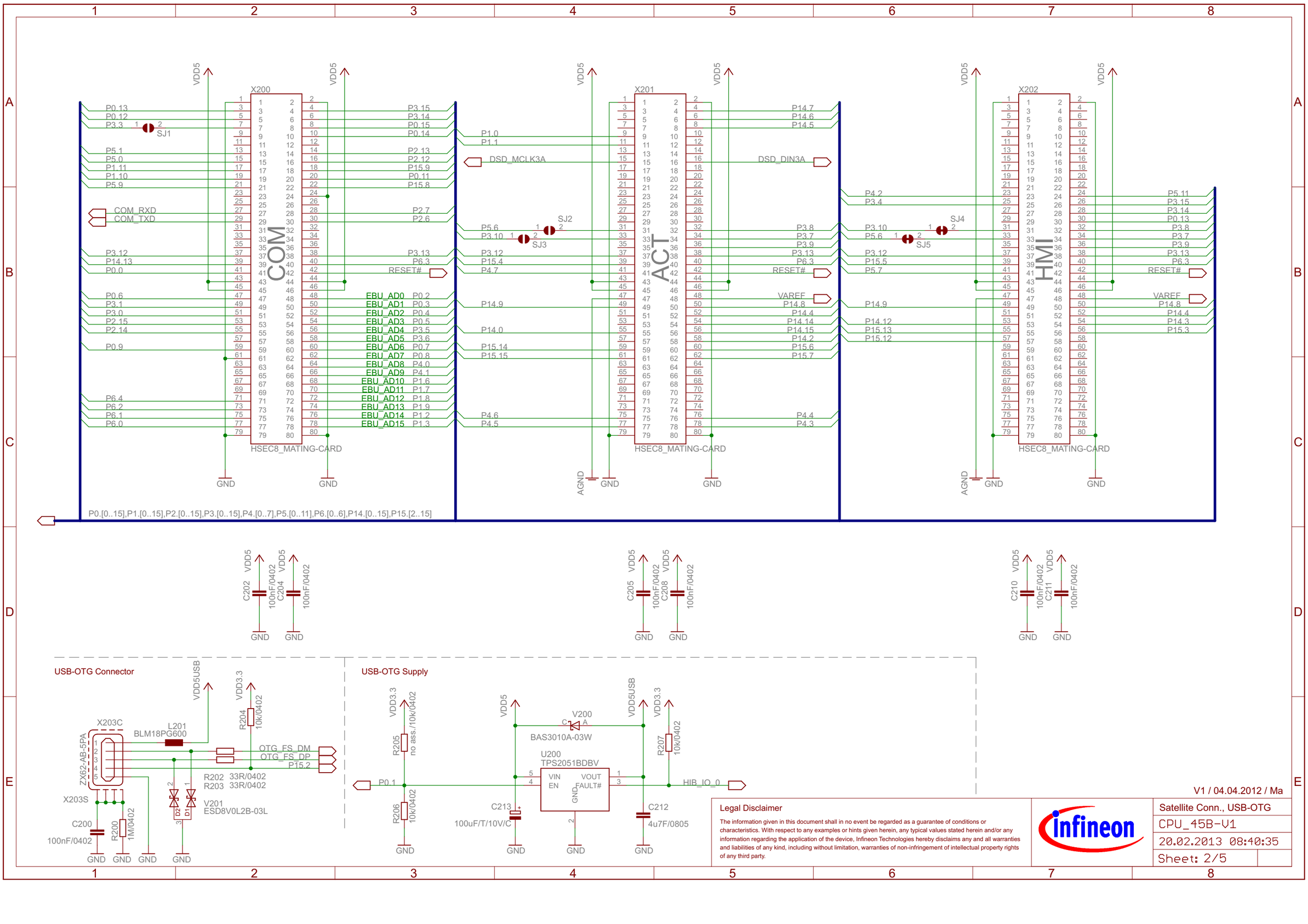

Legal Disclaimer

The information given in this document shall in no event be regarded as a guarantee of conditions or characteristics. With respect to any examples or hints given herein, any typical values stated herein and/or any information regarding the application of the device, Infineon Technologies hereby disclaims any and all warranties and liabilities of any kind, including without limitation, warranties of non-infringement of intellectual property rights of any third party.

V1 / 04.04.2012 / Ma

Satellite Conn., USB-OTG	
CPU_45B-V1	
20.02.2013 08:40:35	
Sheet: 2/5	

Potentiometer, GPIO LED, I2C Pullups

qSPI FLASH

CPU

Digital

Analog

Hibernate/RTC

USB

Supply

XMC4500_LFBGA144

I2C_DX
I2C_DOUT

Boot Options

BSL
OFF ON

SW300

219-02

UART
CAN

COM Board Switch

	UART USIC0CH0	CAN Node1
P1.4	USIC_RxD	CAN_RxD
P1.5	USIC_TxD	CAN_TxD

74LVC1G66DCK

Trace Signal / ACT Board Switch

Jumper closed with a cutable trace on bottom layer

Hitex PowerScale

S25FL032P0XMFI01

Q301
32.768KHZ

Q302
12MHZ/S/3.2X2.5

Legal Disclaimer

The information given in this document shall in no event be regarded as a guarantee of conditions or characteristics. With respect to any examples or hints given herein, any typical values stated herein and/or any information regarding the application of the device, Infineon Technologies hereby disclaims any and all warranties and liabilities of any kind, including without limitation, warranties of non-infringement of intellectual property rights of any third party.

V1 / 04.04.2012 / Ma

CPU	
CPU_45B-V1	
20.02.2013 08:40:35	
Sheet: 3/5	

Debug Connectors

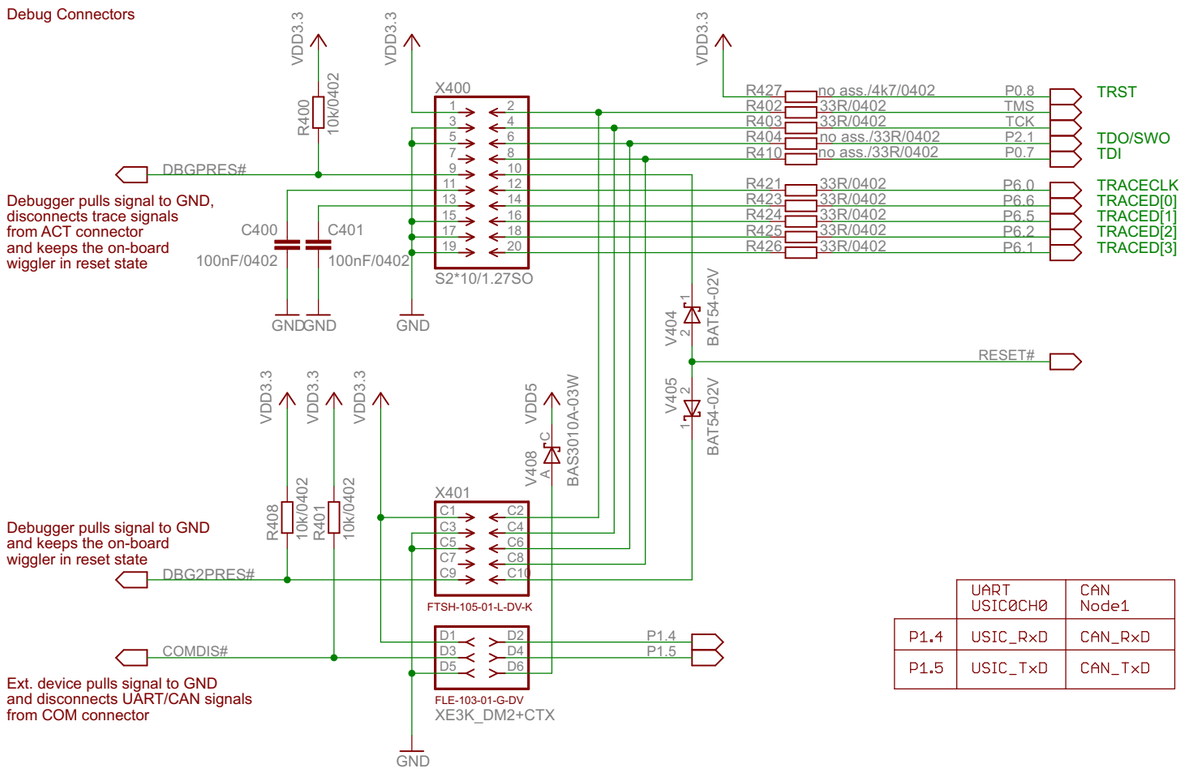

	UART USIC0CH0	CAN Node1
P1.4	USIC_RxD	CAN_RxD
P1.5	USIC_TxD	CAN_TxD

VDD3.3 Supply

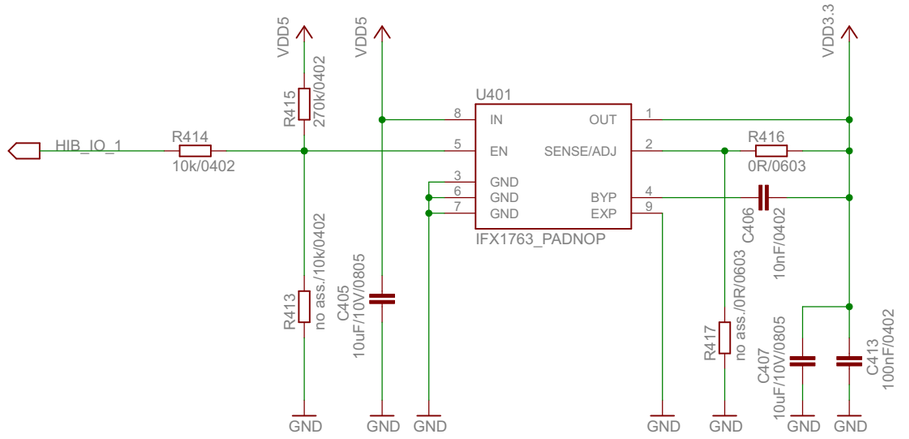

RTC Battery

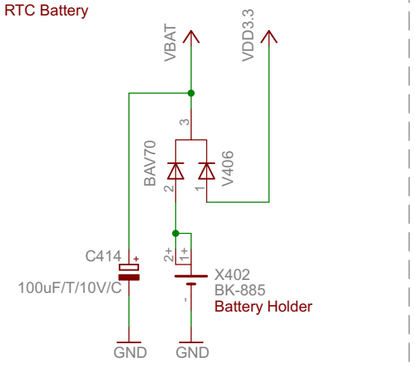

Reset

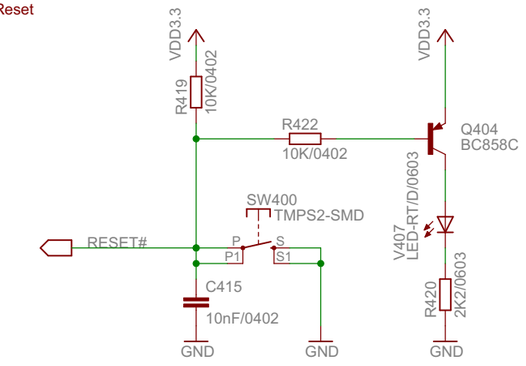

SDRAM

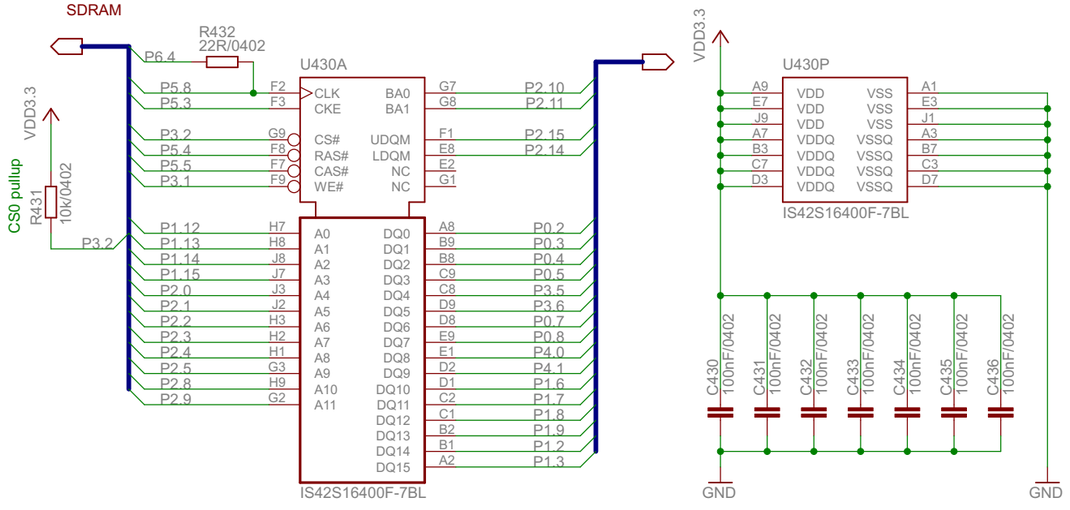

Push Buttons

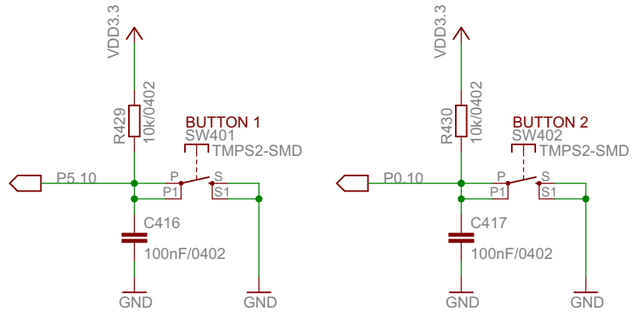

Power LED and Testpoints

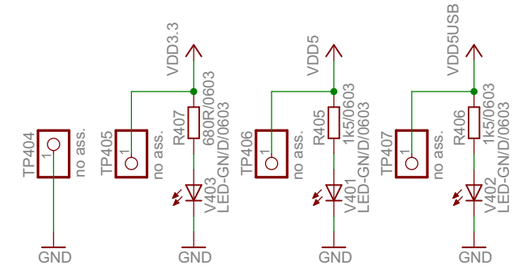

V1 / 04.04.2012 / Ma

Legal Disclaimer

The information given in this document shall in no event be regarded as a guarantee of conditions or characteristics. With respect to any examples or hints given herein, any typical values stated herein and/or any information regarding the application of the device, Infineon Technologies hereby disclaims any and all warranties and liabilities of any kind, including without limitation, warranties of non-infringement of intellectual property rights of any third party.

Power, Debug, Reset, SDRAM	
CPU_45B-V1	
20.02.2013 08:40:35	
Sheet: 4/5	

On-board Debugger Concept

TMS, TCK	SPI Master	U0C0
	MISO	DX0B-P1.4
	MOSI	DOUT0-P1.5
	CLK_OUT	SCLKOUT-P1.1
	CS_OUT	SELO0-P1.0
	SPI Slave	U0C1
	CS_IN	DX2A-P2.3
	CLK_IN	DX1A-P2.4
TDI	MISO	DOUT0-P2.5
TDO	MOSI	DX0A-P2.2
SWV	UART	U1C1
	RXD	DX0D-P0.0
	UART2 (DM2)	U1C0
RXD	RXD	DX0A-P0.4
TXD	TXD	DOUT0-P0.5
EN#	TXACTIVE#	GPIO-P0.6
RESET#	RESET#	GPIO-P0.3
DEBUG_LED#	DEBUG_LED#	GPIO-P0.2

On-board Debugger

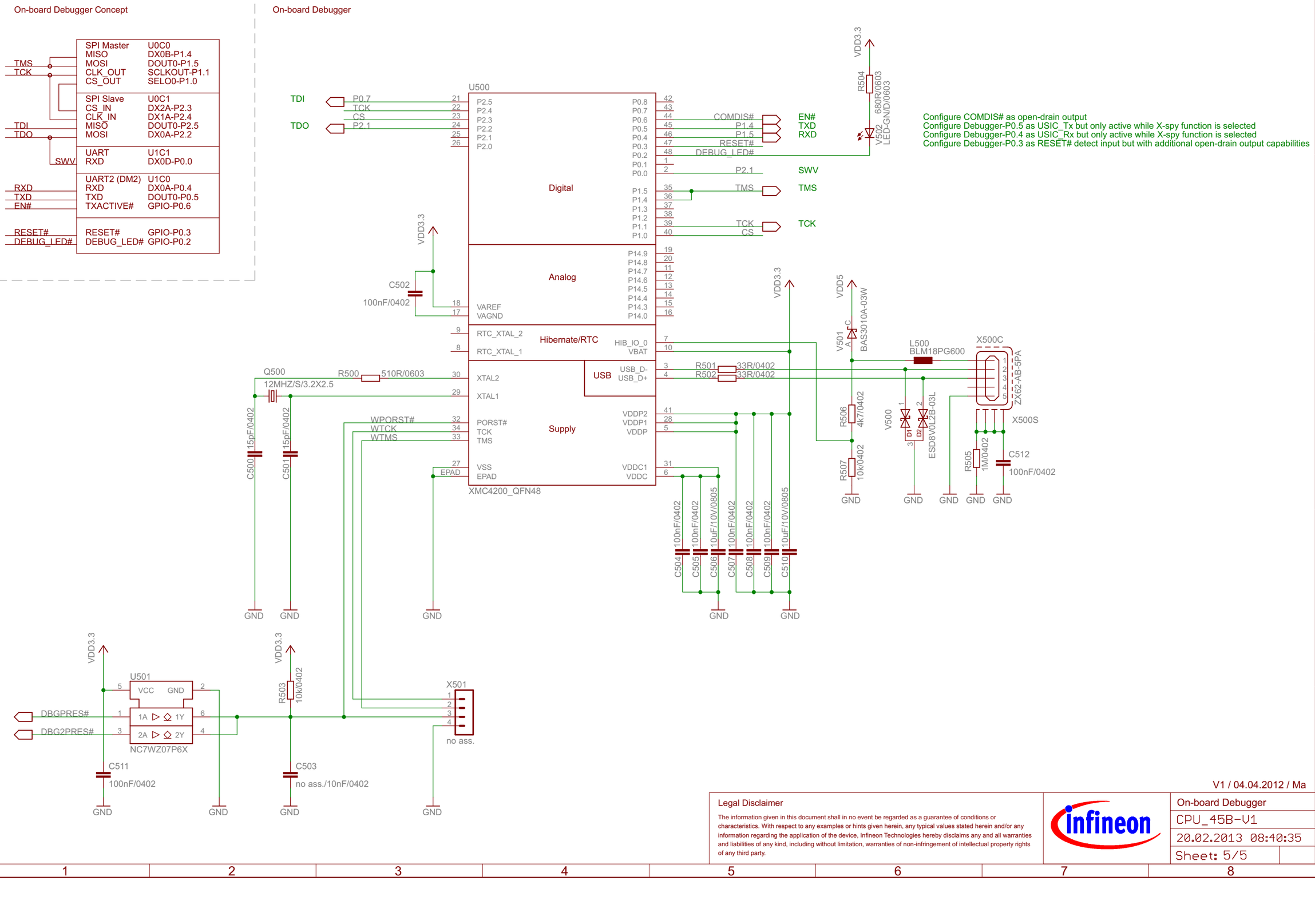

V1 / 04.04.2012 / Ma

Legal Disclaimer

The information given in this document shall in no event be regarded as a guarantee of conditions or characteristics. With respect to any examples or hints given herein, any typical values stated herein and/or any information regarding the application of the device, Infineon Technologies hereby disclaims any and all warranties and liabilities of any kind, including without limitation, warranties of non-infringement of intellectual property rights of any third party.

On-board Debugger	
CPU_45B-V1	
20.02.2013 08:40:35	
Sheet: 5/5	