XMC4000 Application Kit
CPU Board XMC4500 General Purpose

CPU_45A-V3

[1] Contents
[2] Satellite Connectors, USB-OTG
[3] XMC4500 (LQFP144)
[4] Power, Debug, Reset
[5] On-board Debugger

Fiducials

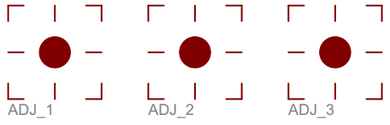

V3 / 01.02.2012 / Ma
V3-2 / 05.11.2013 / Ma
V3-3 / 20.03.2014 / Ma

Legal Disclaimer

The information given in this document shall in no event be regarded as a guarantee of conditions or characteristics. With respect to any examples or hints given herein, any typical values stated herein and/or any information regarding the application of the device, Infineon Technologies hereby disclaims any and all warranties and liabilities of any kind, including without limitation, warranties of non-infringement of intellectual property rights of any third party.

Contents
CPU_45A-V3-3
21.03.2014 14:25:48
Sheet: 1/5

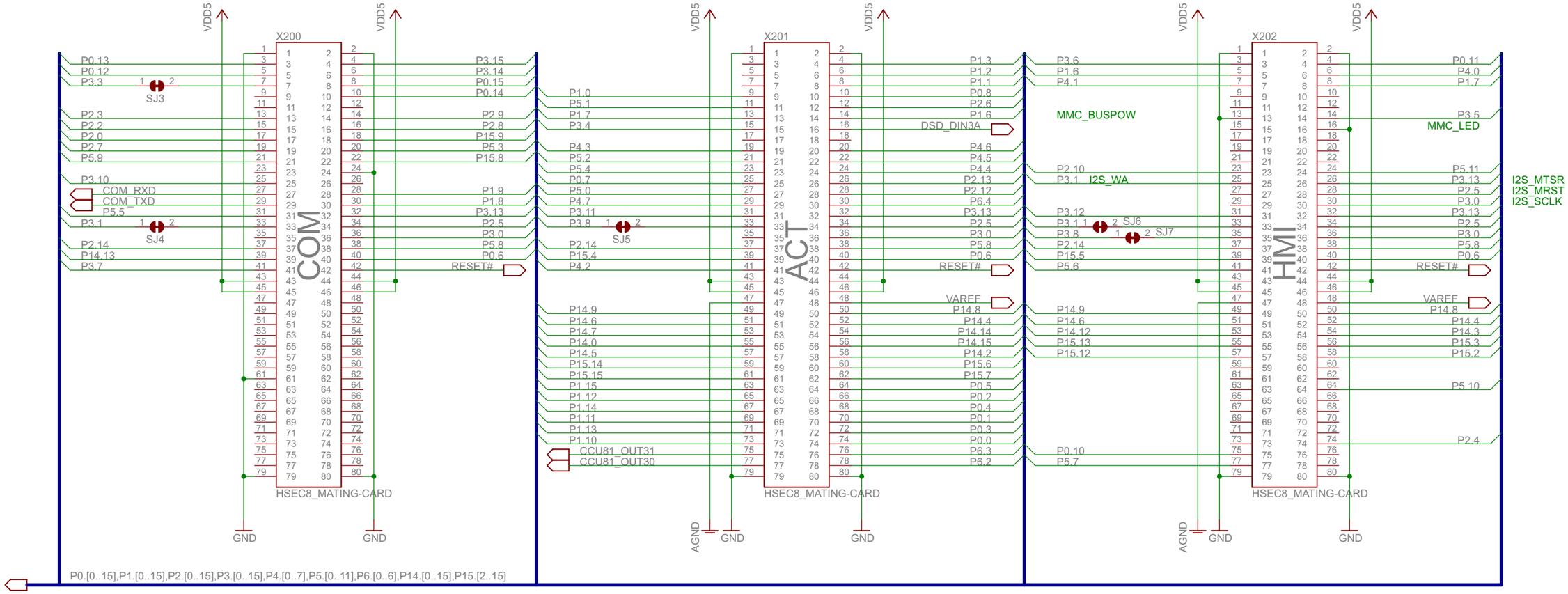
X200
COM
HSEC8_MATING-CARD
P0.13
P0.12
P3.3
SJ3
P2.3
P2.2
P2.0
P2.7
P5.9
P3.10
COM_RXD
COM_TXD
P5.5
P3.1
SJ4
P2.14
P14.13
P3.7
P3.15
P3.14
P0.15
P0.14
P2.9
P2.8
P15.9
P5.3
P15.8
P1.9
P1.8
P3.13
P2.5
P3.0
P5.8
P0.6
RESET#
X201
ACT
P1.0
P5.1
P1.7
P3.4
P4.3
P5.2
P5.4
P0.7
P5.0
P4.7
P3.11
P3.8
SJ5
P2.14
P15.4
P4.2
P14.9
P14.6
P14.7
P14.0
P14.5
P15.14
P15.15
P1.15
P1.12
P1.14
P1.11
P1.13
P1.10
CCU81_OUT31
CCU81_OUT30
P1.3
P1.2
P1.1
P0.8
P2.6
P1.6
DSD_DIN3A
P4.6
P4.5
P4.4
P2.13
P2.12
P6.4
P3.13
P2.5
P3.0
P5.8
P0.6
RESET#
VAREF
P14.8
P14.4
P14.14
P14.15
P14.2
P15.6
P15.7
P0.5
P0.2
P0.4
P0.1
P0.3
P0.0
P6.3
P6.2
X202
HMI
P3.6
P1.6
P4.1
MMC_BUSPOW
P2.10
P3.1
I2S_WA
P3.12
P3.1
SJ6
P3.8
SJ7
P2.14
P15.5
P5.6
P14.9
P14.6
P14.12
P15.13
P15.12
P0.10
P5.7
P0.11
P4.0
P1.7
P3.5
MMC_LED
P5.11
P3.13
P2.5
P3.0
P3.13
P2.5
P3.0
P5.8
P0.6
RESET#
VAREF
P14.8
P14.4
P14.3
P15.3
P15.2
P5.10
P2.4
I2S_MTSR
I2S_MRST
I2S_SCLK
VDD5
GND
AGND
P0.[0..15],P1.[0..15],P2.[0..15],P3.[0..15],P4.[0..7],P5.[0..11],P6.[0..6],P14.[0..15],P15.[2..15]
C201
C202
C205
C206
C209
C210
100nF/0402
USB-OTG Connector
VDD5USB
VDD3.3
X203C
ZX62-AB-5PA
L201
BLM18PG600
R204
10k/0402
OTG_FS_DM
OTG_FS_DP
P0.9
R202 33R/0402
R203 33R/0402
X203S
V201
ESD8V0L2B-03L
C200
100nF/0402
R200
1M/0402
V3 / 01.02.2012 / Ma
Legal Disclaimer
The information given in this document shall in no event be regarded as a guarantee of conditions or characteristics. With respect to any examples or hints given herein, any typical values stated herein and/or any information regarding the application of the device, Infineon Technologies hereby disclaims any and all warranties and liabilities of any kind, including without limitation, warranties of non-infringement of intellectual property rights of any third party.
Satellite Conn., USB-OTG
CPU_45A-V3-3
21.03.2014 14:25:48
Sheet: 2/5

Potentiometer, GPIO LED, I2C Pullups

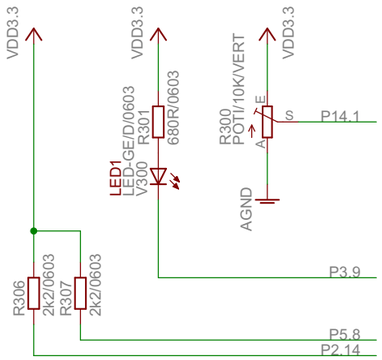

qSPI FLASH

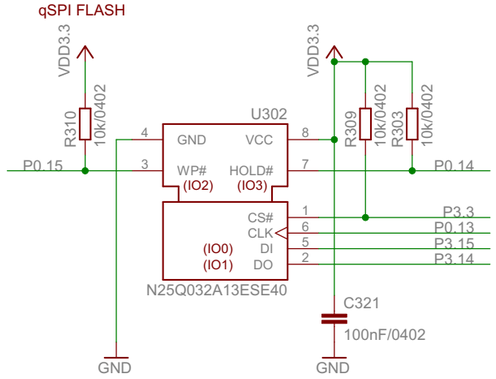

CPU

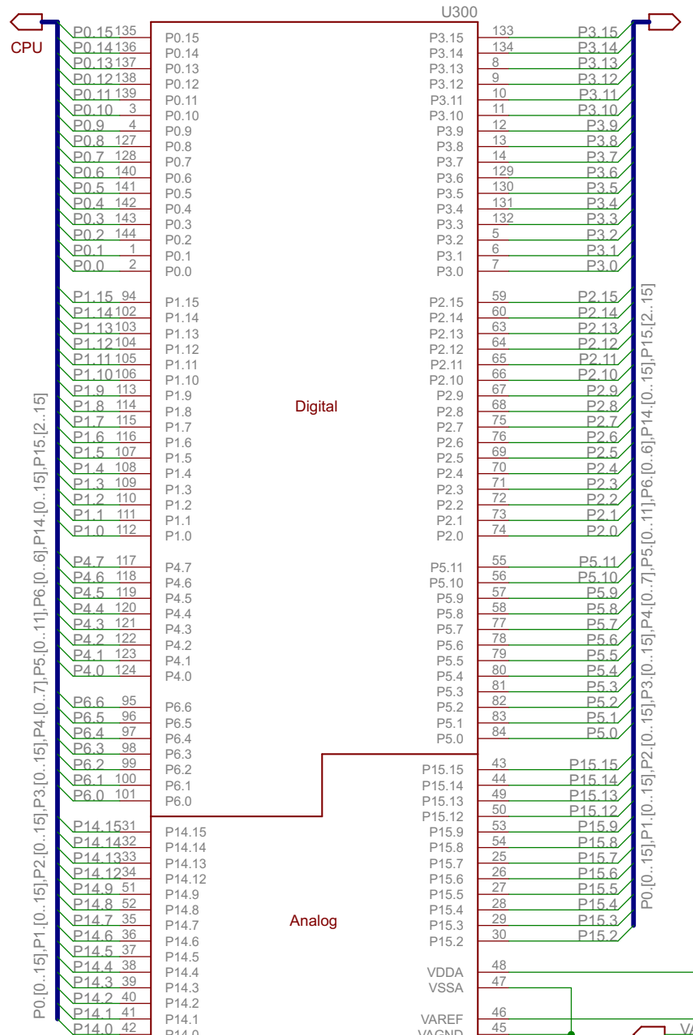

Boot Options

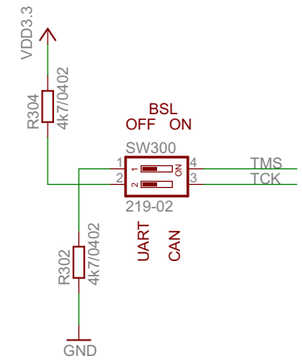

COM Board Switch

	UART USIC0CH0	CAN Node1
P1.4	USIC_RxD	CAN_RxD
P1.5	USIC_TxD	CAN_TxD

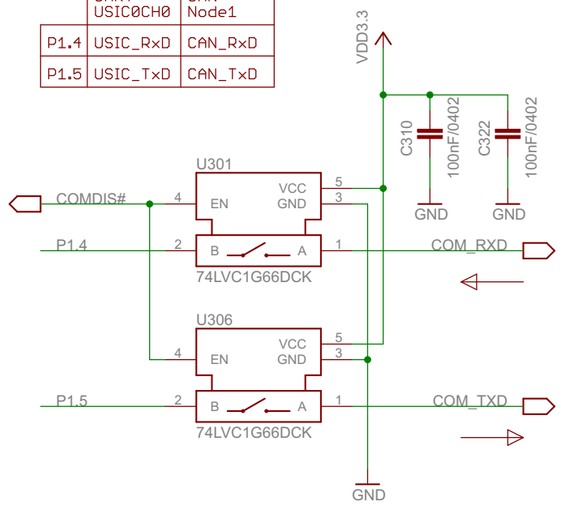

Trace Signal / ACT Board Switch

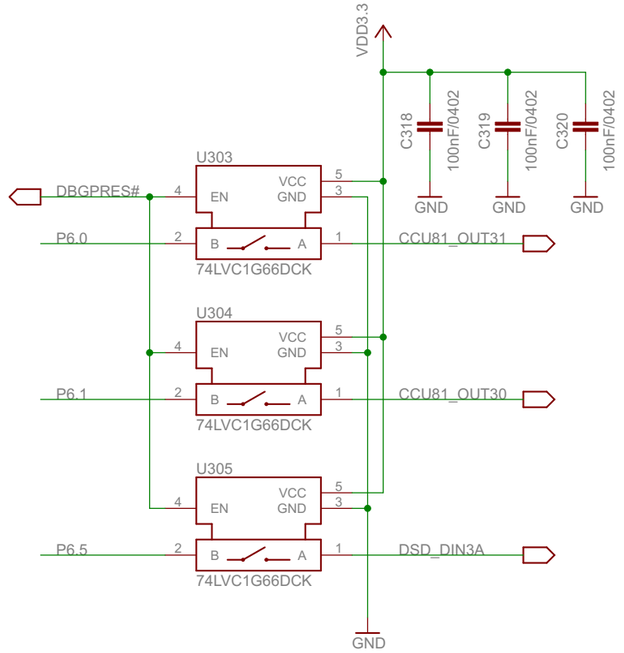

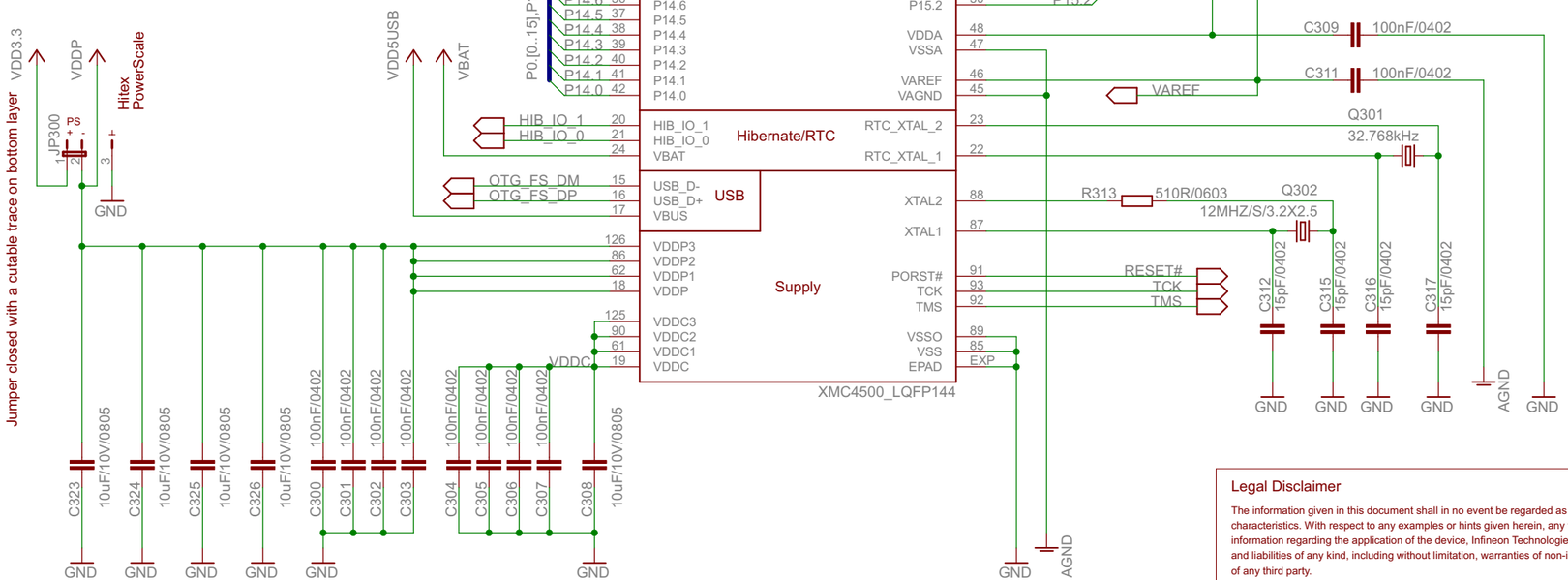

V3 / 01.02.2012 / Ma

Legal Disclaimer

The information given in this document shall in no event be regarded as a guarantee of conditions or characteristics. With respect to any examples or hints given herein, any typical values stated herein and/or any information regarding the application of the device, Infineon Technologies hereby disclaims any and all warranties and liabilities of any kind, including without limitation, warranties of non-infringement of intellectual property rights of any third party.

CPU	
CPU_45A-V3-3	
21.03.2014 14:25:48	
Sheet: 3/5	

Debug Connectors

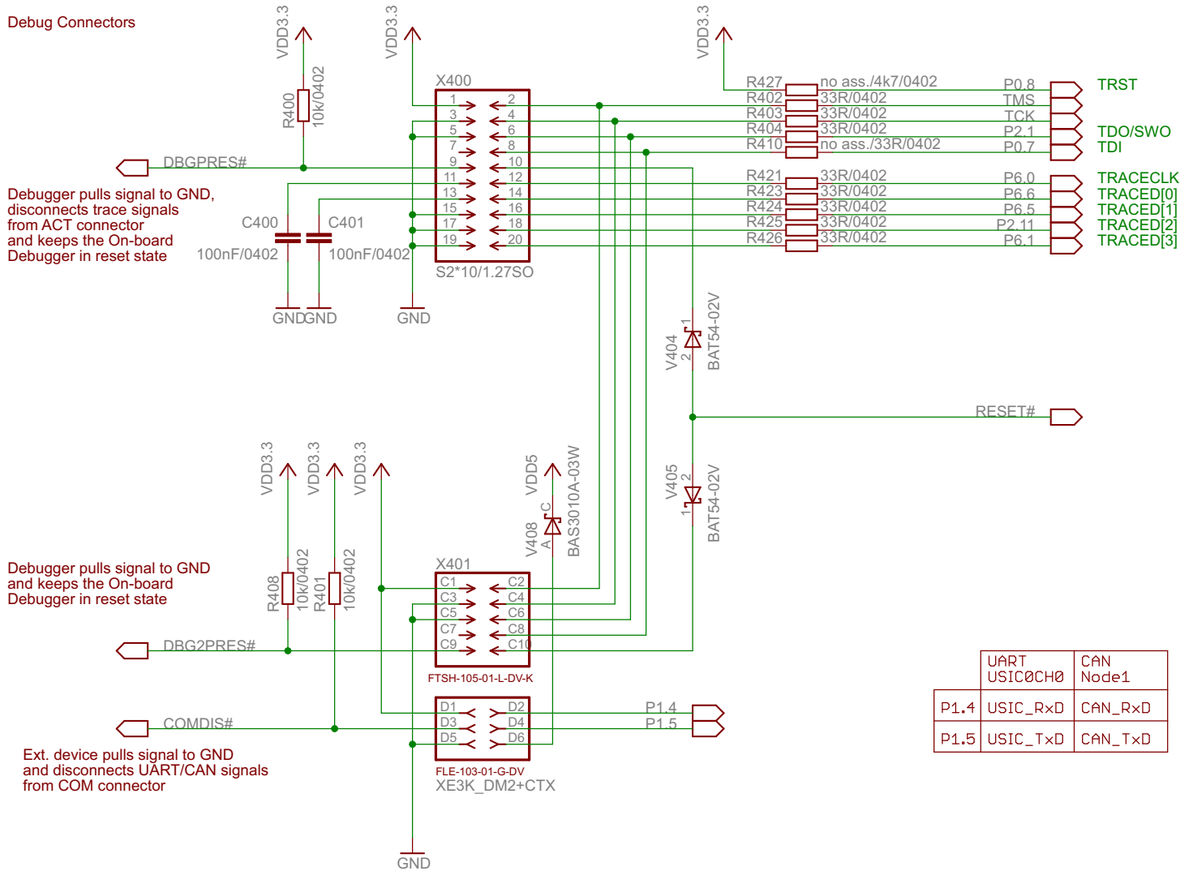

	UART USIC0CH0	CAN Node1
P1.4	USIC_RxD	CAN_RxD
P1.5	USIC_TxD	CAN_TxD

VDD3.3 Supply

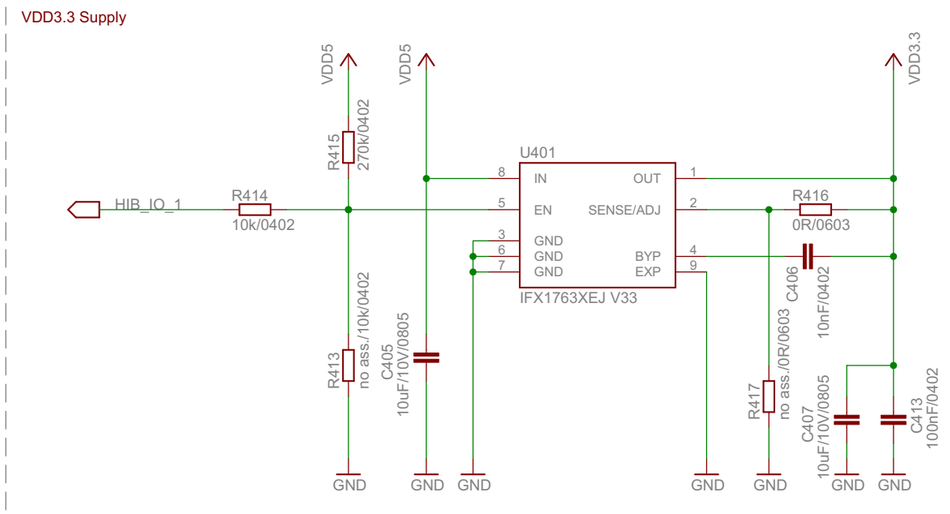

RTC Battery

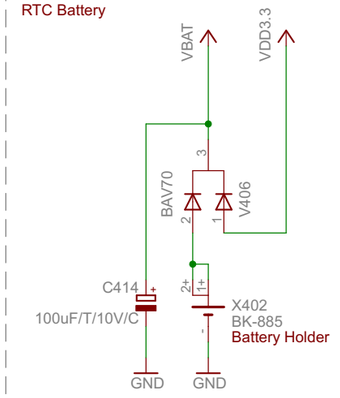

Reset

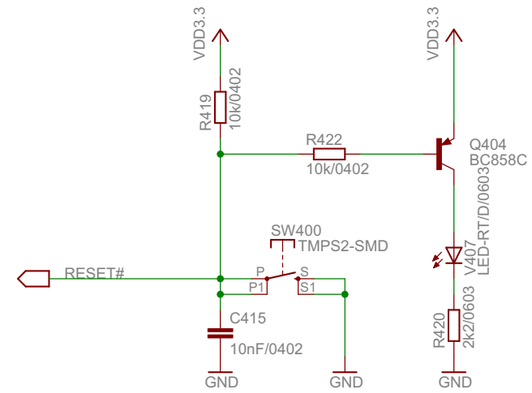

USB-OTG Supply

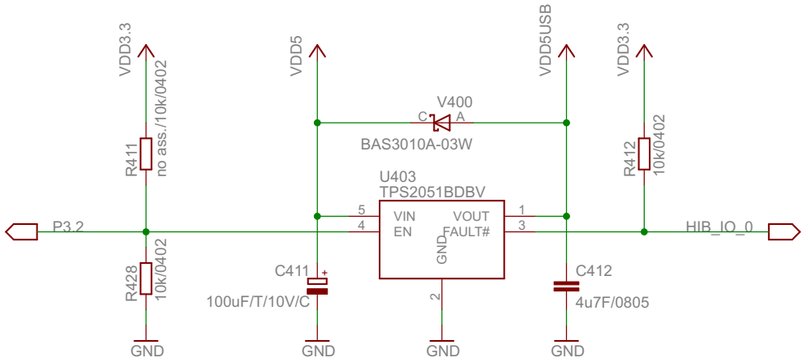

Push Button

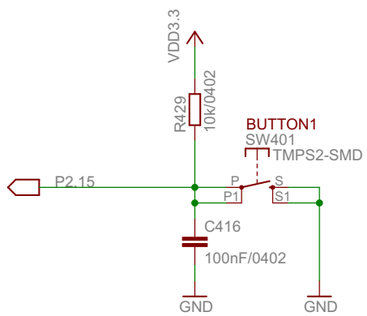

Power LED and Testpoints

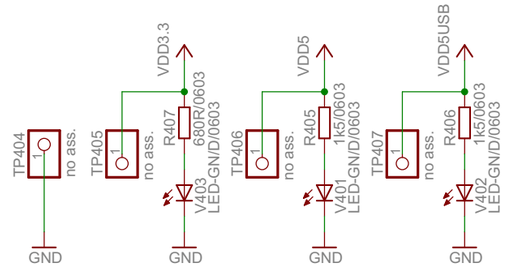

V3 / 01.02.2012 / Ma
V3-3 / 20.03.2014 / Ma

Legal Disclaimer

The information given in this document shall in no event be regarded as a guarantee of conditions or characteristics. With respect to any examples or hints given herein, any typical values stated herein and/or any information regarding the application of the device, Infineon Technologies hereby disclaims any and all warranties and liabilities of any kind, including without limitation, warranties of non-infringement of intellectual property rights of any third party.

Power, Debug, Reset	
CPU_45A-V3-3	
21.03.2014 14:25:48	
Sheet: 4/5	

On-board Debugger Concept

TMS	SPI Master	U0C0
TCK	MISO	DX0B-P1.4
	MOSI	DOUT0-P1.5
	CLK_OUT	SCLKOUT-P1.1
	CS_OUT	SELO0-P1.0
	SPI Slave	U0C1
	CS_IN	DX2A-P2.3
	CLK_IN	DX1A-P2.4
TDI	MISO	DOUT0-P2.5
TDO	MOSI	DX0A-P2.2
	UART	U1C1
SWV	RXD	DX0D-P0.0
	UART2 (DM2)	U1C0
RXD	RXD	DX0A-P0.4
TXD	TXD	DOUT0-P0.5
EN#	TXACTIVE#	GPIO-P0.6
RESET#	RESET#	GPIO-P0.3
DEBUG_LED#	DEBUG_LED#	GPIO-P0.2

On-board Debugger

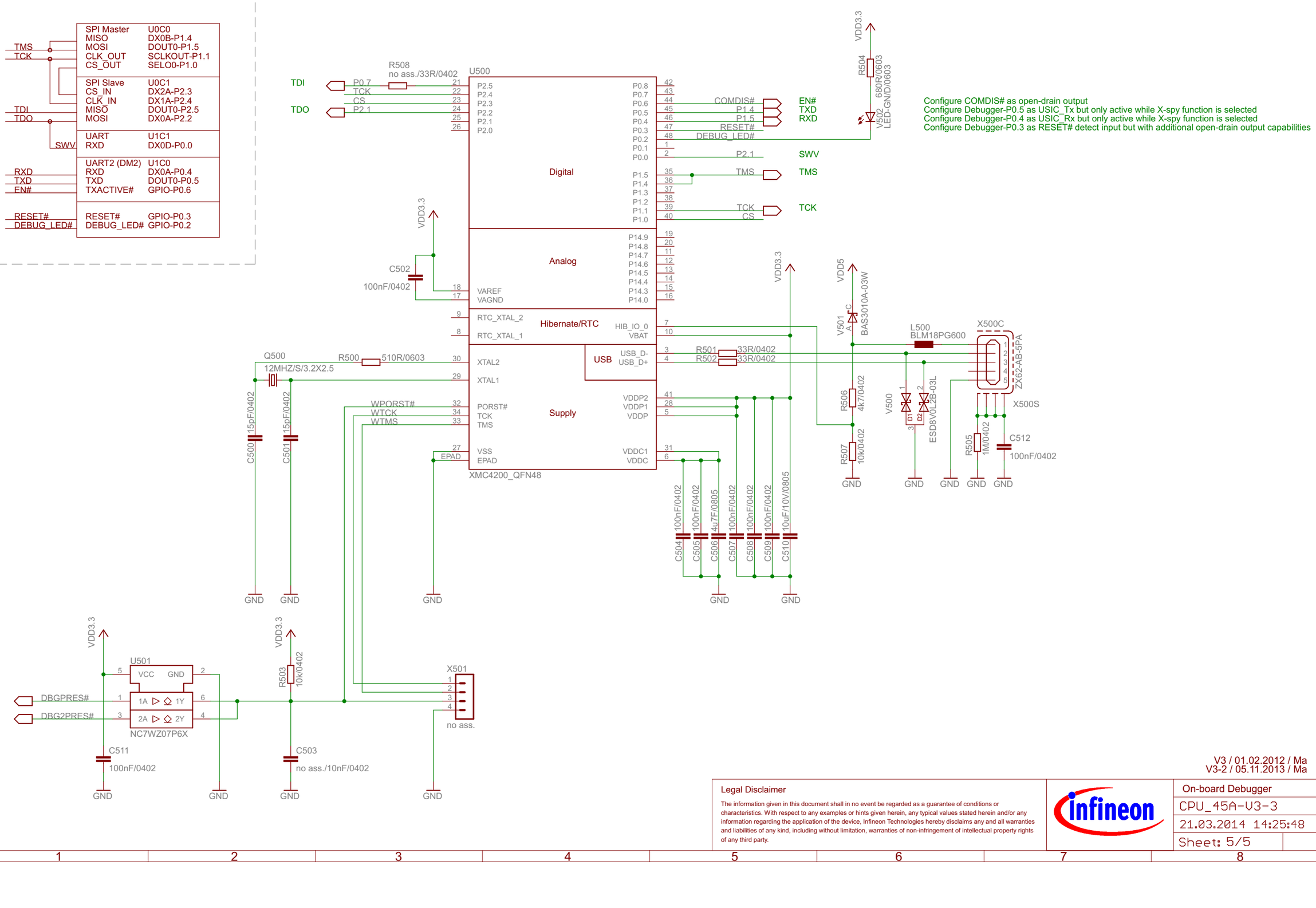

Configure COMDIS# as open-drain output
Configure Debugger-P0.5 as USIC_Tx but only active while X-spy function is selected
Configure Debugger-P0.4 as USIC_Rx but only active while X-spy function is selected
Configure Debugger-P0.3 as RESET# detect input but with additional open-drain output capabilities

V3 / 01.02.2012 / Ma
V3-2 / 05.11.2013 / Ma

Legal Disclaimer

The information given in this document shall in no event be regarded as a guarantee of conditions or characteristics. With respect to any examples or hints given herein, any typical values stated herein and/or any information regarding the application of the device, Infineon Technologies hereby disclaims any and all warranties and liabilities of any kind, including without limitation, warranties of non-infringement of intellectual property rights of any third party.

On-board Debugger	
CPU_45A-V3-3	
21.03.2014 14:25:48	
Sheet: 5/5	