Hexagon Application Kit
CPU Board XMC4500 General Purpose

CPU_45A-V2

[1] Contents
[2] Satellite Connectors, USB-OTG
[3] XMC4500 (LQFP144)
[4] Power, Debug

Fiducials

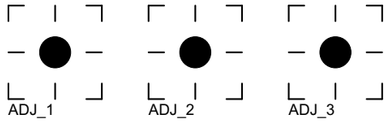

This document may not be passed on, duplicated or its contents utilized, unless expressly permitted. Violating this stipulation will result in the liability to pay damages. All rights reserved in case of a patent registration or registered design.

09.11.2011 / Ma

hitex DEVELOPMENT TOOLS

Contents
CPU_45A-V2
20.03.2012 16:27:11
Sheet: 1/4

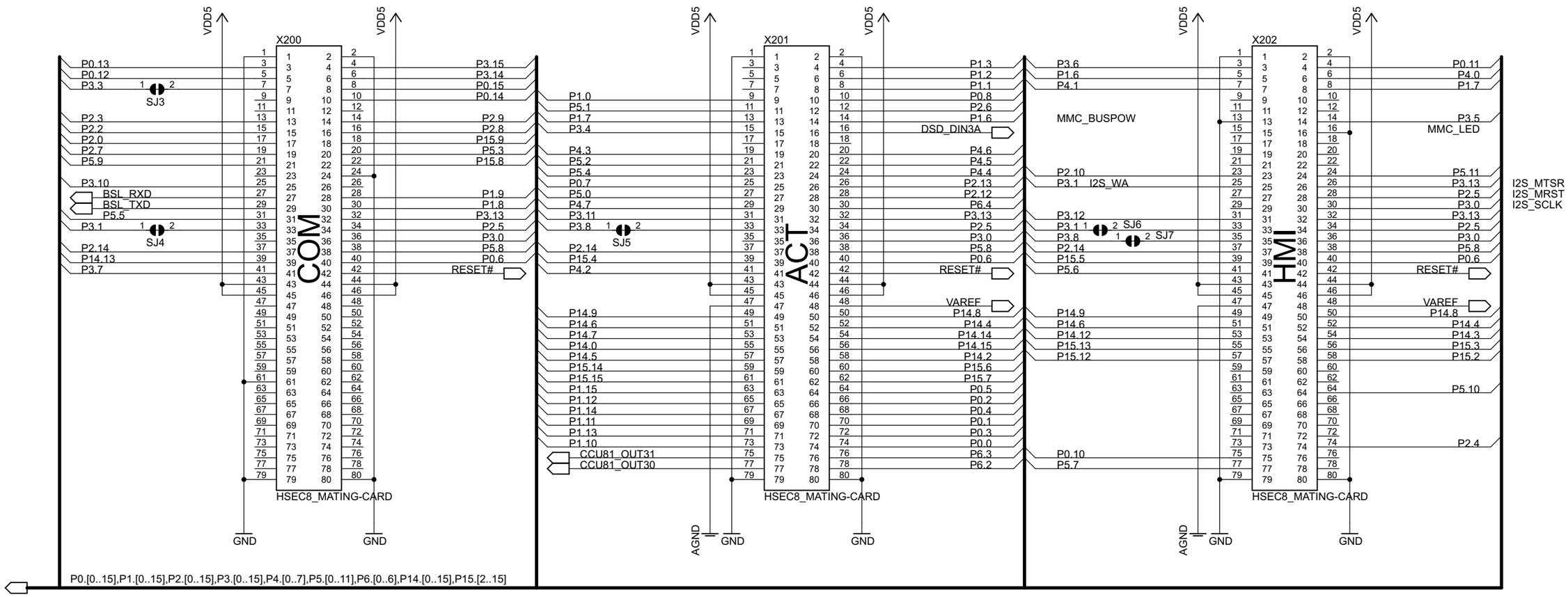

This document may not be passed on, duplicated or its contents utilized, unless expressly permitted. Violating this stipulation will result in the liability to pay damages. All rights reserved in case of a patent registration or registered design.

09.11.2011 / Ma

hitex DEVELOPMENT TOOLS

Satellite Con., USB-OTG	
CPU_45A-V2	
20.03.2012 16:27:11	
Sheet: 2/4	

Potentiometer, GPIO LED, I2C Pullups

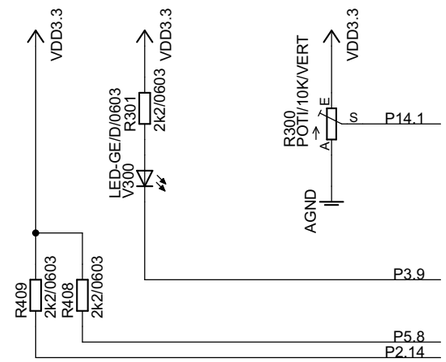

qSPI FLASH

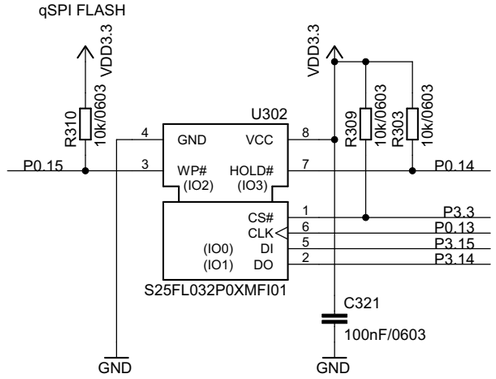

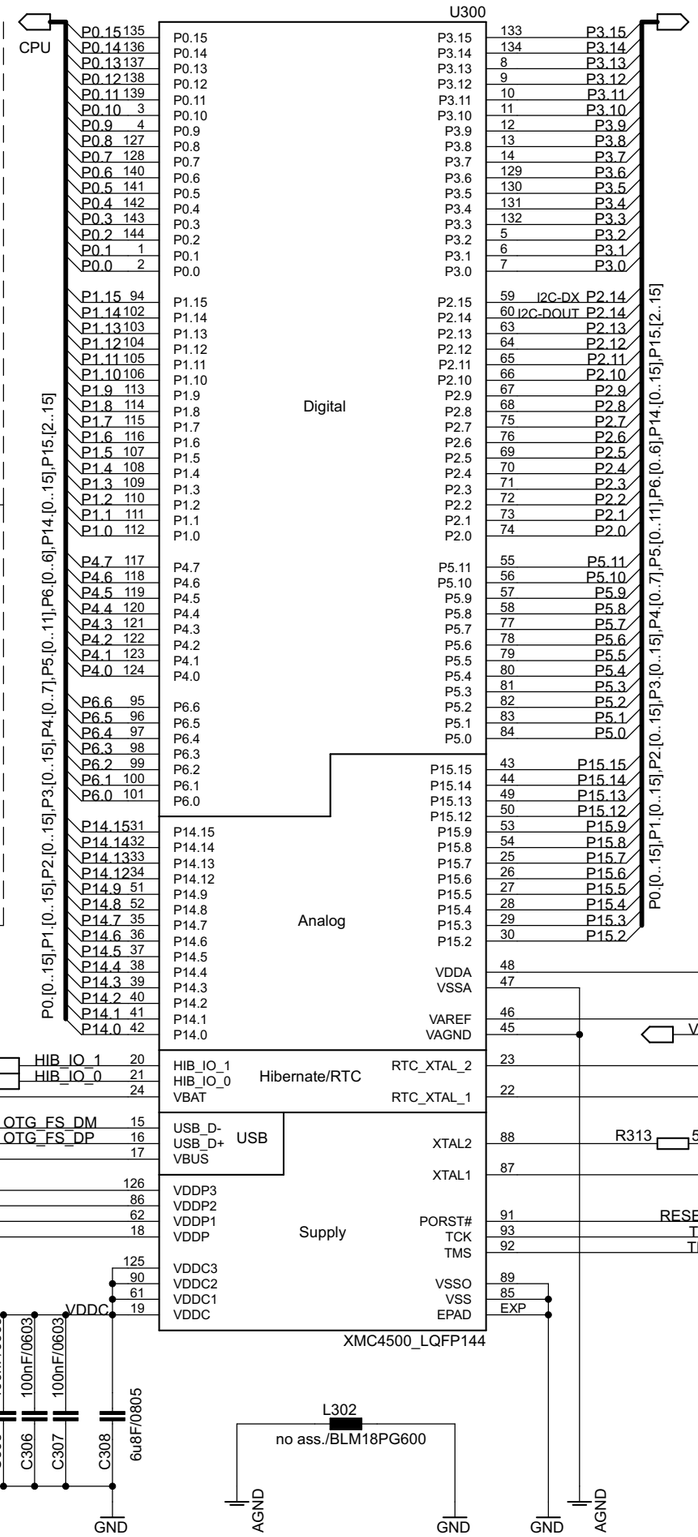

Boot Options

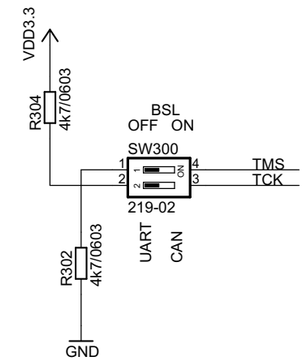

BSL DM2 / COM Board Switch

	UART USIC0CH0	CAN Node1
P1.4	USIC_RxD	CAN_RxD
P1.5	USIC_TxD	CAN_TxD

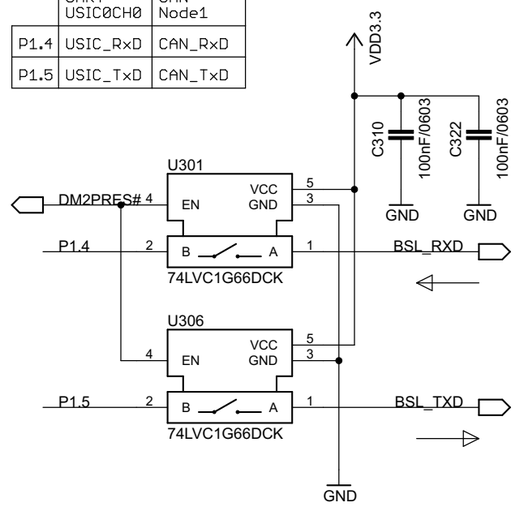

Trace Signal / ACT Board Switch

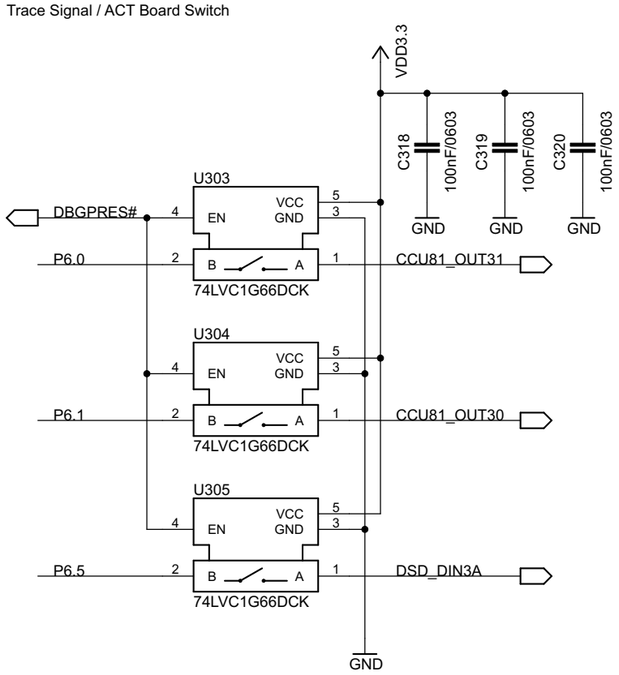

This document may not be passed on, duplicated or its contents utilized, unless expressly permitted. Violating this stipulation will result in the liability to pay damages. All rights reserved in case of a patent registration or registered design.

09.11.2011 / Ma

hitex DEVELOPMENT TOOLS

CPU	
CPU_45A-V2	
20.03.2012 16:27:11	
Sheet: 3/4	

Cortex Debug+ETM

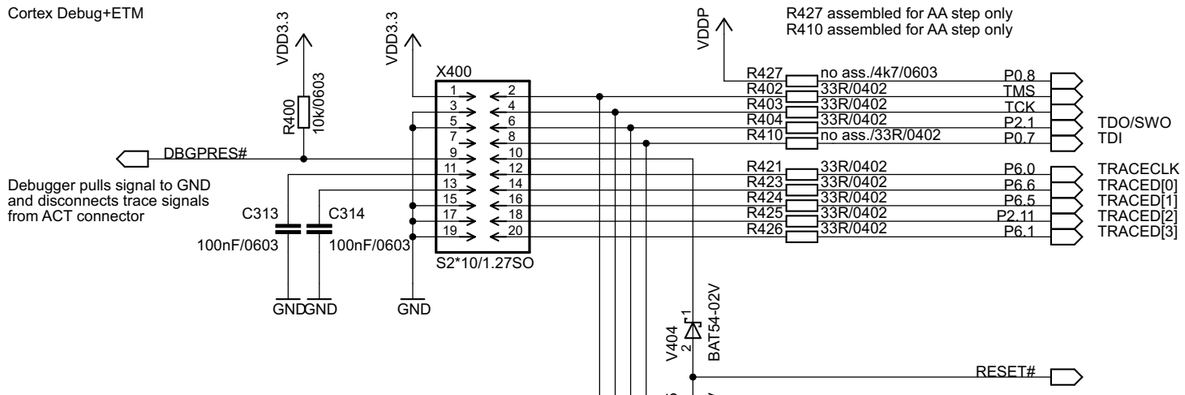

Cortex Debug / DM2 Connector

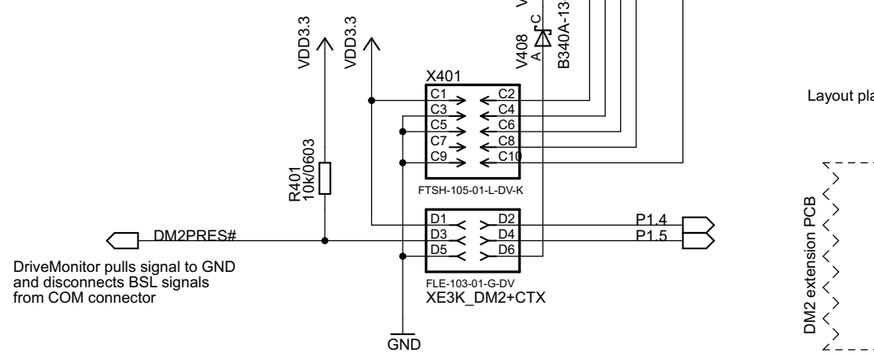

	UART USIC0CH0	CAN Node1
P1.4	USIC_RxD	CAN_RxD
P1.5	USIC_TxD	CAN_TxD

Layout placement

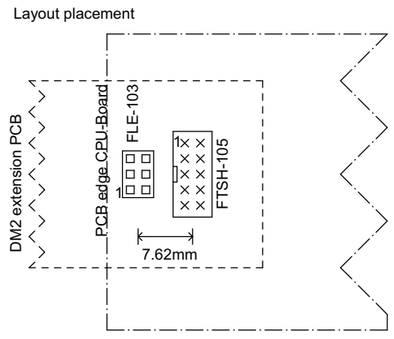

The DriveMonitor extension PCB hosts the CAN transceiver and the UART switch logic connected to X401

VDD3.3 Supply

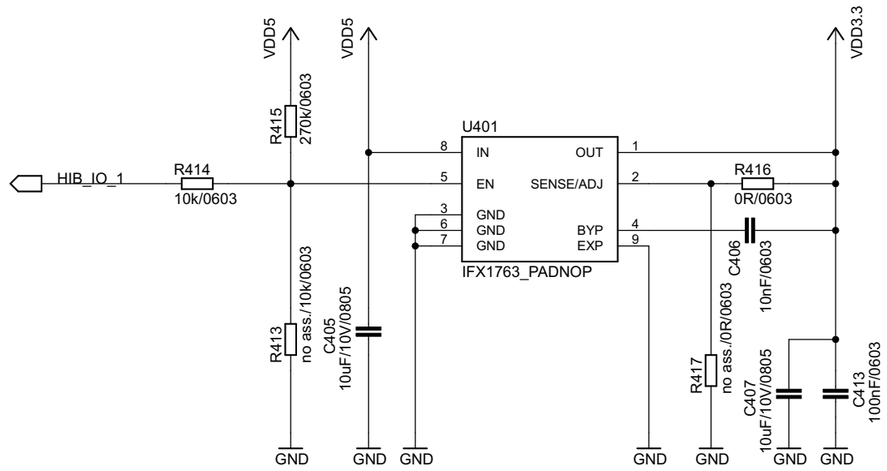

RTC Battery

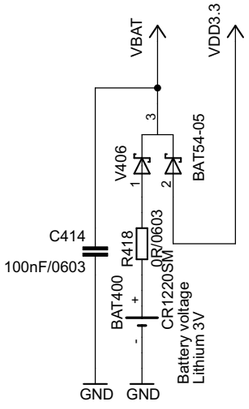

Reset

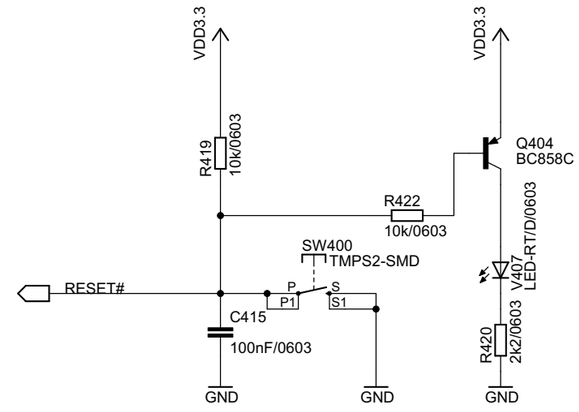

USB-OTG Supply

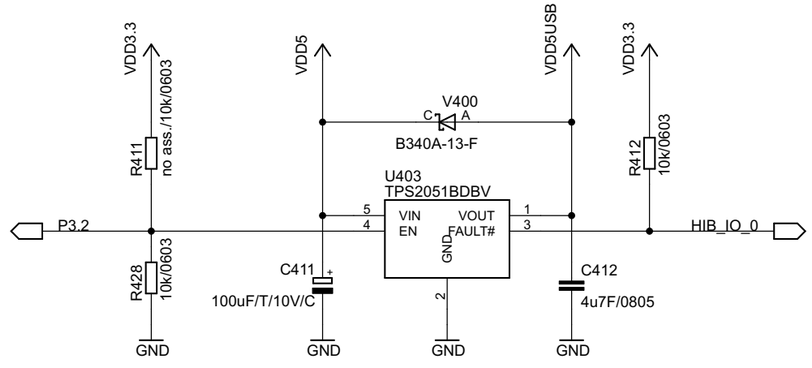

Power LED and Testpoints

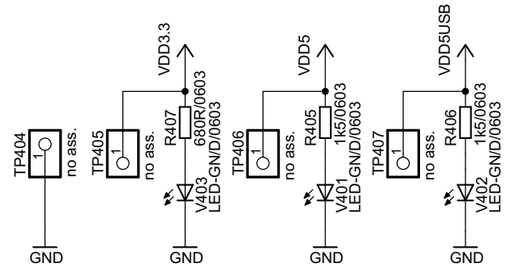

This document may not be passed on, duplicated or its contents utilized, unless expressly permitted. Violating this stipulation will result in the liability to pay damages. All rights reserved in case of a patent registration or registered design.

09.11.2011 / Ma	Power, Debug
hitex DEVELOPMENT TOOLS	CPU_45A-V2
	20.03.2012 16:27:11
	Sheet: 4/4