Hexagon Application Kit
CPU Board XMC4200 Actuator

CPU_42A-V1

[1] Contents
[2] Satellite Connector, USB, CAN
[3] XMC4200 (QFN48)
[4] Power, Debug, Reset
[5] On-board Debugger

Fiducials

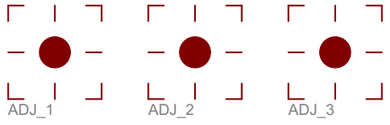

V1 / 30.11.2012 / Ma

Legal Disclaimer

The information given in this document shall in no event be regarded as a guarantee of conditions or characteristics. With respect to any examples or hints given herein, any typical values stated herein and/or any information regarding the application of the device, Infineon Technologies hereby disclaims any and all warranties and liabilities of any kind, including without limitation, warranties of non-infringement of intellectual property rights of any third party.

Contents
CPU_42A-V1
05.02.2013 14:14:56
Sheet: 1/5

Satellite Connector

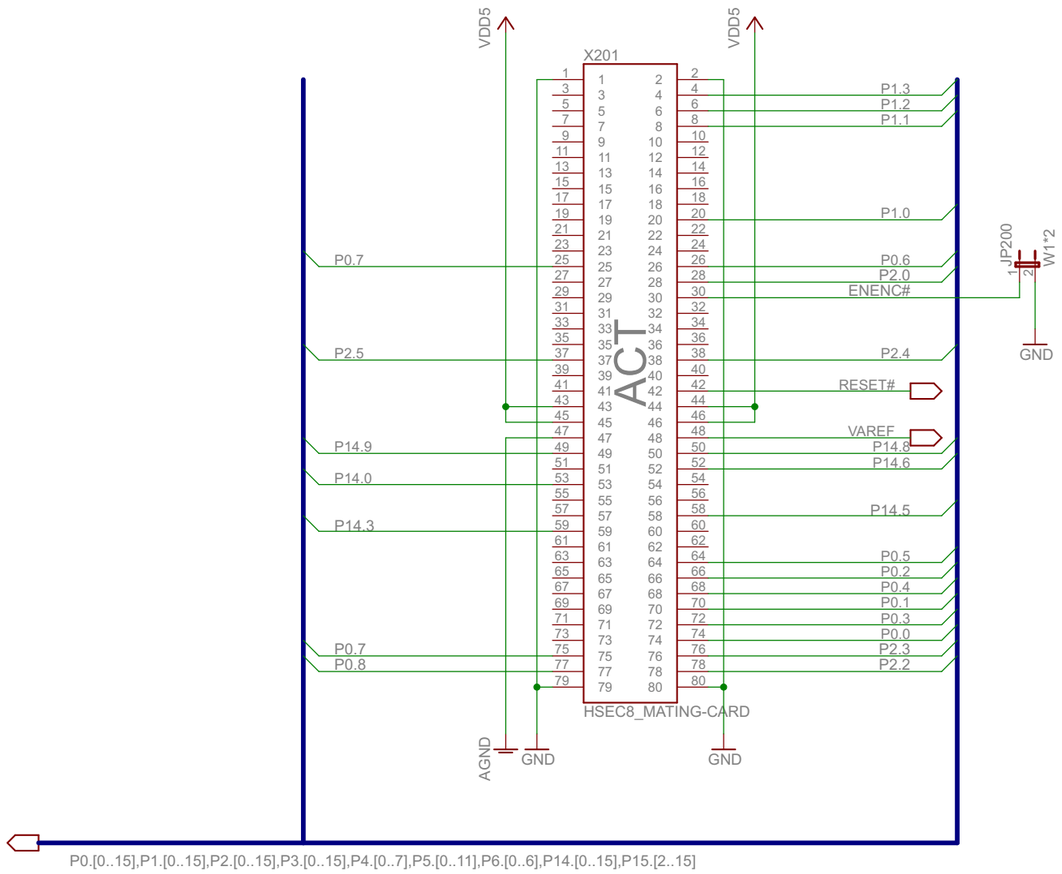

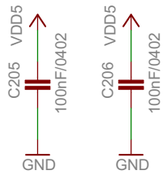

CAN Interface

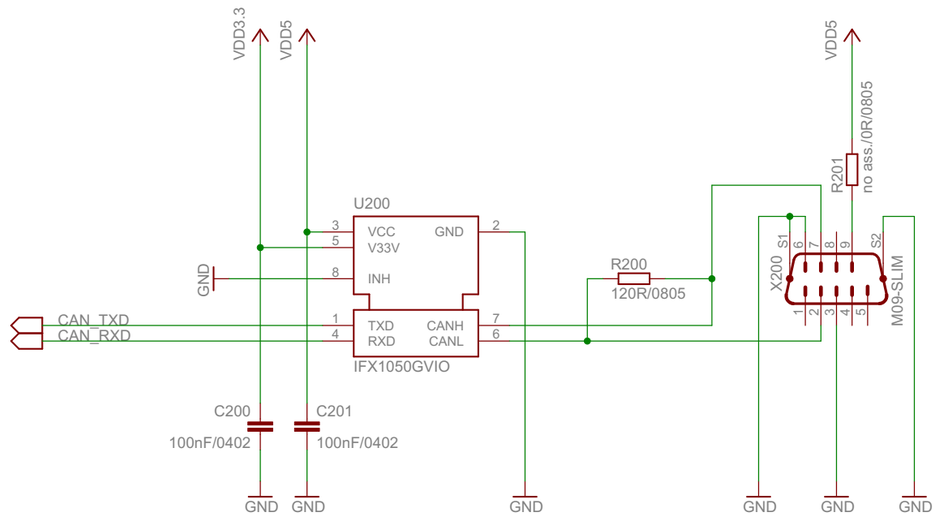

USB Connector

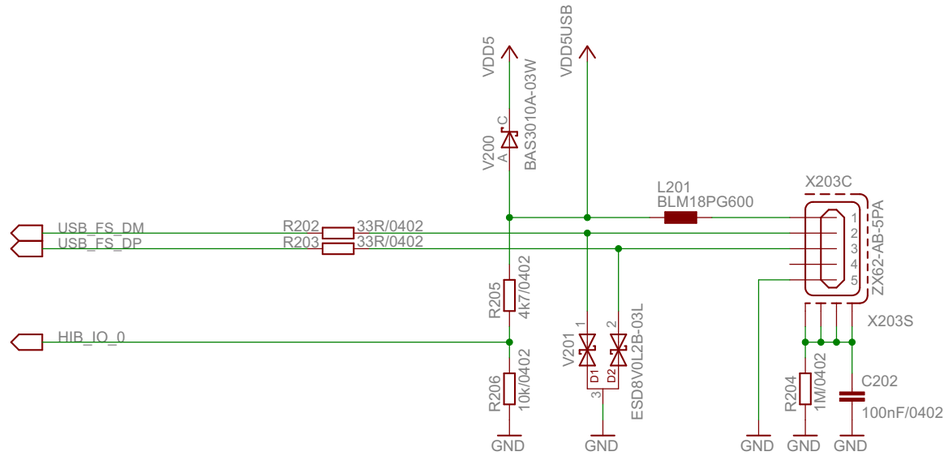

V1 / 30.11.2012 / Ma

Legal Disclaimer

The information given in this document shall in no event be regarded as a guarantee of conditions or characteristics. With respect to any examples or hints given herein, any typical values stated herein and/or any information regarding the application of the device, Infineon Technologies hereby disclaims any and all warranties and liabilities of any kind, including without limitation, warranties of non-infringement of intellectual property rights of any third party.

Sat.Conn., USB, CAN	
CPU_42A-V1	
05.02.2013 14:14:56	
Sheet: 2/5	

Potentiometer, GPIO LEDs, I2C Pullups

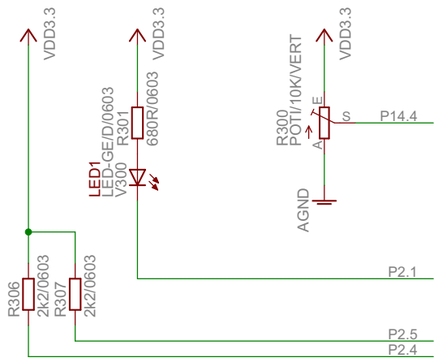

CPU

Boot Options

CAN Transciever Switch

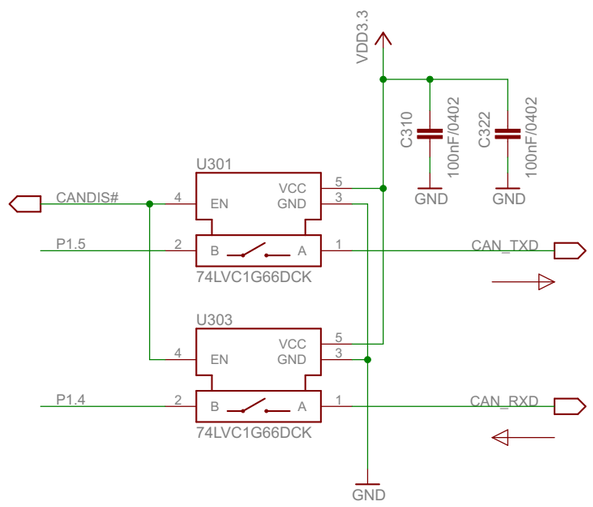

Push Buttons

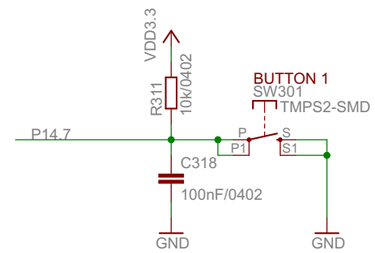

V1 / 30.11.2012 / Ma

Legal Disclaimer

The information given in this document shall in no event be regarded as a guarantee of conditions or characteristics. With respect to any examples or hints given herein, any typical values stated herein and/or any information regarding the application of the device, Infineon Technologies hereby disclaims any and all warranties and liabilities of any kind, including without limitation, warranties of non-infringement of intellectual property rights of any third party.

CPU	
CPU_42A-V1	
05.02.2013 14:14:56	
Sheet: 3/5	

Cortex Debug

Debugger pulls signal to GND
and keeps the on-board debugger
in reset state

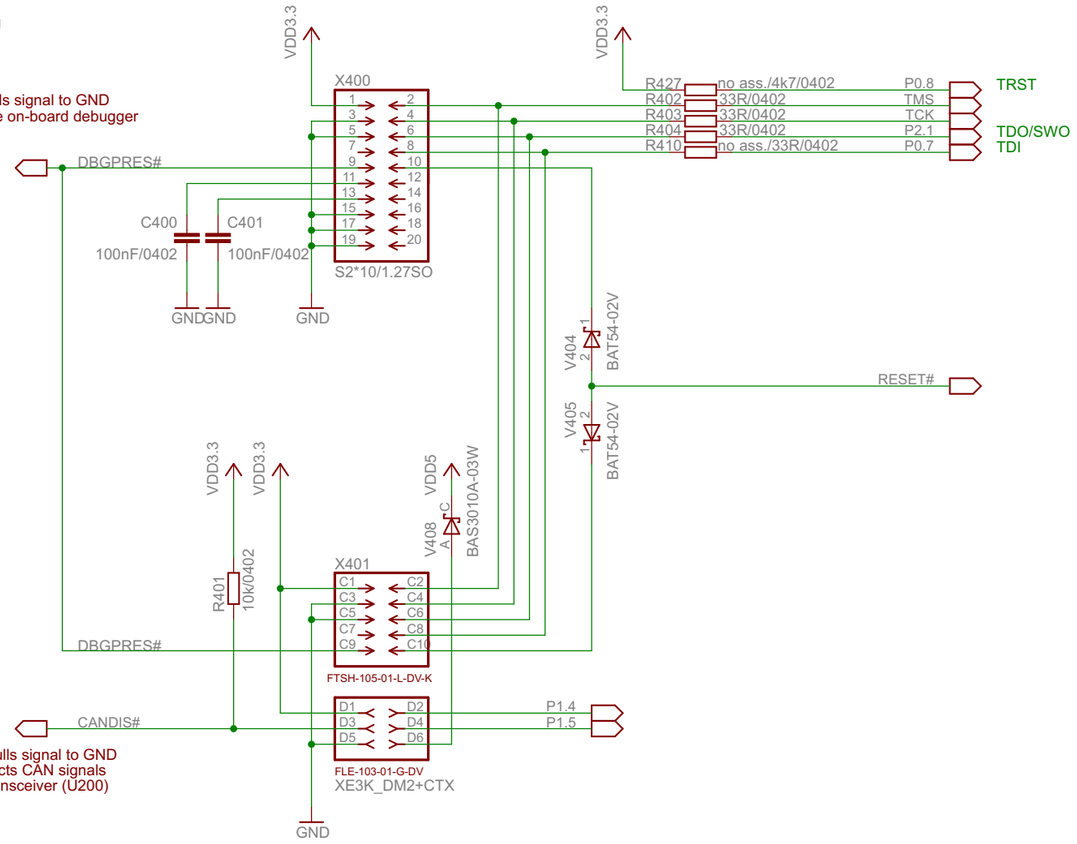

Ext. device pulls signal to GND
and disconnects CAN signals
from CAN Transceiver (U200)

	UART USIC0CH0	CAN Node1
P1.4	USIC_RxD	CAN_RxD
P1.5	USIC_TxD	CAN_TxD

VDD3.3 Supply

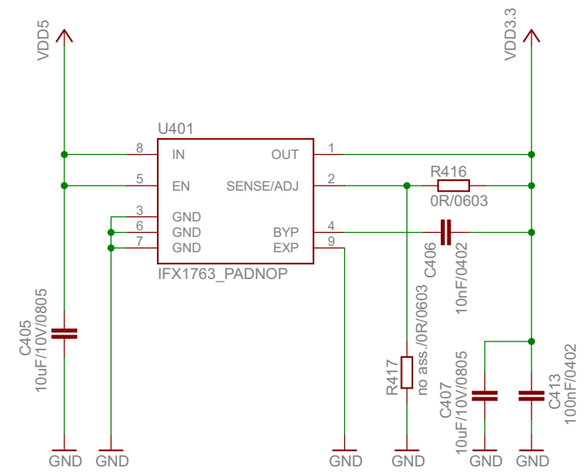

RTC Battery

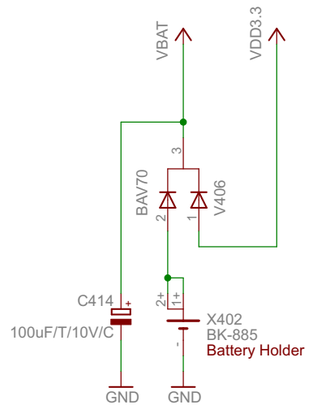

Reset

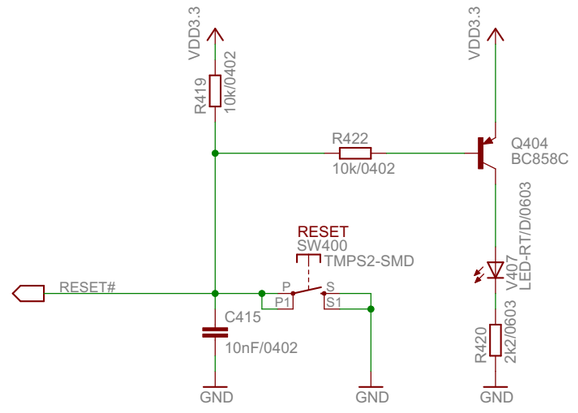

Power LED and Testpoints

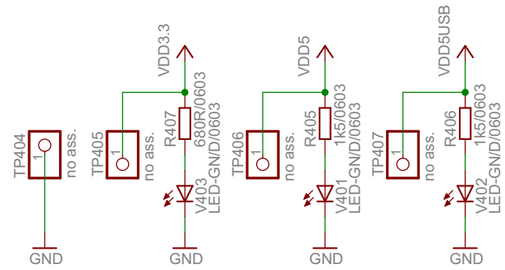

V1 / 30.11.2012 / Ma

Legal Disclaimer

The information given in this document shall in no event be regarded as a guarantee of conditions or characteristics. With respect to any examples or hints given herein, any typical values stated herein and/or any information regarding the application of the device, Infineon Technologies hereby disclaims any and all warranties and liabilities of any kind, including without limitation, warranties of non-infringement of intellectual property rights of any third party.

Power, Debug, Reset
CPU_42A-V1
05.02.2013 14:14:56
Sheet: 4/5

Debugger Concept

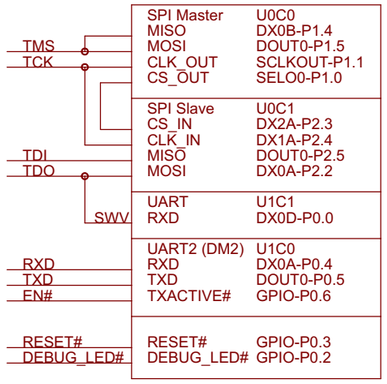

On-board Debugger

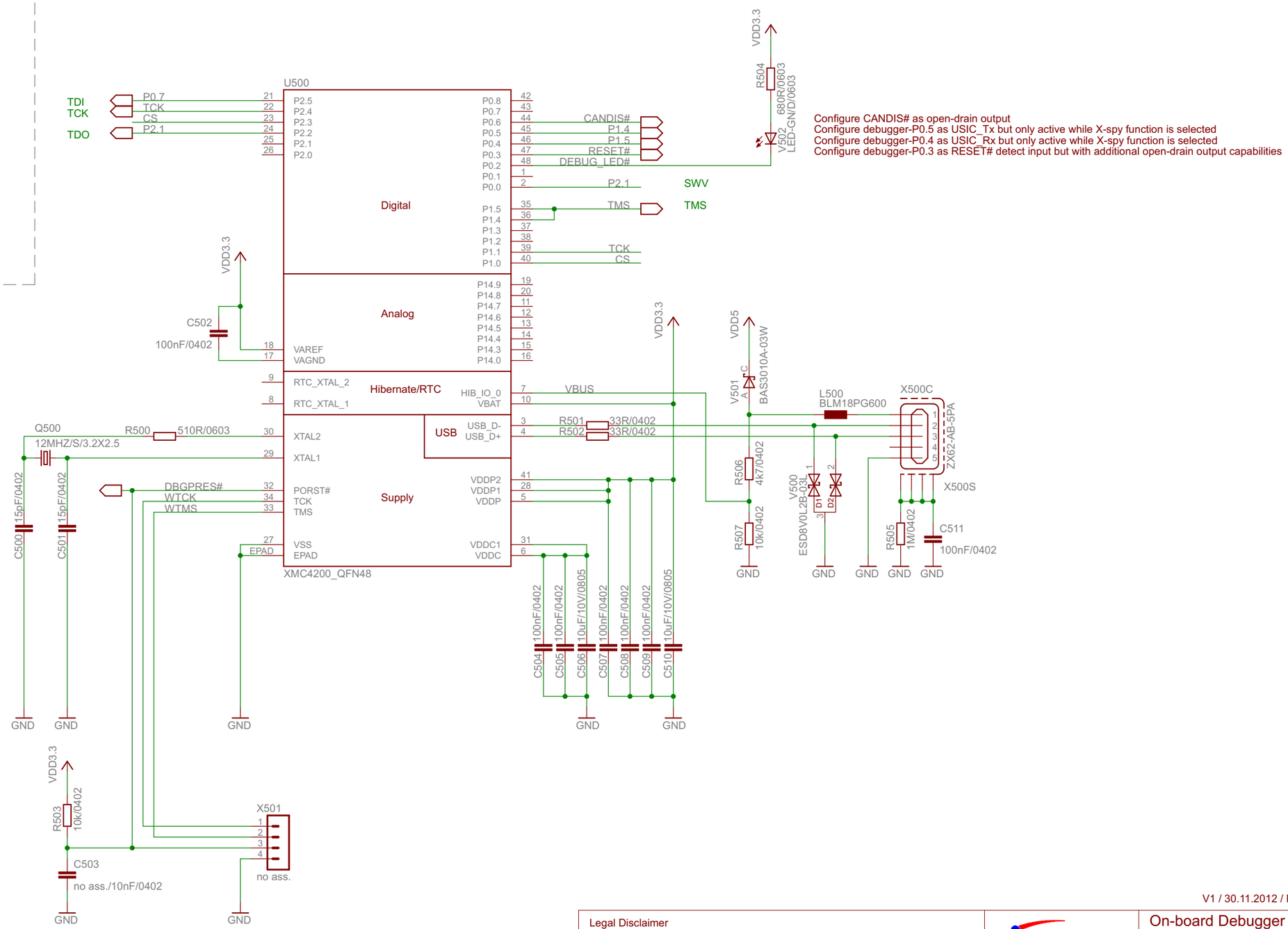

Configure CANDIS# as open-drain output
Configure debugger-P0.5 as USIC_Tx but only active while X-spy function is selected
Configure debugger-P0.4 as USIC_Rx but only active while X-spy function is selected
Configure debugger-P0.3 as RESET# detect input but with additional open-drain output capabilities

V1 / 30.11.2012 / Ma

Legal Disclaimer

The information given in this document shall in no event be regarded as a guarantee of conditions or characteristics. With respect to any examples or hints given herein, any typical values stated herein and/or any information regarding the application of the device, Infineon Technologies hereby disclaims any and all warranties and liabilities of any kind, including without limitation, warranties of non-infringement of intellectual property rights of any third party.

On-board Debugger	
CPU_42A-V1	
05.02.2013 14:14:56	
Sheet: 5/5	