Hexagon Application Kit
Automation I/O Card

AUT_ISO-V1

[1] Contents
[2] Satellite Connector, I2C-GPIO, Power
[3] ISOFACE

Fiducials

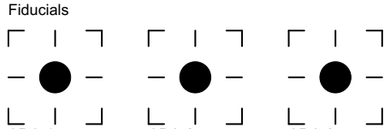

This document may not be passed on, duplicated or its contents utilized, unless expressly permitted. Violating this stipulation will result in the liability to pay damages. All rights reserved in case of a patent registration or registered design.

R2 / 26.08.2011 / Ma

hitex DEVELOPMENT TOOLS

Contents
AUT_ISO-V1
19.03.2012 10:48:45
Sheet: 1/3

ACT-BOARD CONNECTOR

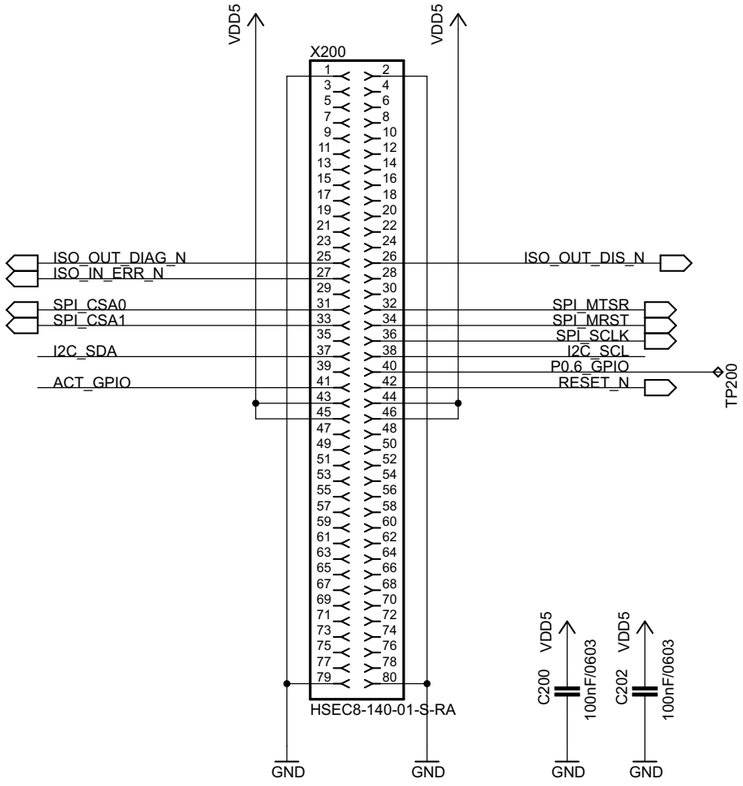

ISOLATED DC/DC CONVERTER

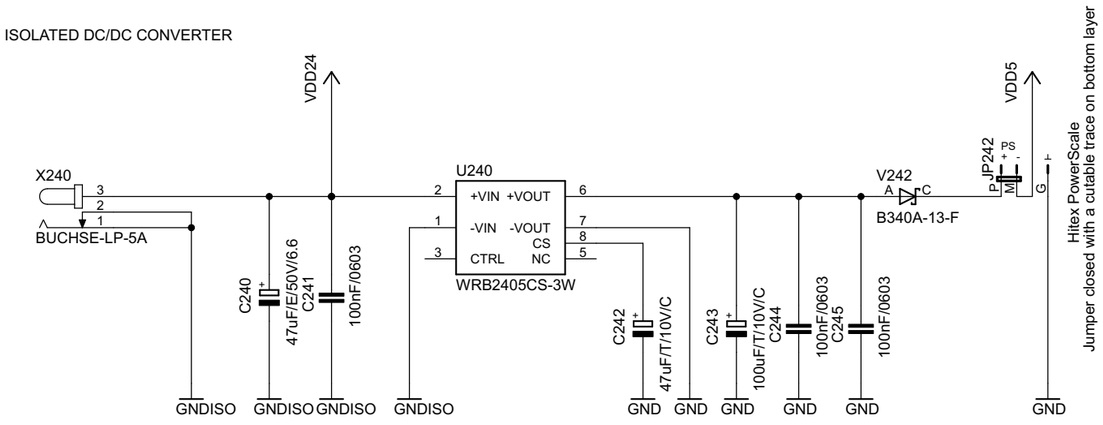

+3V3 POWER SUPPLY

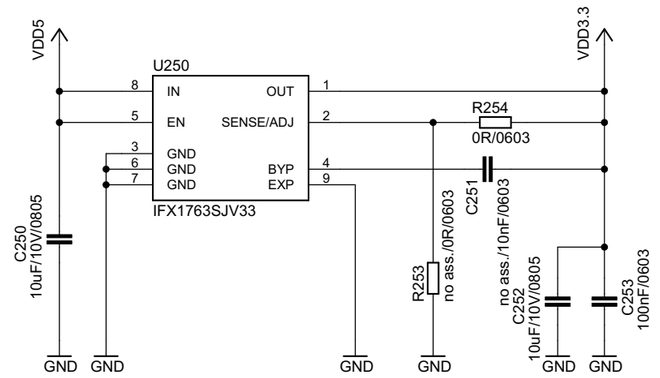

POWER LED

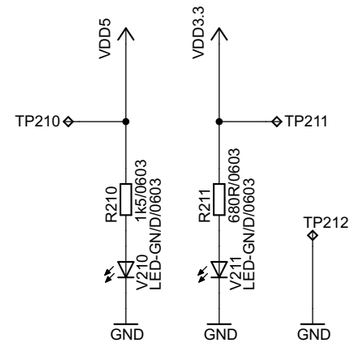

I2C GPIO EXPANDER

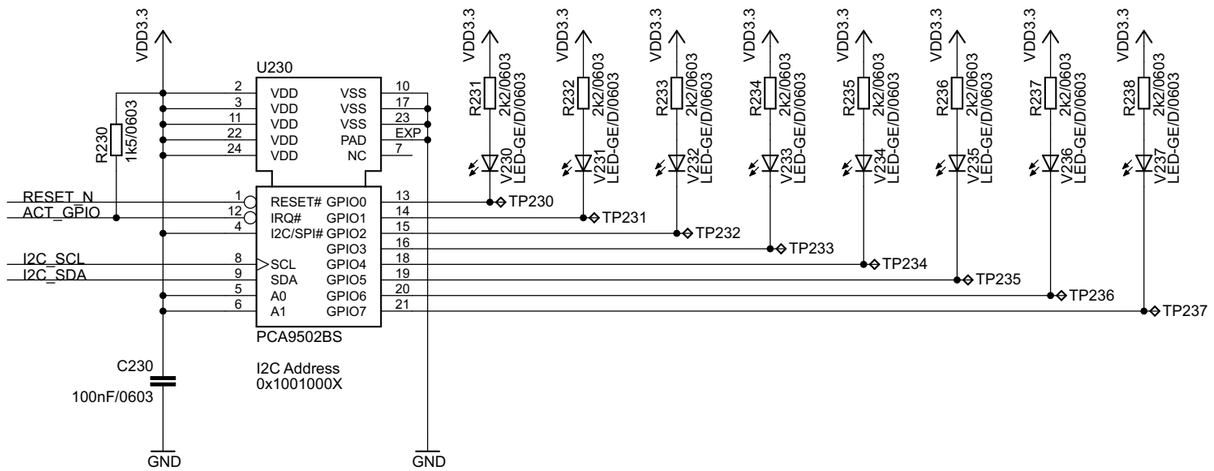

I2C PULLUPS

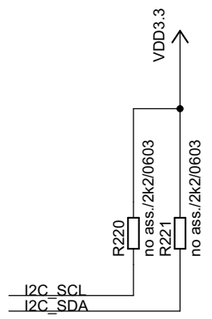

This document may not be passed on, duplicated or its contents utilized, unless expressly permitted. Violating this stipulation will result in the liability to pay damages. All rights reserved in case of a patent registration or registered design.

R2 / 26.08.2011 / Ma

hitex DEVELOPMENT TOOLS

Satellite, I2C-GPIO, Power	
AUT_ISO-V1	
19.03.2012 10:48:45	
Sheet: 2/3	

ISOFACE OUT

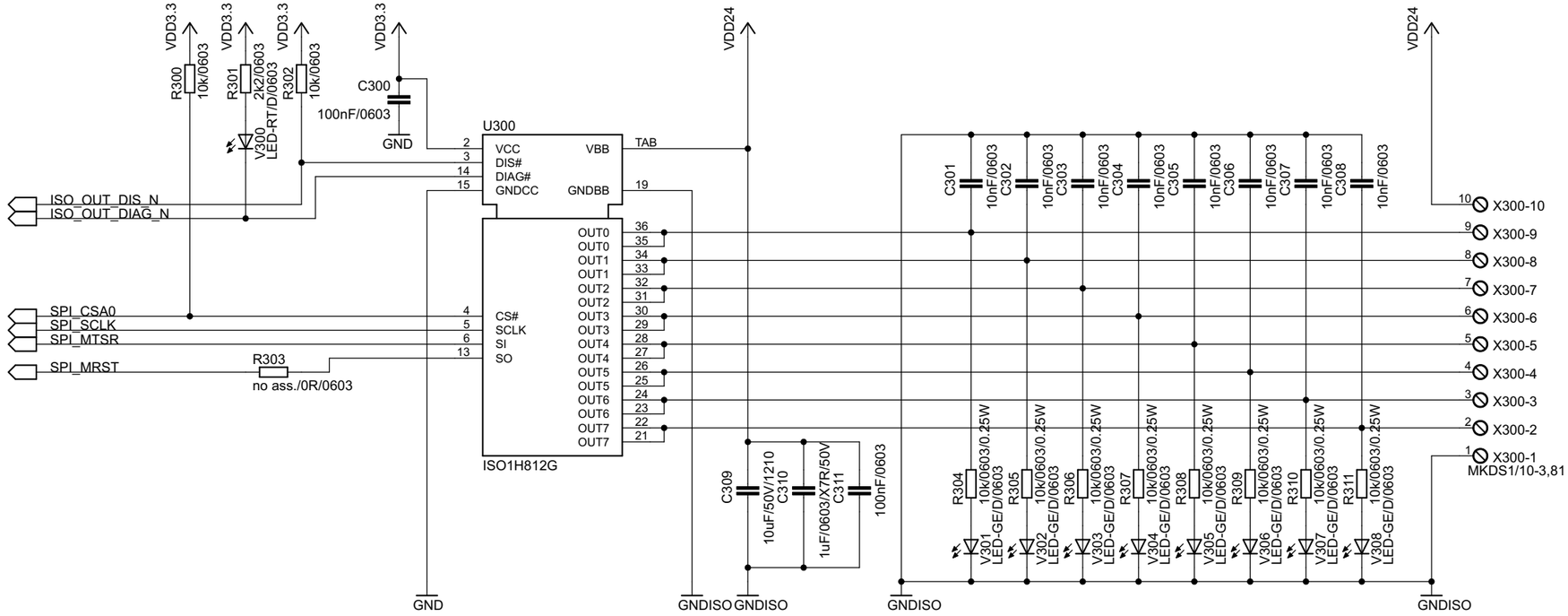

ISOFACE IN

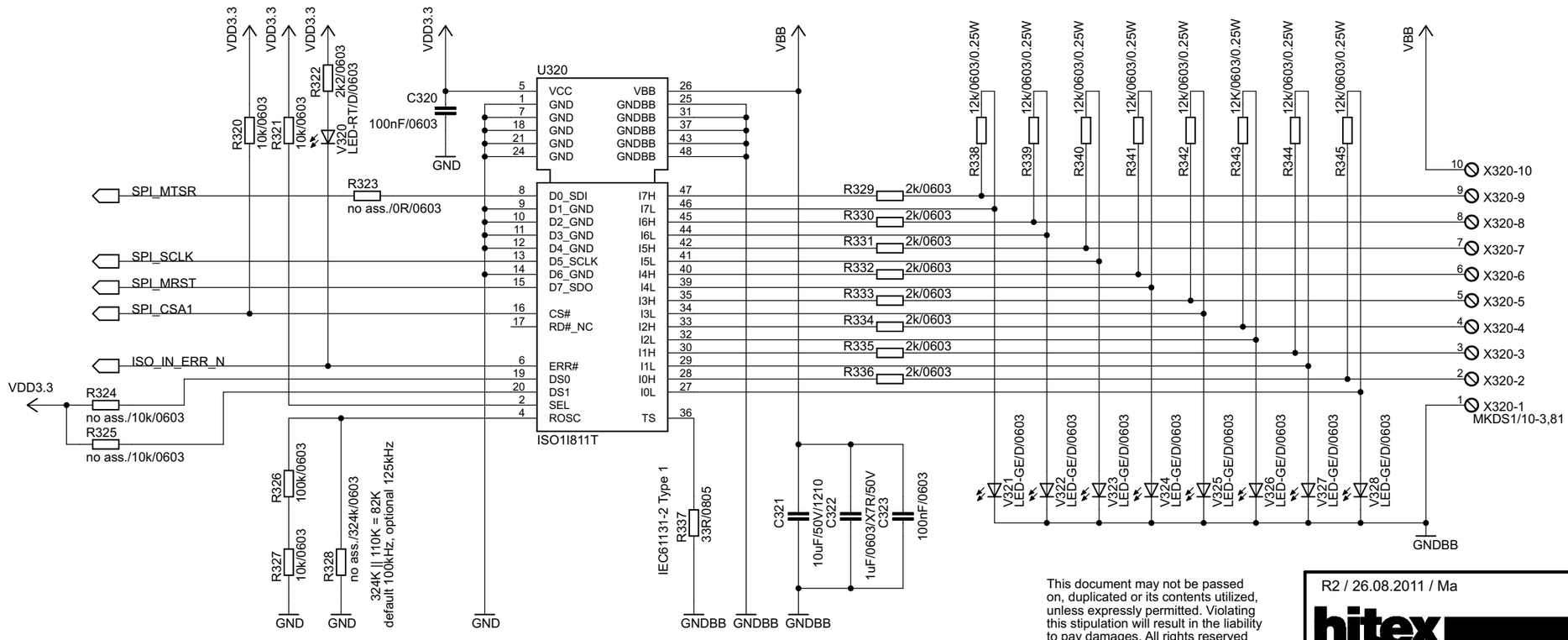

This document may not be passed on, duplicated or its contents utilized, unless expressly permitted. Violating this stipulation will result in the liability to pay damages. All rights reserved in case of a patent registration or registered design.

R2 / 26.08.2011 / Ma

hitex DEVELOPMENT TOOLS

ISOFACE	
AUT_ISO-V1	
19.03.2012 10:48:45	
Sheet: 3/3	