AUT_Base-V2.1

[1] Contents
[2] XMC4800, USB, Microcontroller Power Supply
[3] Ethernet, ISO Power Supply, RTC Battery, Display connector
[4] SDRAM, FRAM, CAN, RGB LED, Power Supply 5V, Authentification
[5] ISOFACE Input
[6] ISOFACE Output
[7] EtherCAT
[8] EhterCAT misc, Power Supply 1,8V

V2 / 28.06.2013

Legal Disclaimer

The information given in this document shall in no event be regarded as a guarantee of conditions or characteristics. With respect to any examples or hints given herein, any typical values stated herein and/or any information regarding the application of the device, Infineon Technologies hereby disclaims any and all warranties and liabilities of any kind, including without limitation, warranties of non-infringement of intellectual property rights of any third party.

AUT_Base-V2.1

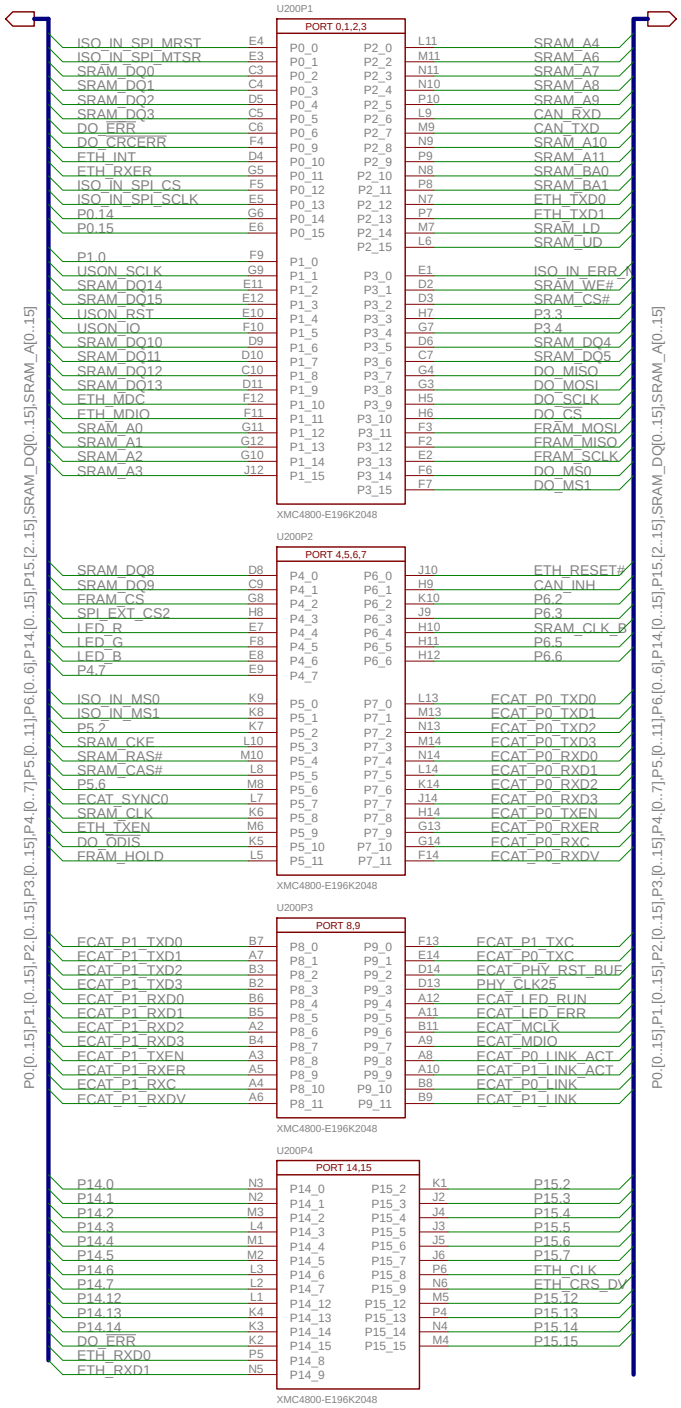

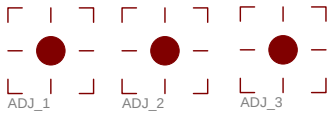

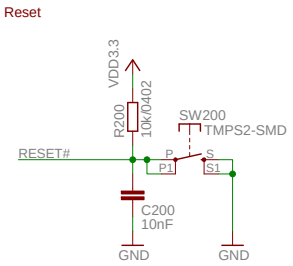

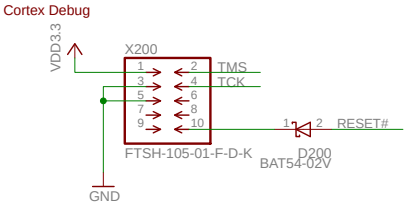

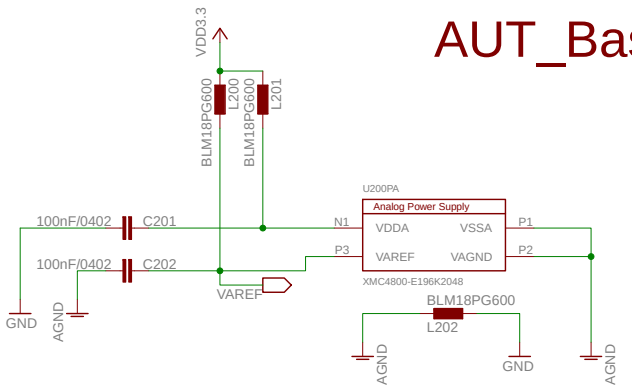

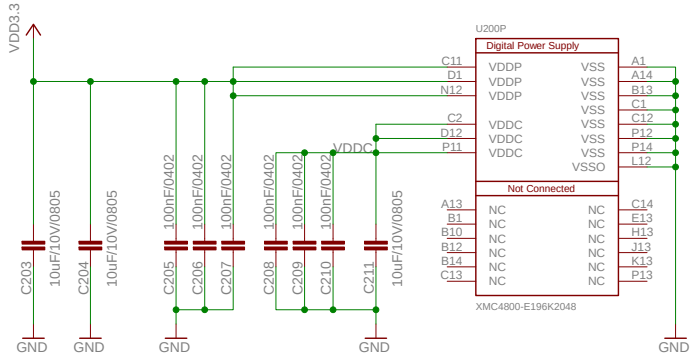

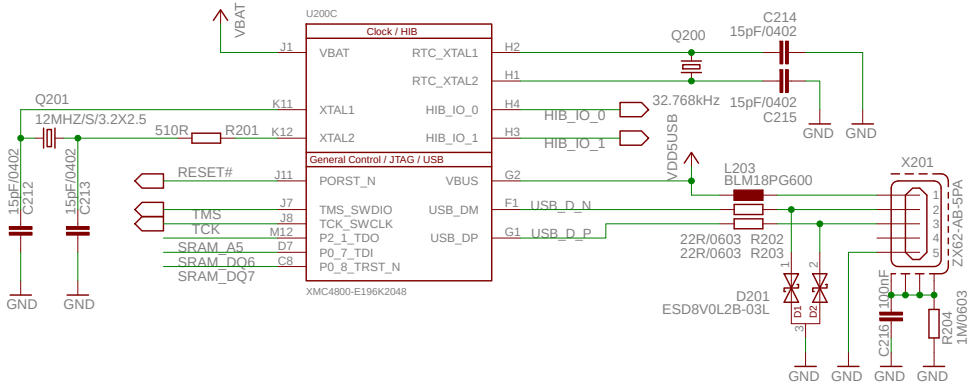

Legal Disclaimer

The information given in this document shall in no event be regarded as a guarantee of conditions or characteristics. With respect to any examples or hints given herein, any typical values stated herein and/or any information regarding the application of the device, Infineon Technologies hereby disclaims any and all warranties and liabilities of any kind, including without limitation, warranties of non-infringement of intellectual property rights of any third party.

AUT_Base-V2.1	
02.12.2015 11:40:28	
Sheet: 2/8	

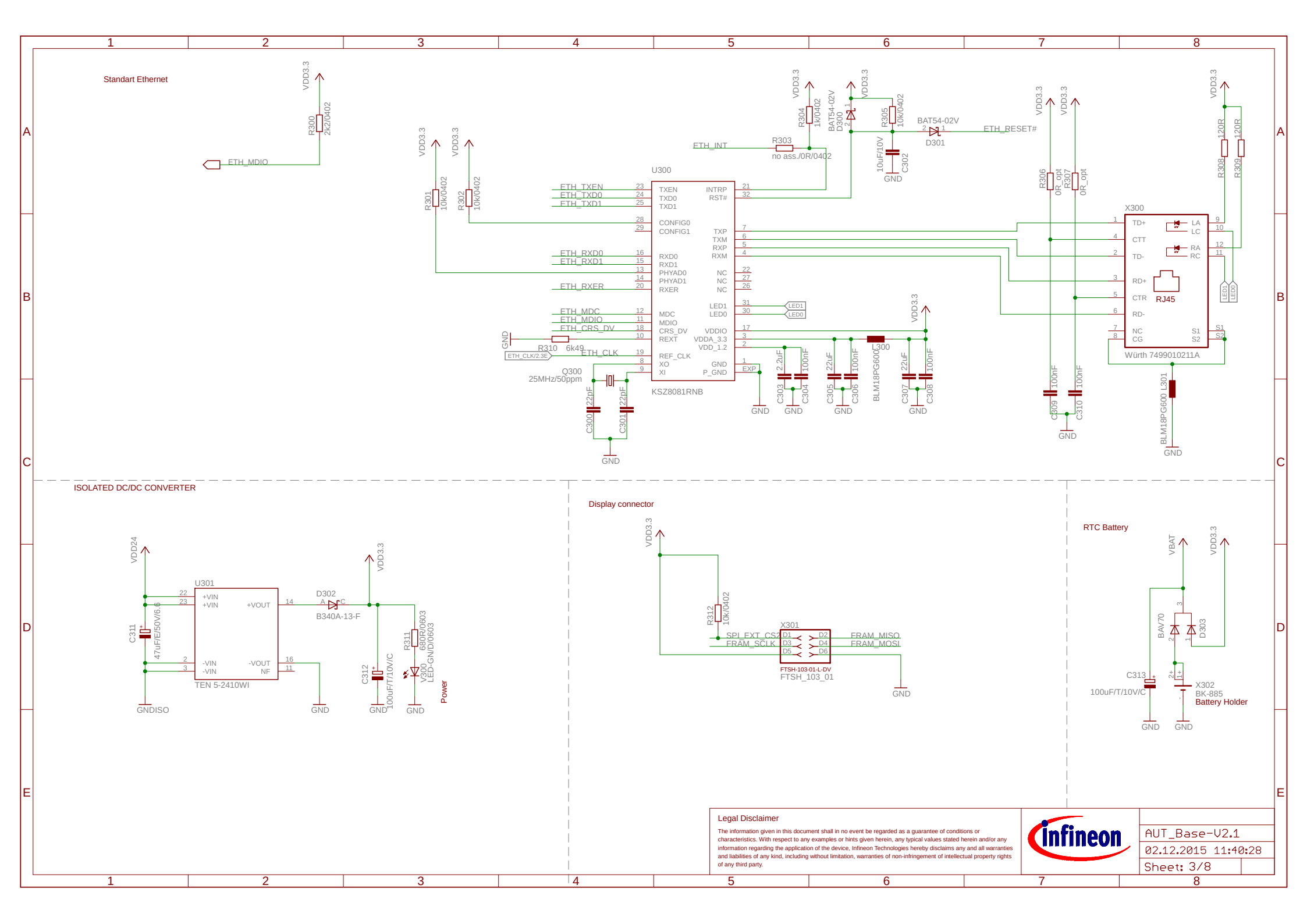
Standart Ethernet
ETH_MDIO
R300
2k2/0402
VDD3.3
R301
10k/0402
R302
10k/0402
R303
no ass./0R/0402
ETH_INT
R304
1k/0402
BAT54-02V
D300
R305
10k/0402
BAT54-02V
D301
ETH_RESET#
10uF/10V
C302
GND
U300
ETH_TXEN
ETH_TXD0
ETH_TXD1
ETH_RXD0
ETH_RXD1
ETH_RXER
ETH_MDC
ETH_MDIO
ETH_CRS_DV
ETH_CLK
TXEN
TXD0
TXD1
CONFIG0
CONFIG1
RXD0
RXD1
PHYAD0
PHYAD1
RXER
MDC
MDIO
CRS_DV
REXT
REF_CLK
XO
XI
INTRP
RST#
TXP
TXM
RXP
RXM
NC
LED1
LED0
VDDIO
VDDA_3.3
VDD_1.2
GND
P_GND
EXP
KSZ8081RNB
R310 6k49
ETH_CLK/2.3E
Q300
25MHz/50ppm
C300 22pF
C301 22pF
C303 2.2uF
C304 100nF
C305 22uF
C306 100nF
L300
BLM18PG600
C307 22uF
C308 100nF
R306 0R_opt
R307 0R_opt
C309 100nF
C310 100nF
X300
TD+
CTT
TD-
RD+
CTR
RD-
NC
CG
LA
LC
RA
RC
S1
S2
RJ45
Würth 7499010211A
R308 120R
R309 120R
BLM18PG600 L301
ISOLATED DC/DC CONVERTER
VDD24
U301
+VIN
-VIN
+VOUT
-VOUT
NF
TEN 5-2410WI
GNDISO
C311 47uF/E/50V/6.6
D302
B340A-13-F
C312 100uF/T/10V/C
R311 680R/0603
VDD_LED-GN/D/0603
Power
Display connector
R312 10k/0402
X301
SPI_EXT_CS2
FRAM_SCLK
FRAM_MISO
FRAM_MOSI
FTSH-103-01-L-DV
FTSH_103_01
RTC Battery
VBAT
BAV70
D303
C313
100uF/T/10V/C
X302
BK-885
Battery Holder
Legal Disclaimer
The information given in this document shall in no event be regarded as a guarantee of conditions or characteristics. With respect to any examples or hints given herein, any typical values stated herein and/or any information regarding the application of the device, Infineon Technologies hereby disclaims any and all warranties and liabilities of any kind, including without limitation, warranties of non-infringement of intellectual property rights of any third party.
AUT_Base-V2.1
02.12.2015 11:40:28
Sheet: 3/8

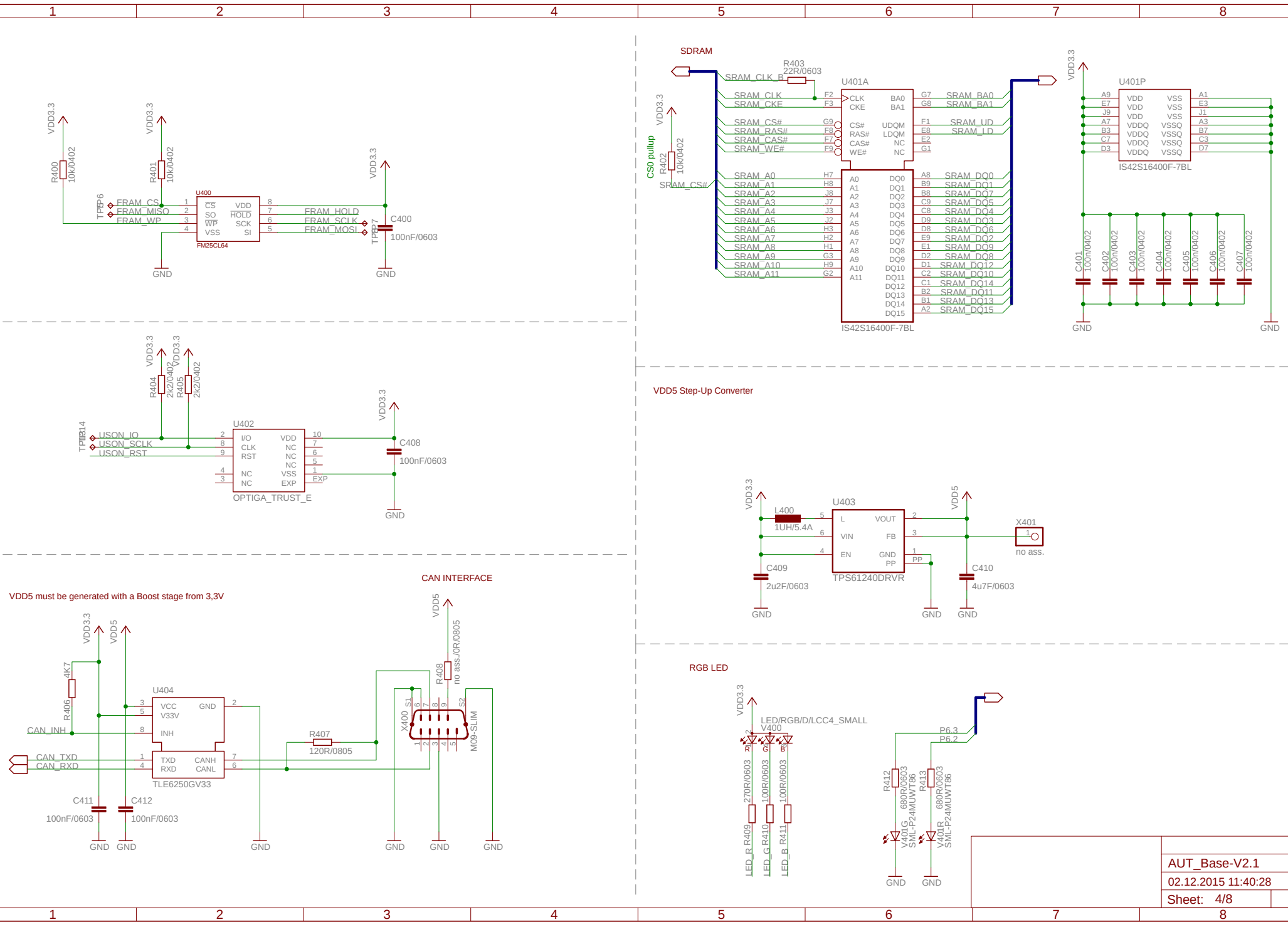
SDRAM
U401A
U401P
IS42S16400F-7BL
SRAM_CLK_B
SRAM_CLK
SRAM_CKE
SRAM_CS#
SRAM_RAS#
SRAM_CAS#
SRAM_WE#
SRAM_A0
SRAM_A1
SRAM_A2
SRAM_A3
SRAM_A4
SRAM_A5
SRAM_A6
SRAM_A7
SRAM_A8
SRAM_A9
SRAM_A10
SRAM_A11
SRAM_BA0
SRAM_BA1
SRAM_UD
SRAM_LD
SRAM_DQ0
SRAM_DQ1
SRAM_DQ2
SRAM_DQ3
SRAM_DQ4
SRAM_DQ5
SRAM_DQ6
SRAM_DQ7
SRAM_DQ8
SRAM_DQ9
SRAM_DQ10
SRAM_DQ11
SRAM_DQ12
SRAM_DQ13
SRAM_DQ14
SRAM_DQ15
R403
22R/0603
CS0 pullup
R402
10k/0402
VDD3.3
GND
U400
FM25CL64
FRAM_CS
FRAM_MISO
FRAM_WP
FRAM_HOLD
FRAM_SCLK
FRAM_MOSI
R400
R401
C400
100nF/0603
U402
OPTIGA_TRUST_E
USON_IO
USON_SCLK
USON_RST
R404
R405
2k2/0402
C408
VDD5 Step-Up Converter
U403
TPS61240DRVR
L400
1UH/5.4A
C409
2u2F/0603
C410
4u7F/0603
VDD5
X401
no ass.
VDD5 must be generated with a Boost stage from 3,3V
CAN INTERFACE
U404
TLE6250GV33
CAN_INH
CAN_TXD
CAN_RXD
R406
4K7
R407
120R/0805
R408
no ass./0R/0805
X400
M09-SLIM
C411
C412
100nF/0603
RGB LED
LED/RGB/D/LCC4_SMALL
V400
R409
R410
R411
270R/0603
100R/0603
R412
R413
680R/0603
V401G
V401R
SML-P24MUWT86
P6.3
P6.2
LED_R
LED_G
LED_B
AUT_Base-V2.1
02.12.2015 11:40:28
Sheet: 4/8

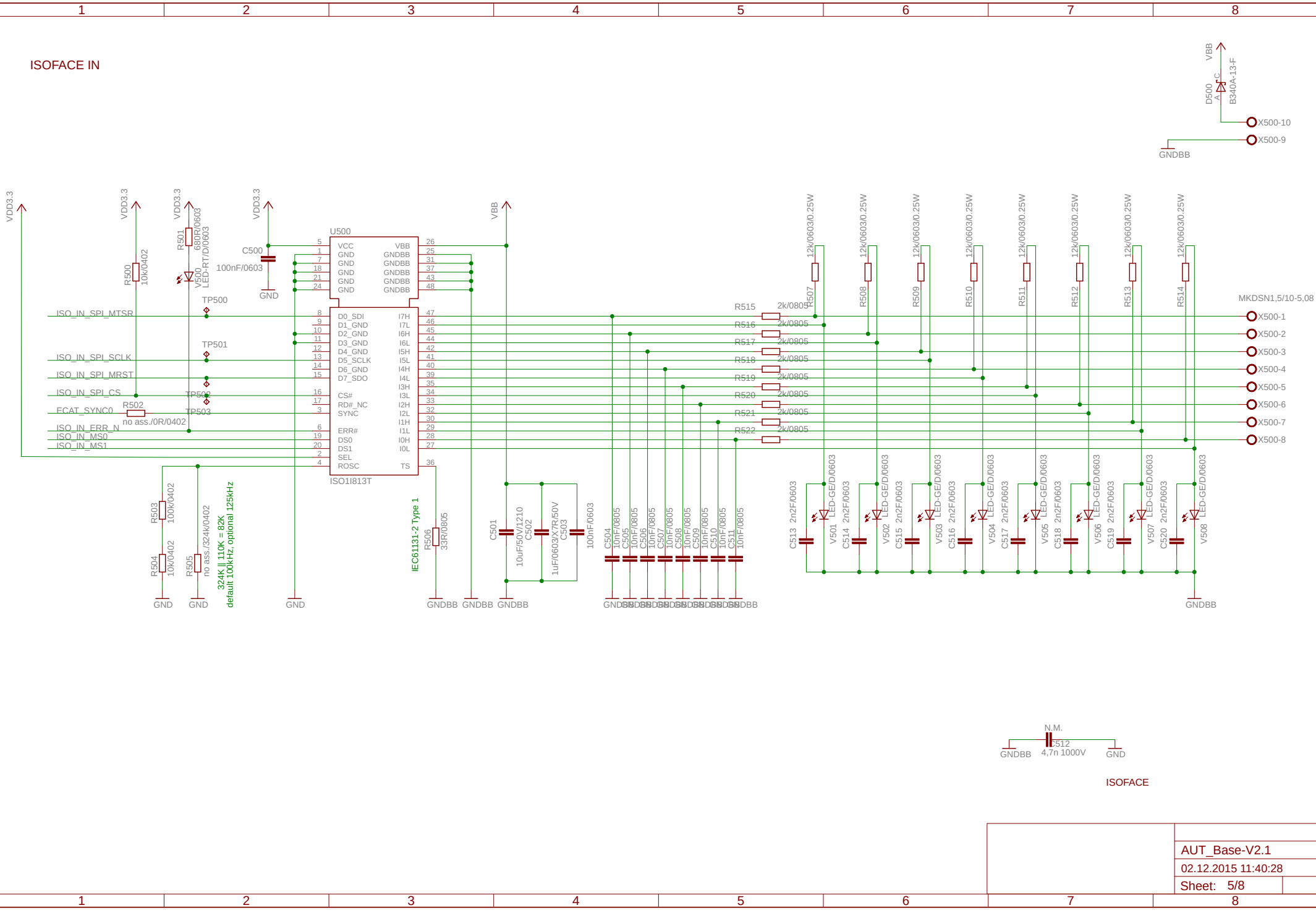
ISOFACE IN
VDD3.3
VBB
U500
ISO1I813T
VCC
GND
GNDBB
D0_SDI
D1_GND
D2_GND
D3_GND
D4_GND
D5_SCLK
D6_GND
D7_SDO
CS#
RD#_NC
SYNC
ERR#
DS0
DS1
SEL
ROSC
I7H
I7L
I6H
I6L
I5H
I5L
I4H
I4L
I3H
I3L
I2H
I2L
I1H
I1L
I0H
I0L
TS
C500
100nF/0603
R500
10k/0402
R501
680R/0603
V500
LED-RT/D/0603
TP500
TP501
TP502
TP503
ISO_IN_SPI_MTSR
ISO_IN_SPI_SCLK
ISO_IN_SPI_MRST
ISO_IN_SPI_CS
FCAT_SYNC0
ISO_IN_ERR_N
ISO_IN_MS0
ISO_IN_MS1
R502
no ass./0R/0402
R503
100k/0402
R504
10k/0402
R505
no ass./324k/0402
324K || 110K = 82K
default 100kHz, optional 125kHz
IEC61131-2 Type 1
R506
33R/0805
C501
10uF/50V/1210
C502
1uF/0603/X7R/50V
C503
100nF/0603
C504
10nF/0805
C505
C506
C507
C508
C509
C510
C511
R507
R508
R509
R510
R511
R512
R513
R514
12k/0603/0.25W
R515
R516
R517
R518
R519
R520
R521
R522
2k/0805
V501
V502
V503
V504
V505
V506
V507
V508
LED-GE/D/0603
C513
C514
C515
C516
C517
C518
C519
C520
2n2F/0603
MKDSN1,5/10-5,08
X500-1
X500-2
X500-3
X500-4
X500-5
X500-6
X500-7
X500-8
D500
B340A-13-F
X500-10
X500-9
N.M.
C512
4,7n 1000V
ISOFACE
AUT_Base-V2.1
02.12.2015 11:40:28
Sheet: 5/8

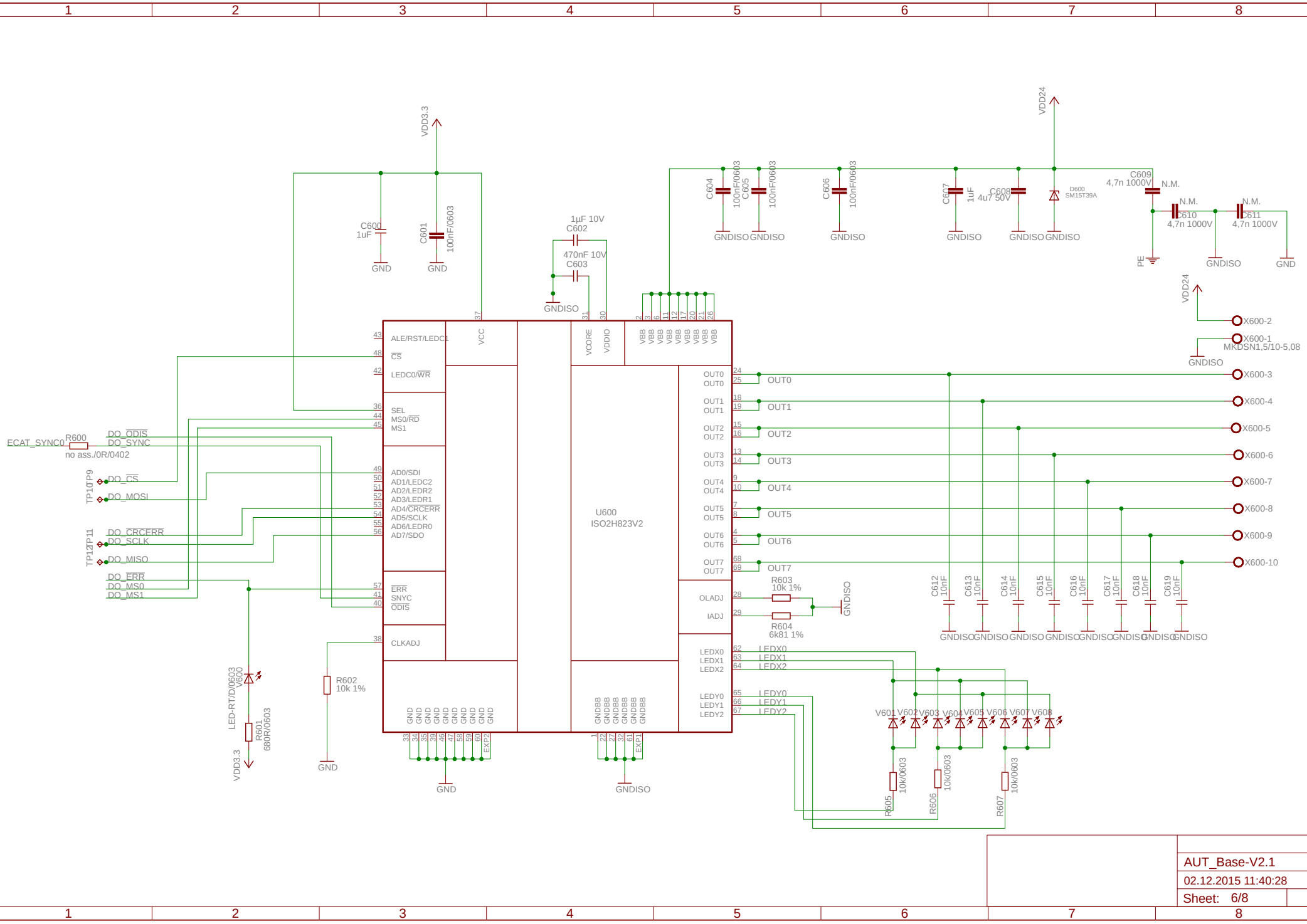
U600
ISO2H823V2
VDD3.3
VDD24
GND
GNDISO
C600 1uF
C601 100nF/0603
C602 1µF 10V
C603 470nF 10V
C604 100nF/0603
C605 100nF/0603
C606 100nF/0603
C607 1uF
C608 4u7 50V
D600 SM15T39A
C609 4,7n 1000V N.M.
C610 4,7n 1000V N.M.
C611 4,7n 1000V N.M.
PE
X600-1 MKDSN1,5/10-5,08
X600-2
X600-3
X600-4
X600-5
X600-6
X600-7
X600-8
X600-9
X600-10
R600 no ass./0R/0402
R601 680R/0603
R602 10k 1%
R603 10k 1%
R604 6k81 1%
R605 10k/0603
R606 10k/0603
R607 10k/0603
V600 LED-RT/D/0603
V601 V602 V603 V604 V605 V606 V607 V608
ECAT_SYNC0
DO_ODIS
DO_SYNC
DO_CS
DO_MOSI
DO_CRCERR
DO_SCLK
DO_MISO
DO_ERR
DO_MS0
DO_MS1
TP10 TP9
TP12 TP11
ALE/RST/LEDC1
CS
LEDC0/WR
SEL
MS0/RD
MS1
AD0/SDI
AD1/LEDC2
AD2/LEDR2
AD3/LEDR1
AD4/CRCERR
AD5/SCLK
AD6/LEDR0
AD7/SDO
ERR
SNYC
ODIS
CLKADJ
VCC
VCORE
VDDIO
VBB
OUT0
OUT1
OUT2
OUT3
OUT4
OUT5
OUT6
OUT7
OLADJ
IADJ
LEDX0
LEDX1
LEDX2
LEDY0
LEDY1
LEDY2
GNDBB
EXP1
EXP2
C612 10nF
C613 10nF
C614 10nF
C615 10nF
C616 10nF
C617 10nF
C618 10nF
C619 10nF
AUT_Base-V2.1
02.12.2015 11:40:28
Sheet: 6/8

ECAT Port0 IN

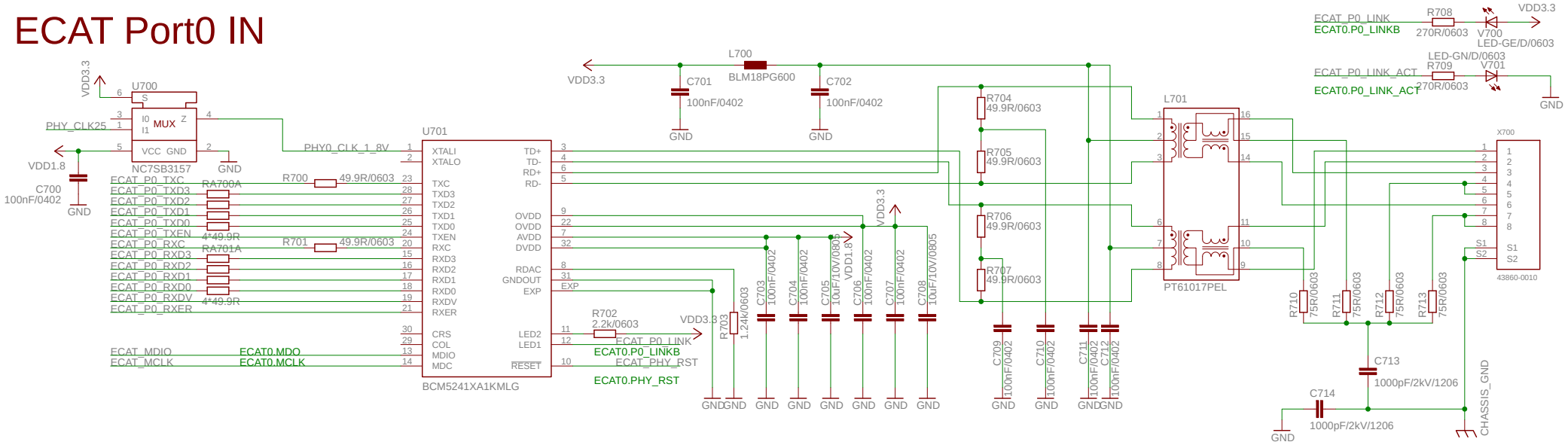

ECAT Port1 OUT

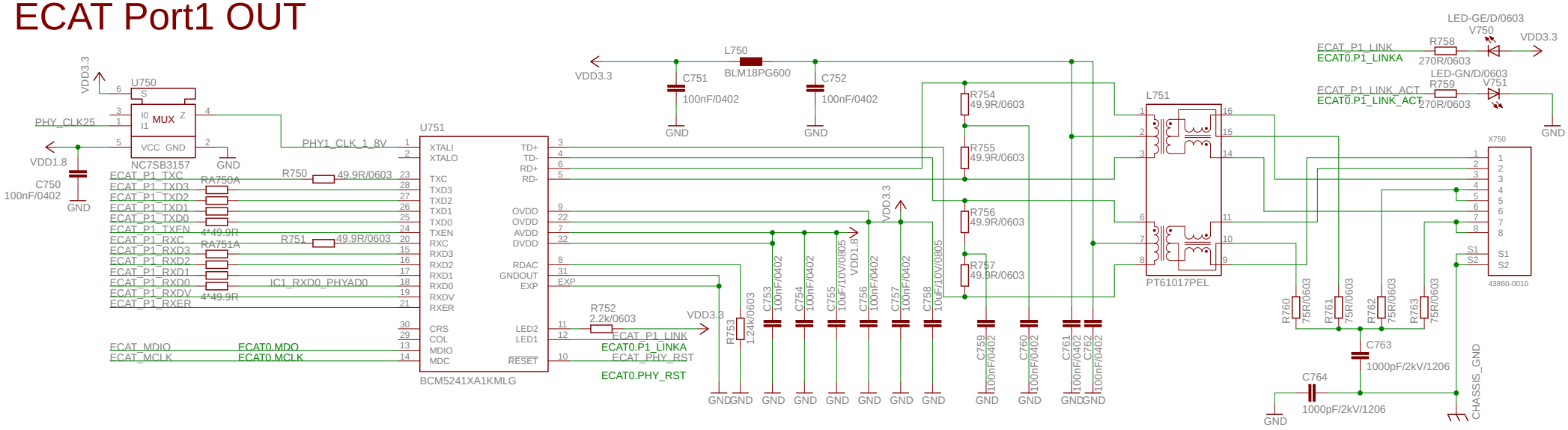

Relex EtherCAT Board V1.0

Legal Disclaimer

The information given in this document shall in no event be regarded as a guarantee of conditions or characteristics. With respect to any examples or hints given herein, any typical values stated herein and/or any information regarding the application of the device, Infineon Technologies hereby disclaims any and all warranties and liabilities of any kind, including without limitation, warranties of non-infringement of intellectual property rights of any third party.

AUT_Base-V2.1	
02.12.2015 11:40:28	
Sheet: 7/8	

Power 1,8V BroadCOM PHY Supply

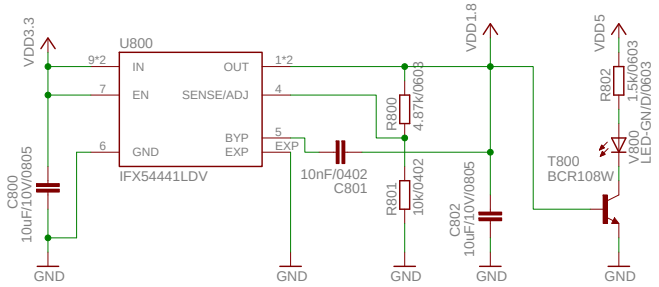



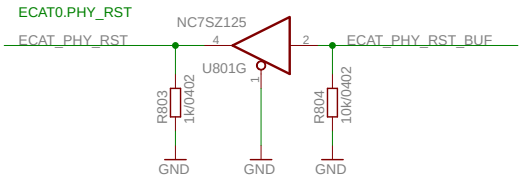

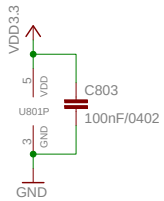

EtherCAT LEDs

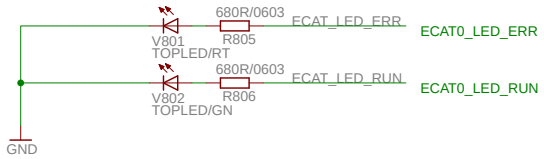

EtherCAT PHY Pull Resistors

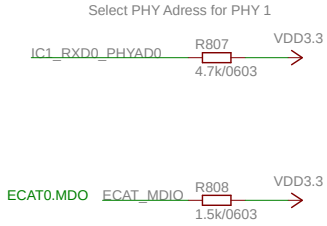

Legal Disclaimer

The information given in this document shall in no event be regarded as a guarantee of conditions or characteristics. With respect to any examples or hints given herein, any typical values stated herein and/or any information regarding the application of the device, Infineon Technologies hereby disclaims any and all warranties and liabilities of any kind, including without limitation, warranties of non-infringement of intellectual property rights of any third party.

AUT_Base-V2.1

02.12.2015 11:40:28

Sheet: 8/8