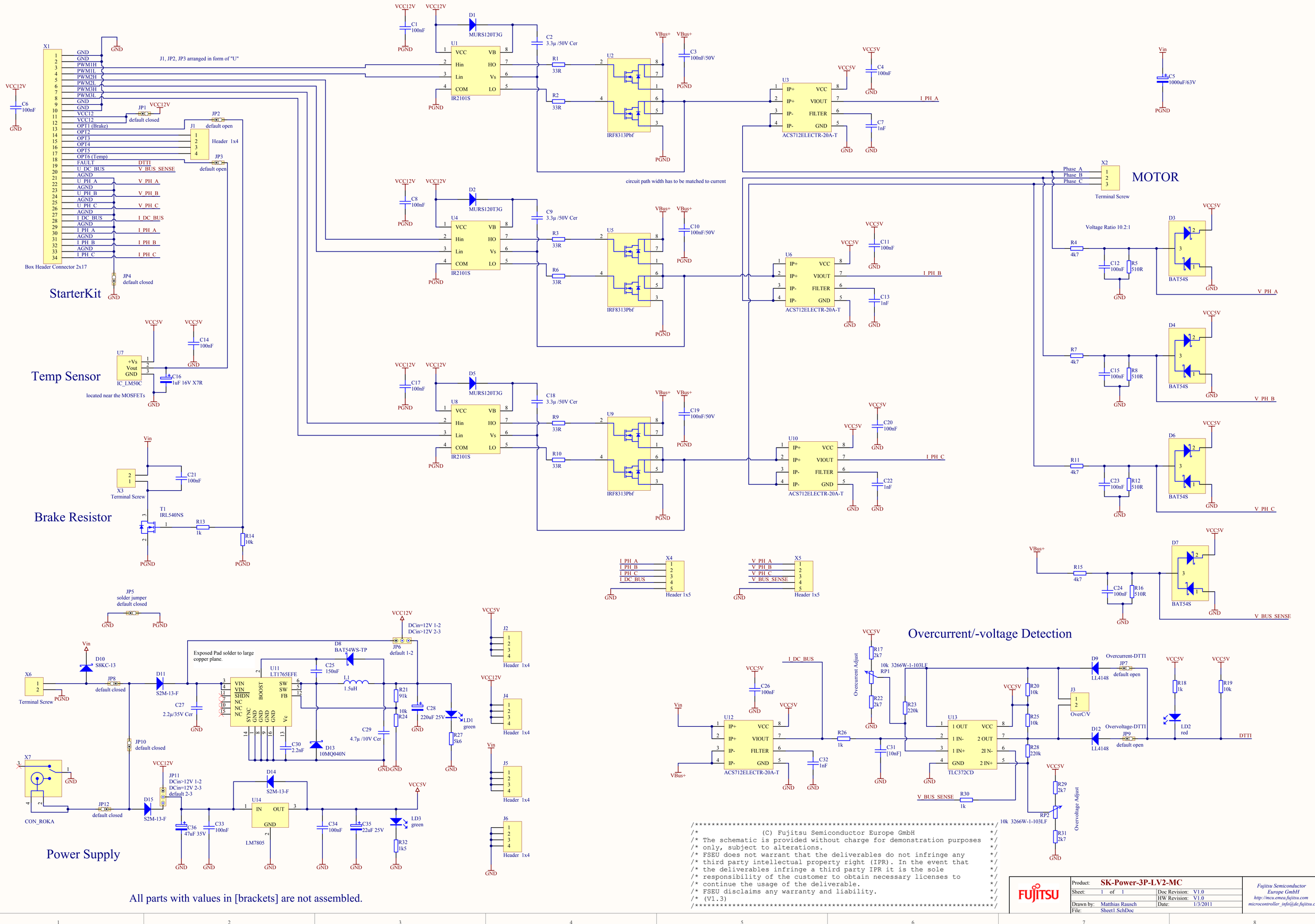

All parts with values in [brackets] are not assembled.

/**********/
/* (C) Fujitsu Semiconductor Europe GmbH */
/* The schematic is provided without charge for demonstration purposes */
/* only, subject to alterations. */
/* FSEU does not warrant that the deliverables do not infringe any */
/* third party intellectual property right (IPR). In the event that */
/* the deliverables infringe a third party IPR it is the sole */
/* responsibility of the customer to obtain necessary licenses to */
/* continue the usage of the deliverable. */
/* FSEU disclaims any warranty and liability. */
/* (V1.3) */
/**********/

FUJITSU	Product: SK-Power-3P-LV2-MC		Fujitsu Semiconductor Europe GmbH
	Sheet: 1 of 1	Doc Revision: V1.0	http://mcu.emea.fujitsu.com
		HW Revision: V1.0	microcontroller_info@de.fujitsu.com
	Drawn by: Matthias Rausch	Date: 1/3/2011	
	File: Sheet1.SchDoc		