Revision History

Version	Date	Updated by	Approved by	Modifications
1.0.0	2013-05-02	Rex Cao		First draft
1.1.0	2013-06-17	Kevin Lin		1. D2->LED3,D3->LED4,D6->LED5 2. CN3 (J6 of V1.0.0) P5-->GND,CN4 (J14 of V1.0.0) P5-->GND 3. TPOINT GND->TPOIN VSS 4. All of the J? has renamed, and add J19,J20 5. R11 510R->10K 6. R9 10M->1M 7. Q1,Q2 package update 8. SDRAM_CS change from MCSX10 (PIN96) to MCSX80 (PIN35) 9. Add R13, R14 for Oscillator of MB9BF568R (U1)
1.2.0	2014-03-24	Rex Cao		1. Update the Title Bar to Spansion Inc.
1.3.0	2014-09-03	Rex Cao		1. Change the SDRAM to HY57V281620FTP-H.

Spansion Inc.

Author: Rex.Cao

Title: (SCH)SK-FM4-U120-9B560(-MEM)

Size	Document Number	Rev
A4	Cover	V1.3.0

Date: Wednesday, September 03, 2014 Sheet 1 of 9

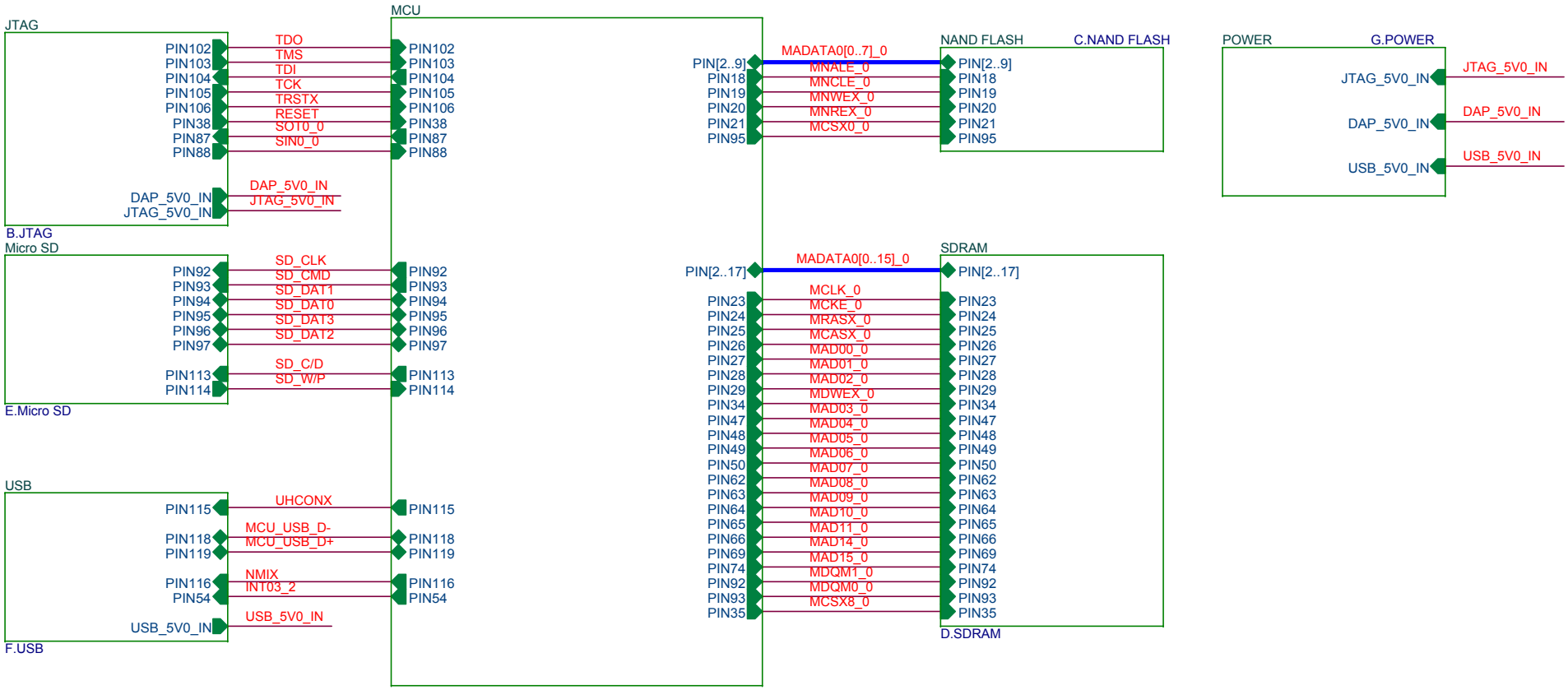

Spansion Inc.

Author: Rex.Cao

Title: (SCH)SK-FM4-U120-9B560(-MEM)

Size	Document Number	Rev
A4	Hierarchical_Page	V1.3.0

Date: Wednesday, September 03, 2014 Sheet 2 of 9

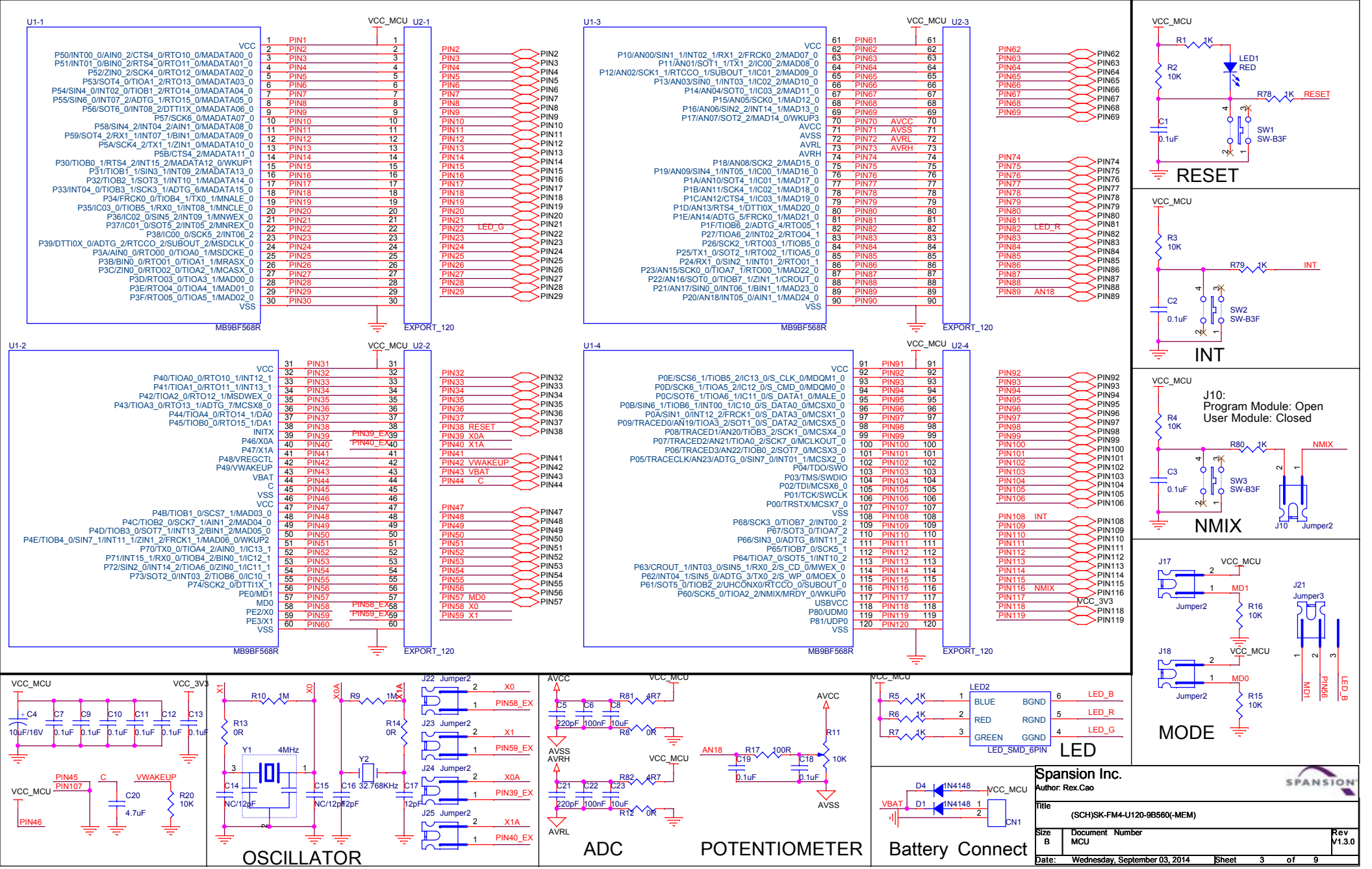
U1-1
U2-1
U1-3
U2-3
U1-2
U2-2
U1-4
U2-4
VCC_MCU
MB9BF568R
EXPORT_120
RESET
INT
NMIX
J10:
Program Module: Open
User Module: Closed
MODE
LED
OSCILLATOR
ADC
POTENTIOMETER
Battery Connect
Spansion Inc.
Author: Rex.Cao
Title
(SCH)SK-FM4-U120-9B560(-MEM)
Size
B
Document Number
MCU
Rev
V1.3.0
Date: Wednesday, September 03, 2014
Sheet 3 of 9

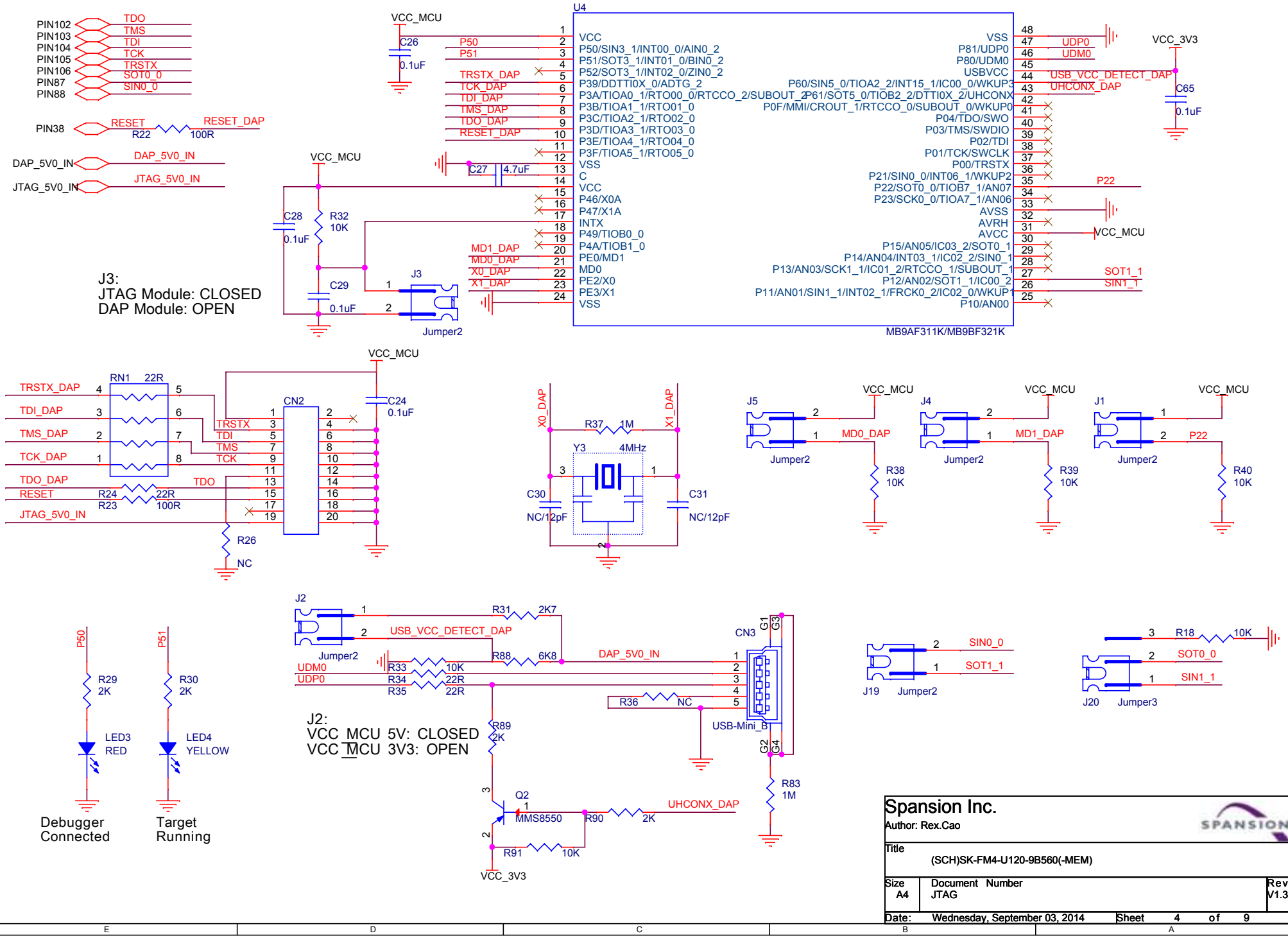

Spansion Inc.		
Author: Rex.Cao		
Title: (SCH)SK-FM4-U120-9B560(-MEM)		
Size: A4	Document Number: JTAG	Rev: V1.3.0
Date: Wednesday, September 03, 2014	Sheet 4 of 9	

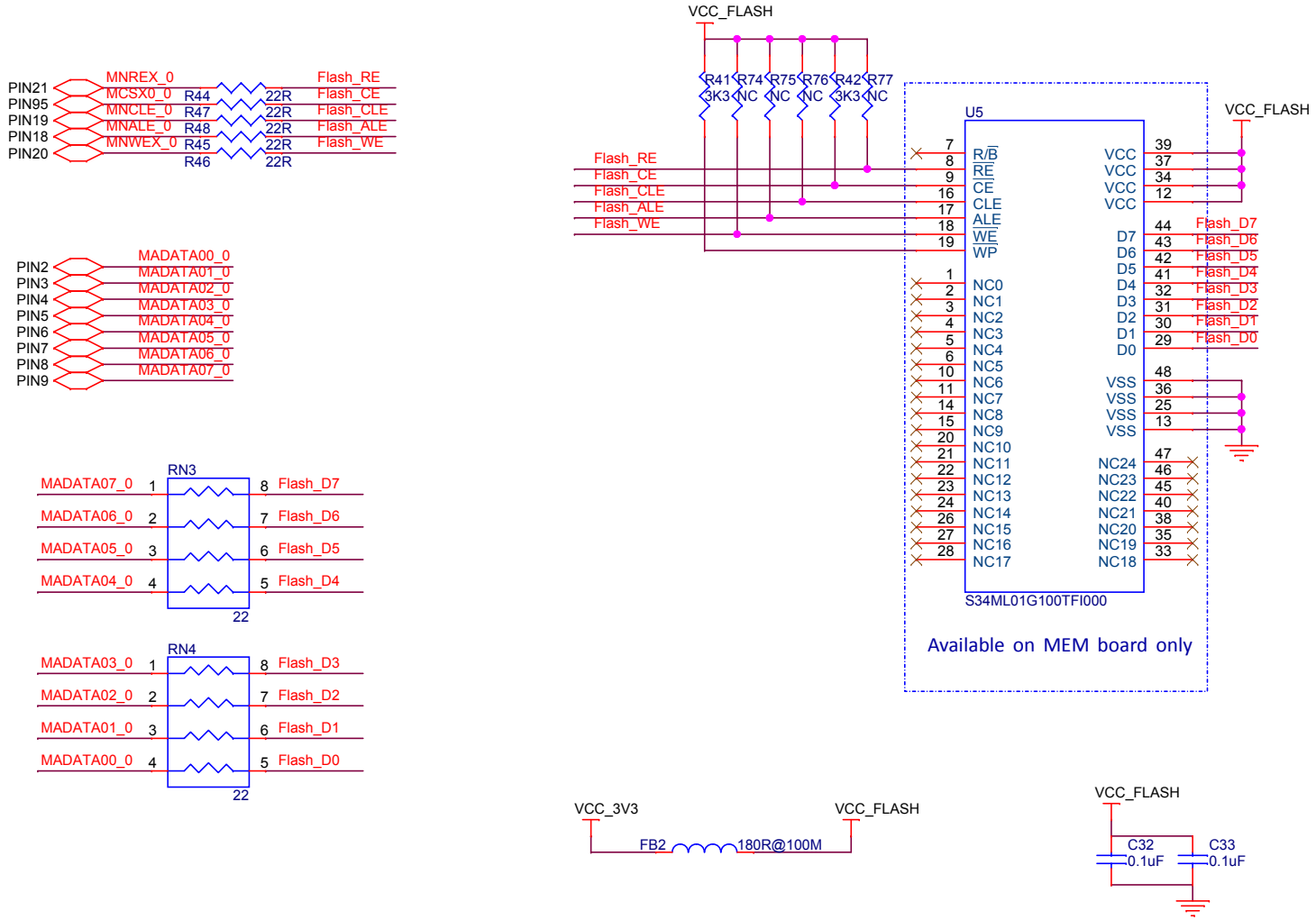

Spansion Inc.		
Author: Rex.Cao		
Title: (SCH)SK-FM4-U120-9B560(-MEM)		
Size: A4	Document Number: NAND FLASH	Rev: V1.3.0
Date: Wednesday, September 03, 2014	Sheet 5 of 9	

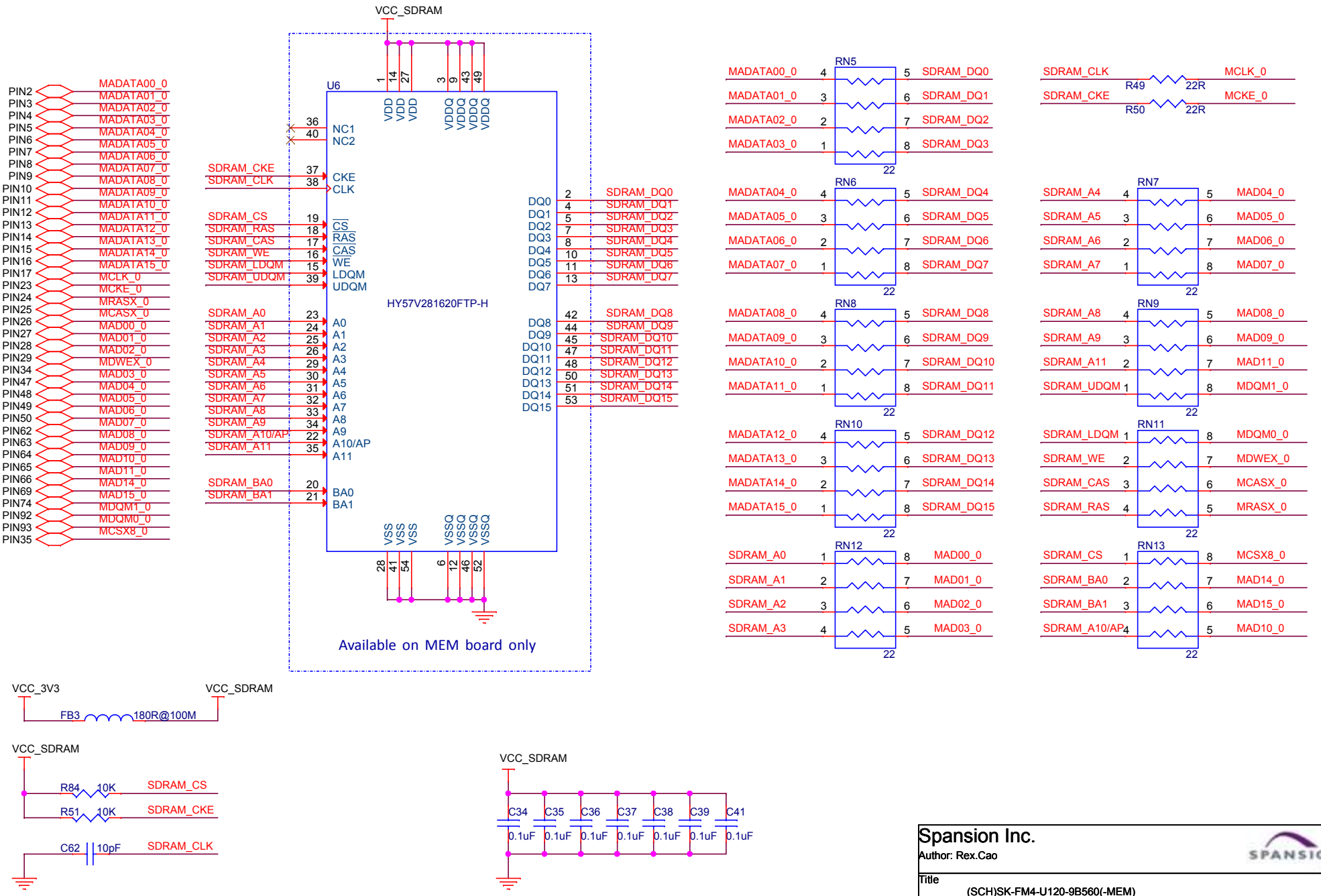

Spansion Inc.		
Author: Rex.Cao		
Title: (SCH)SK-FM4-U120-9B560(-MEM)		
Size: A4	Document Number: SDRAM	Rev: V1.3.0
Date: Wednesday, September 03, 2014	Sheet 6 of 9	

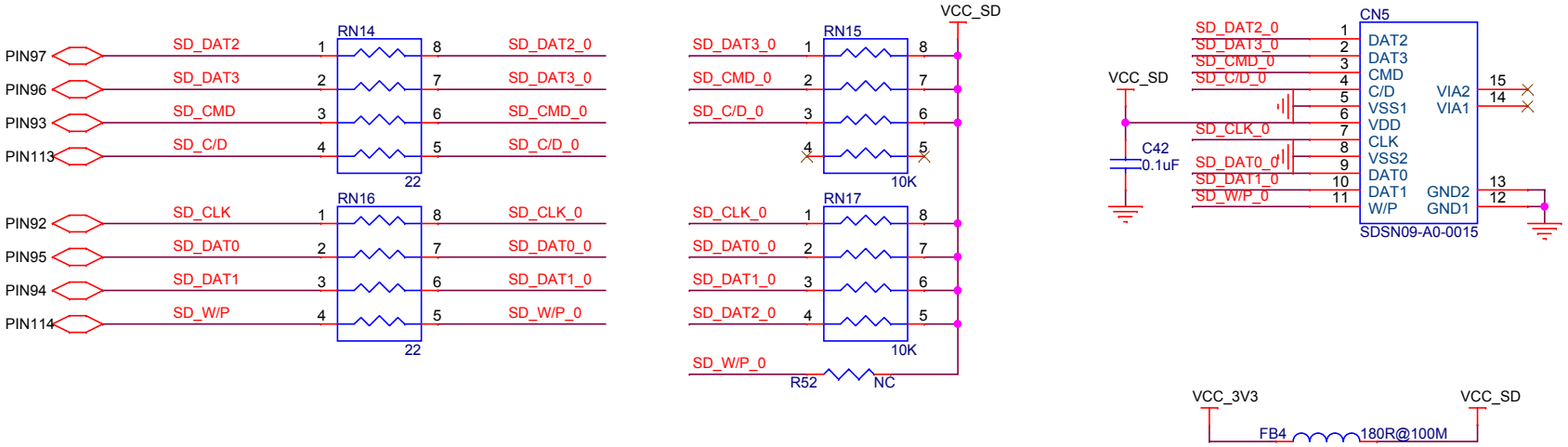

Spansion Inc.		
Author: Rex.Cao		
Title: (SCH)SK-FM4-U120-9B560(-MEM)		
Size: A4	Document Number: Micro SD	Rev: V1.3.0
Date: Wednesday, September 03, 2014	Sheet 7 of 9	

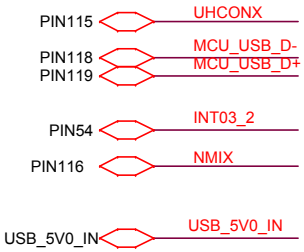

J13:
VCC_MCU 5V: CLOSED
VCC_MCU 3V3: OPEN

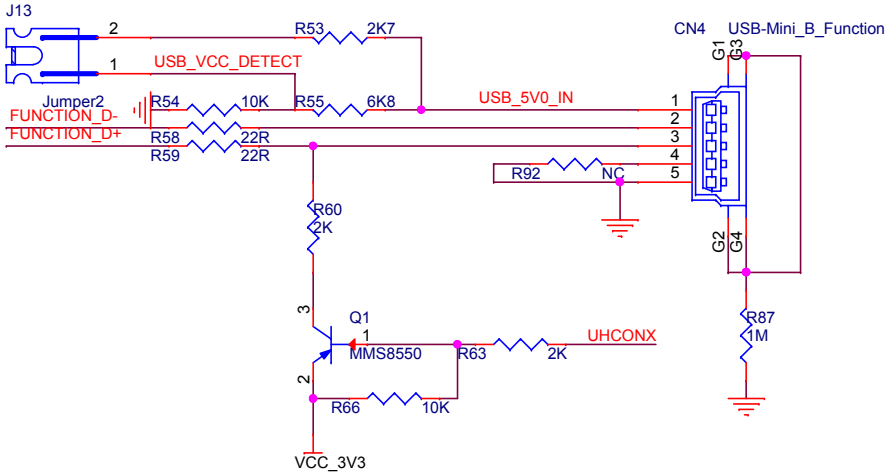

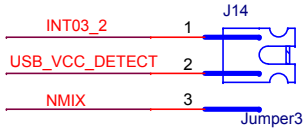

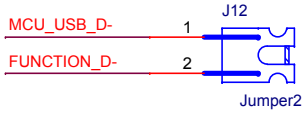

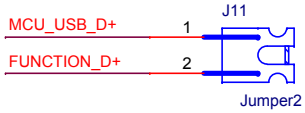

J14:
Program Module: Closed Pin2 to Pin3
User Module: Closed Pin2 to Pin1

J11, J12:
Function: CLOSED
Host: OPEN

Spansion Inc.
Author: Rex.Cao

Title: (SCH)SK-FM4-U120-9B560(-MEM)

Size	Document Number	Rev
A4	USB	V1.3.0

Date: Wednesday, September 03, 2014 Sheet 8 of 9

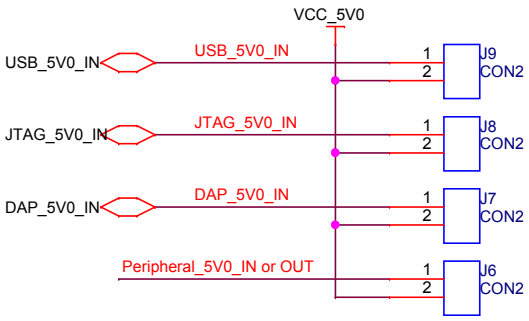

5V Power Select:
USB Function: Closed J9
JTAG Module: Closed J8
DAP Module: Closed J7
Peripheral 5V0 IN or OUT: Closed J6

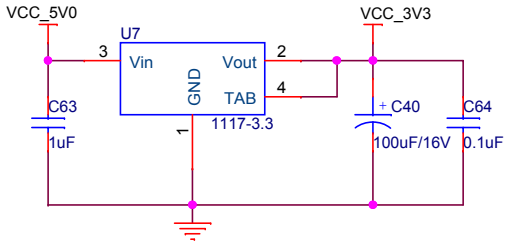

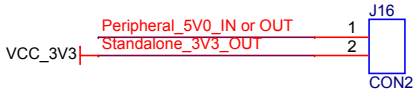

J16: Conect to Peripheral Board
For 5V Input or 5VOutput or 3V3 Output

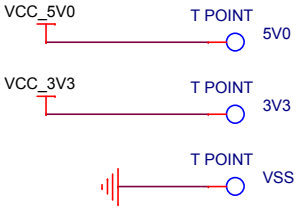

TEST POINT

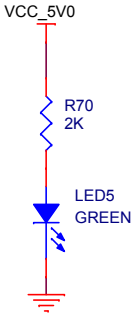

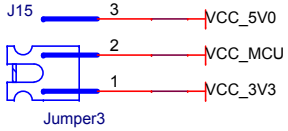

J15:
VCC_MCU 3V3: Closed Pin2 to Pin1
VCC_MCU 5V0: Closed Pin2 to Pin3

Spansion Inc.		
Author: Rex.Cao		
Title: (SCH)SK-FM4-U120-9B560(-MEM)		
Size: A4	Document Number: POWER	Rev: V1.3.0
Date: Wednesday, September 03, 2014	Sheet 9 of 9	