Revision History

Version	Date	Updated by	Approved by	Modifications
1.0.0	2013-06-17	Rex Cao		First draft
2.0.0	2014-03-18	Rex Cao		1. Smart Card Modify the circuit 2. Joy Stick Adjust the resistance value 3. LCM Remove the TFT LCD part Change MCSX8_0 to MCSX1_0 Add Pin78 to control the LEDK of U3 4. SPI IF Exchange the SI and SO signal of the SPI chip 5. Phonejack Add Pin37 for BT input of QPRC Remove R67 6. LIN Remove SW2, Add PIN15 to contrl NSLP of U9 7. Rename "TSC IF" to "Multicon" 8. Rearrange some parts no.

OBSOLETE

Spansion Inc.

Author: Rex.Cao

Title: (SCH)SK-FM4-U-PERIPHERAL

Size	Document Number	Rev
A4	Cover	V2.0.0

Date: Monday, April 21, 2014 Sheet 1 of 19



Spansion Inc.		
Author: Rex.Cao		
Title: (SCH)SK-FM4-U-PERIPHERAL		
Size: A4	Document Number: Hierarchical_Page	Rev: V2.0.0
Date: Monday, April 21, 2014	Sheet 2 of 19	



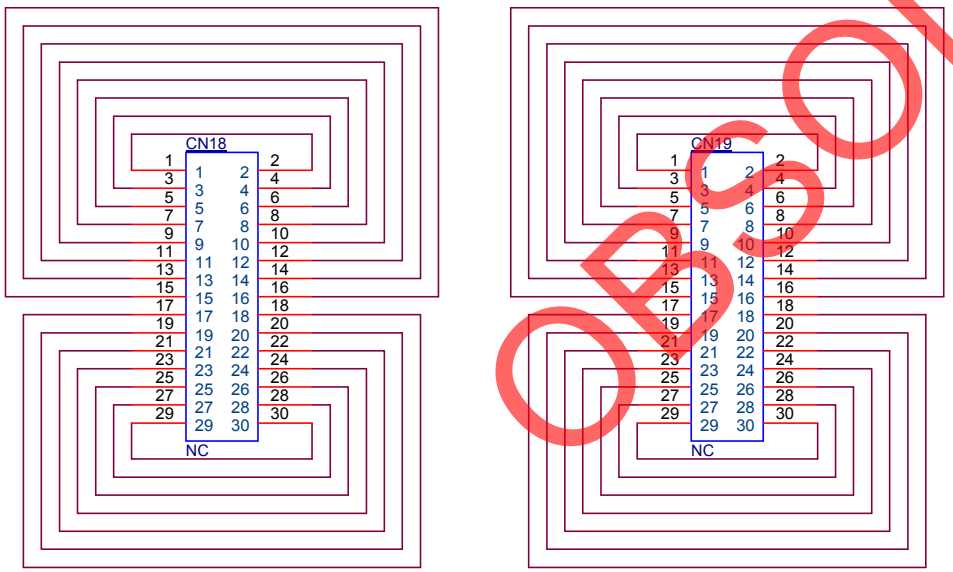

CN18, CN19:
Only for test function

OBSOLETE

Spansion Inc.
Author: Rex.Cao

Title: (SCH)SK-FM4-U-PERIPHERAL

Size	Document Number	Rev
A4	MCU EXPORT	V2.0.0

Date: Monday, April 21, 2014 Sheet 3 of 19

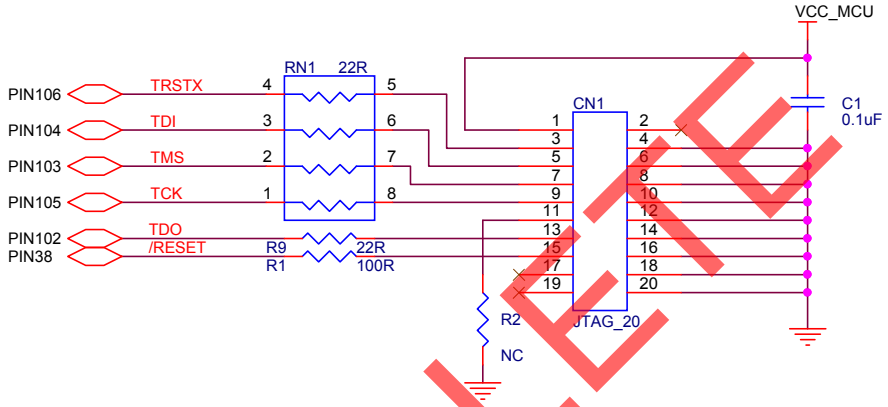

OBSOLETE

Spansion Inc.		
Author: Rex.Cao		
Title: (SCH)SK-FM4-U-PERIPHERAL		
Size: A4	Document Number: JTAG	Rev: V2.0.0
Date: Monday, April 21, 2014	Sheet 4 of 19	

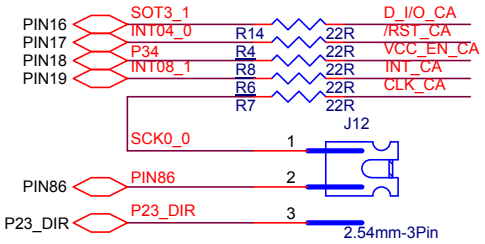

J12:
PIN2 to PIN1: Used for SCK of Smart Card
PIN2 to PIN3: Used for lever shift DIR control

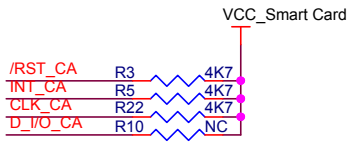

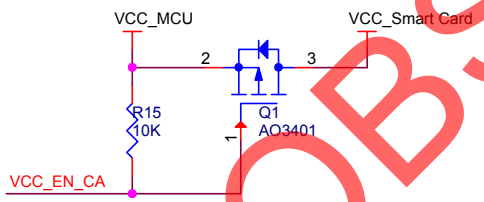

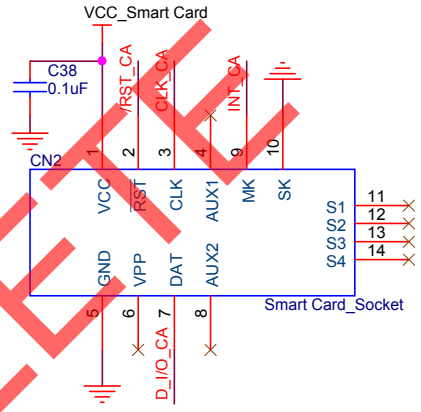

OBSOLETE

Spansion Inc.		
Author: Rex.Cao		
Title: (SCH)SK-FM4-U-PERIPHERAL		
Size: A4	Document Number: Smart Card	Rev: V2.0.0
Date: Friday, April 25, 2014	Sheet 5 of 19	

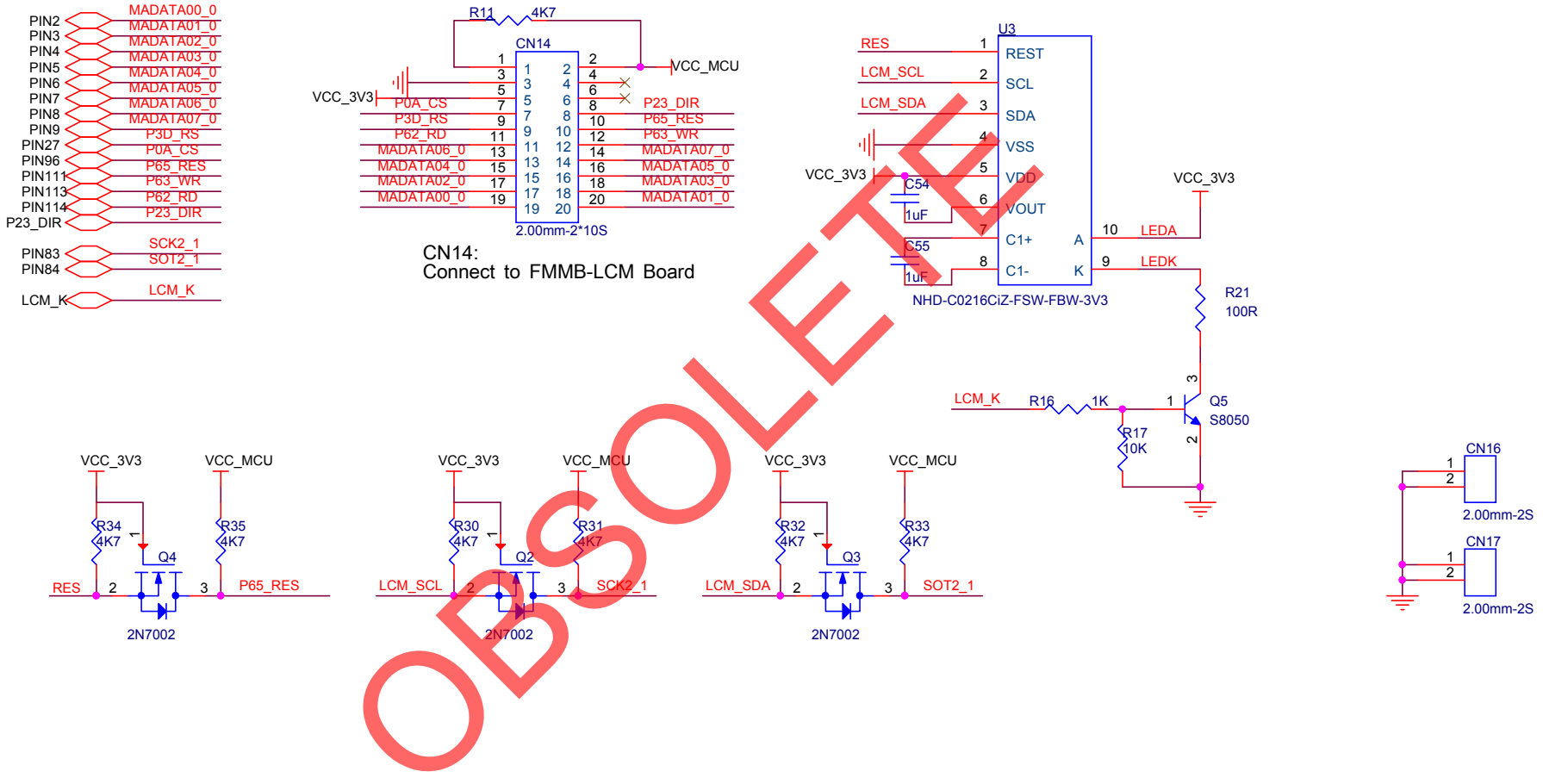

OBSOLETE

Spansion Inc.		
Author: Rex.Cao		
Title: (SCH)SK-FM4-U-PERIPHERAL		
Size: A4	Document Number: LCM	Rev: V2.0.0
Date: Monday, April 21, 2014	Sheet 6 of 19	

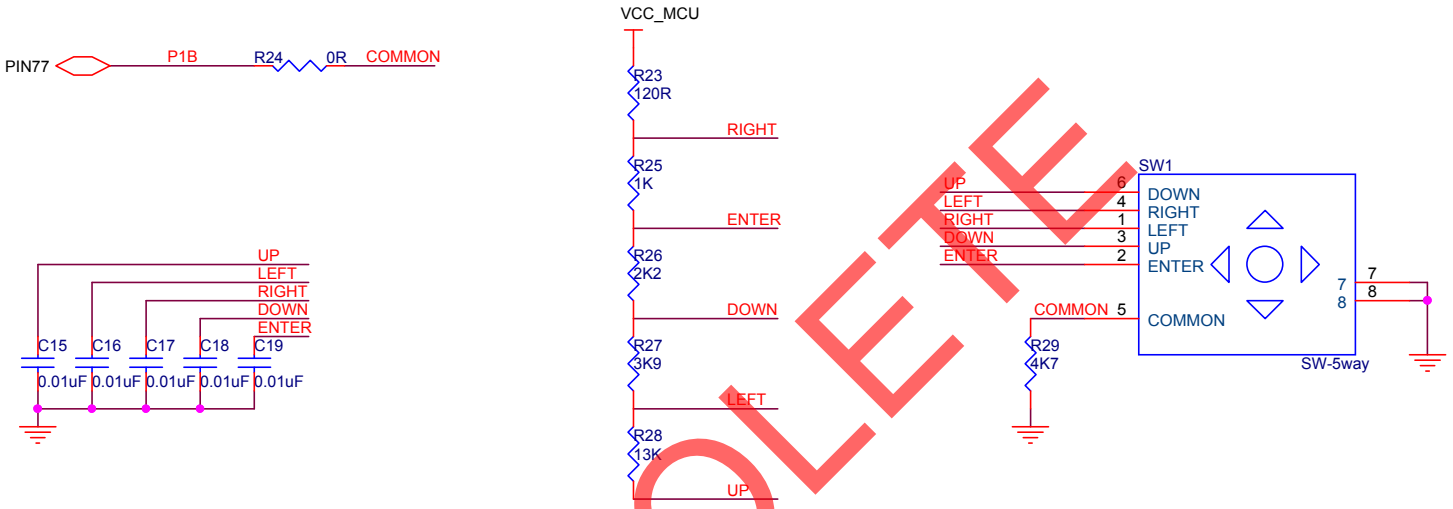

OBSOLETE

Spansion Inc.		
Author: Rex.Cao		
Title: (SCH)SK-FM4-U-PERIPHERAL		
Size: A4	Document Number: Joy Stick	Rev: V2.0.0
Date: Monday, April 21, 2014	Sheet 7 of 19	

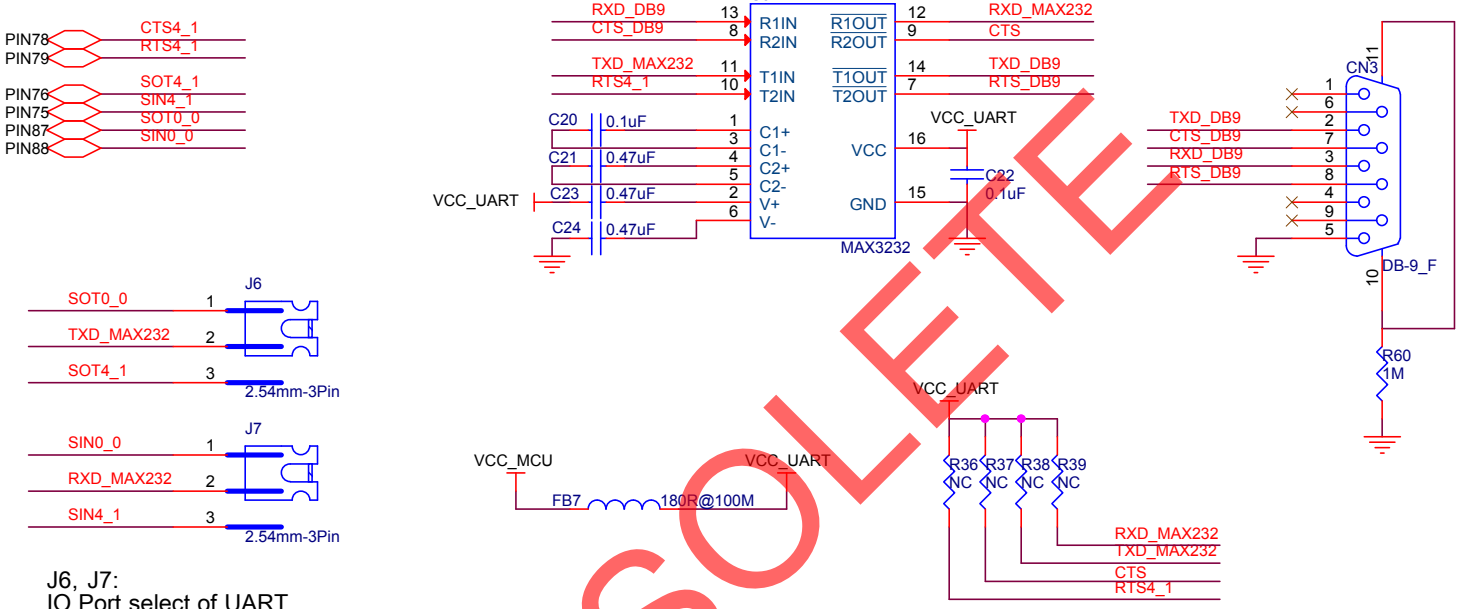

J6, J7:
IO Port select of UART

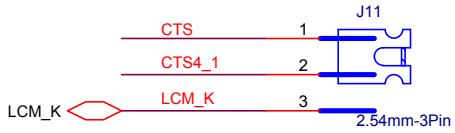

J11:
PIN2 to PIN1: Used for RS232 CTS
PIN2 to PIN3: Used for LCM backlight control

OBSOLETE

Spansion Inc.		
Author: Rex.Cao		
Title: (SCH)SK-FM4-U-PERIPHERAL		
Size: A4	Document Number: RS232	Rev: V2.0.0
Date: Monday, April 21, 2014	Sheet 8 of 19	

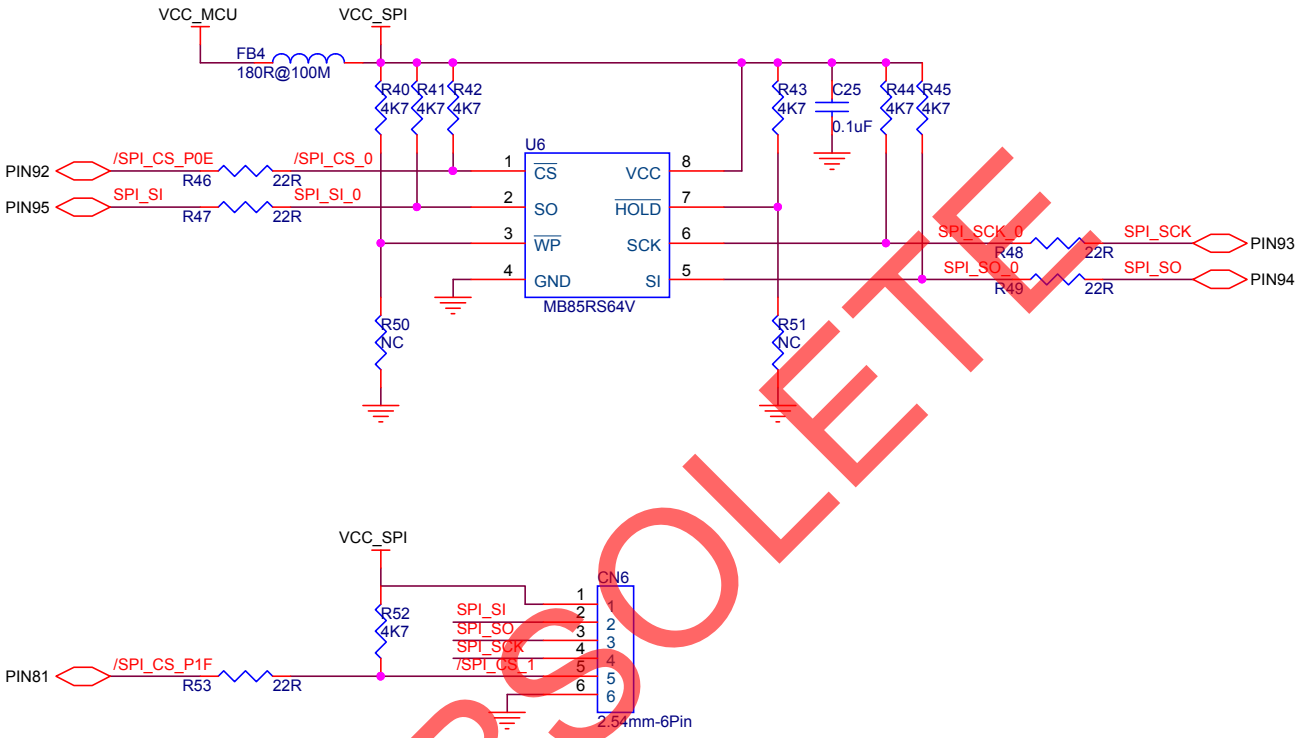

OBSOLETE

Spansion Inc.		
Author: Rex.Cao		
Title: (SCH)SK-FM4-U-PERIPHERAL		
Size: A4	Document Number: SPI IF	Rev: V2.0.0
Date: Monday, April 21, 2014	Sheet 9 of 19	

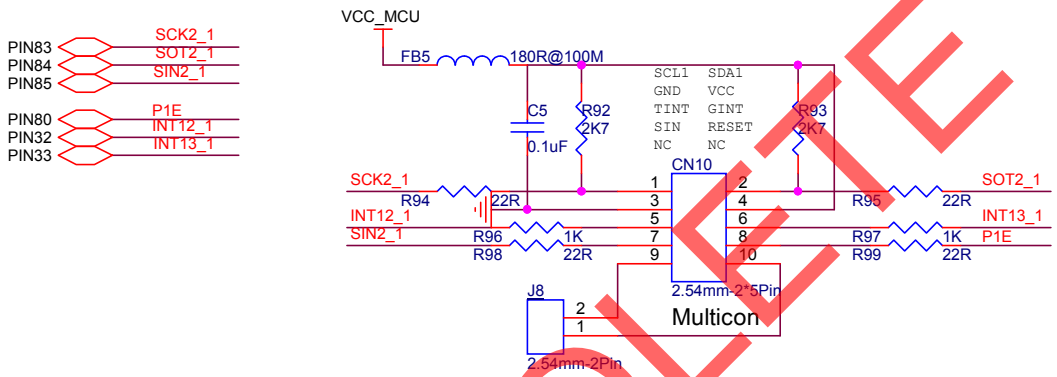

OBSOLETE

Spansion Inc.

Author: Rex.Cao

Title: (SCH)SK-FM4-U-PERIPHERAL

Size	Document Number	Rev
A4	Multicon	V2.0.0

Date: Monday, April 21, 2014 Sheet 10 of 19

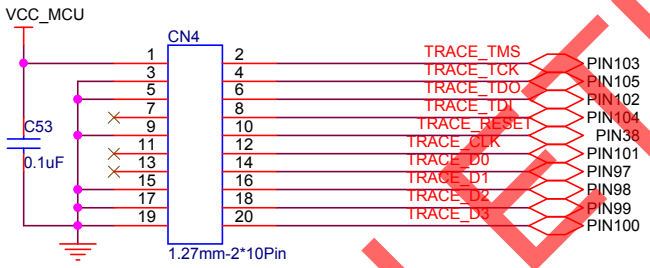

OBSOLETE

Spansion Inc.

Author: Rex.Cao

Title: (SCH)SK-FM4-U-PERIPHERAL

Size	Document Number	Rev
A4	TRACE	V2.0.0

Date: Monday, April 21, 2014 Sheet 11 of 19

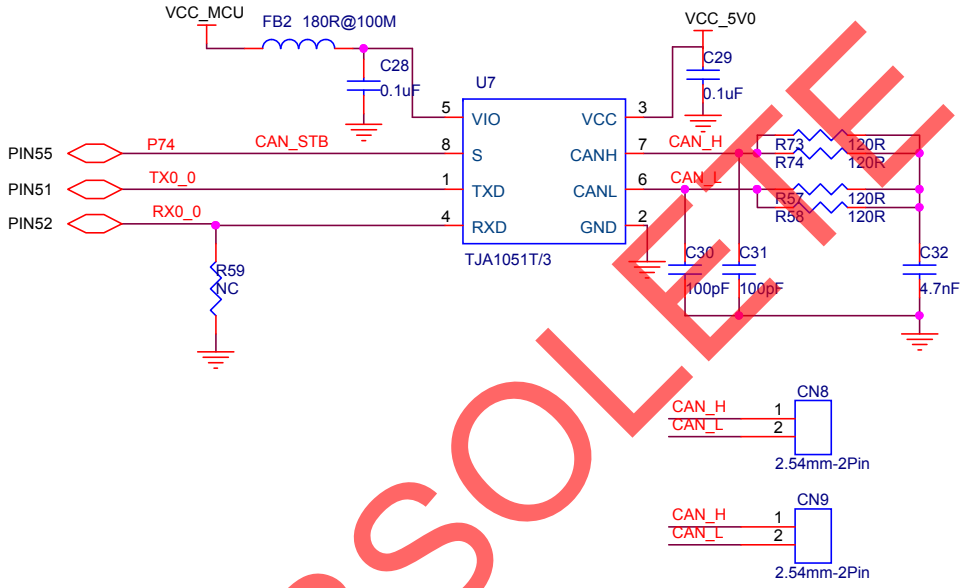

OBSOLETE

Spansion Inc.

Author: Rex.Cao

Title: (SCH)SK-FM4-U-PERIPHERAL

Size	Document Number	Rev
A4	CAN	V2.0.0

Date: Monday, April 21, 2014 Sheet 12 of 19

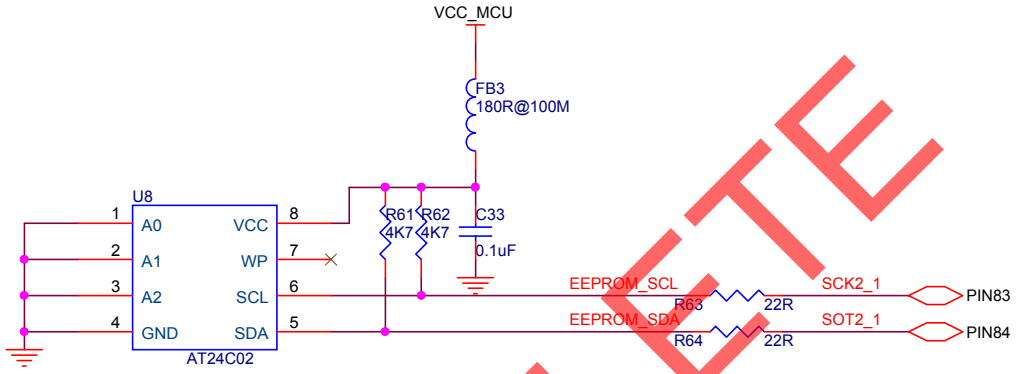

OBSOLETE

Spansion Inc.

Author: Rex.Cao

Title: (SCH)SK-FM4-U-PERIPHERAL

Size	Document Number	Rev
A4	EEPROM	V2.0.0

Date: Monday, April 21, 2014 Sheet 13 of 19

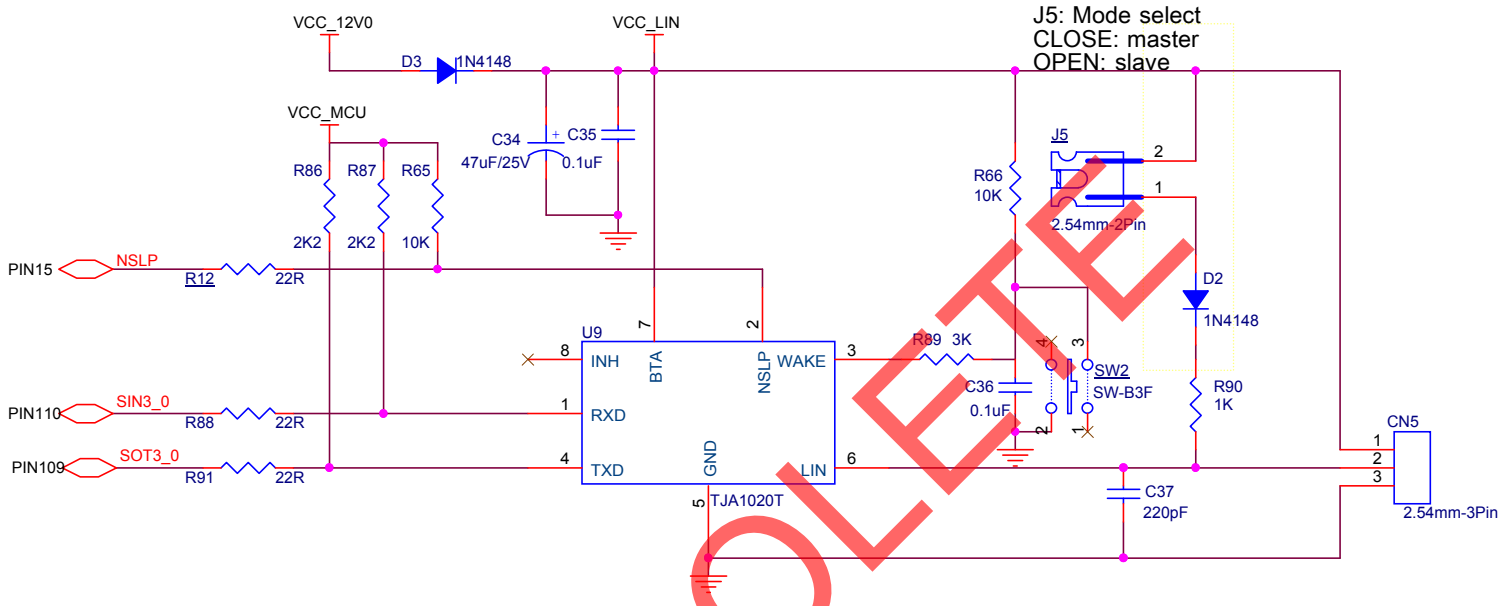

OBSOLETE

Spansion Inc.		
Author: Rex.Cao		
Title: (SCH)SK-FM4-U-PERIPHERAL		
Size: A4	Document Number: LIN	Rev: V2.0.0
Date: Friday, April 25, 2014	Sheet 14 of 19	

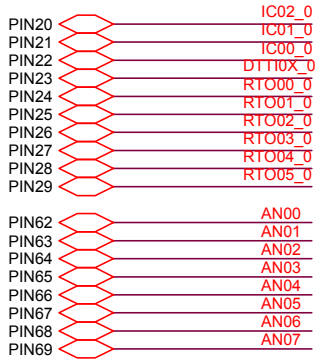

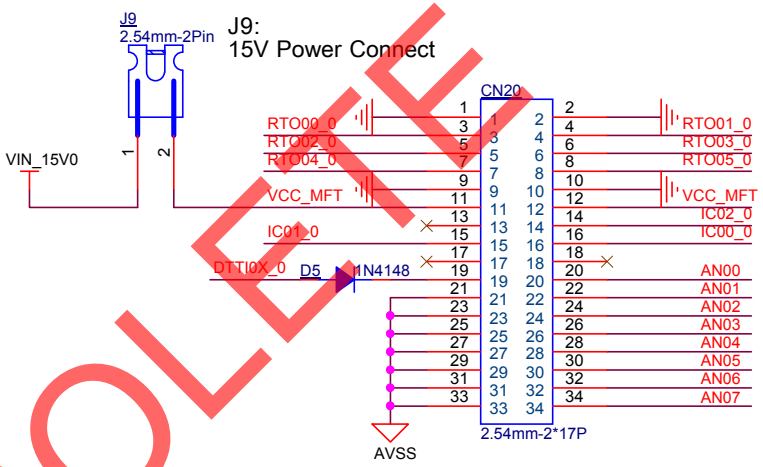

OBSOLETE

Spansion Inc.
Author: Rex.Cao

Title: (SCH)SK-FM4-U-PERIPHERAL

Size	Document Number	Rev
A4	MotorDrive	V2.0.0

Date: Tuesday, April 22, 2014 Sheet 15 of 19

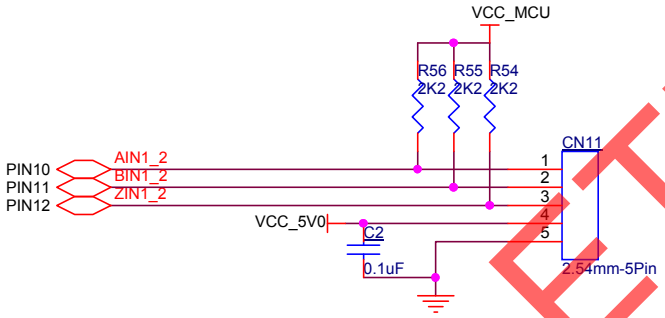

BT input of QPRC pls refer to J10 on Phonejack page

OBSOLETE

Spansion Inc.		
Author: Rex.Cao		
Title: (SCH)SK-FM4-U-PERIPHERAL		
Size: A4	Document Number: QPRC	Rev: V2.0.0
Date: Monday, April 21, 2014	Sheet 16 of 19	

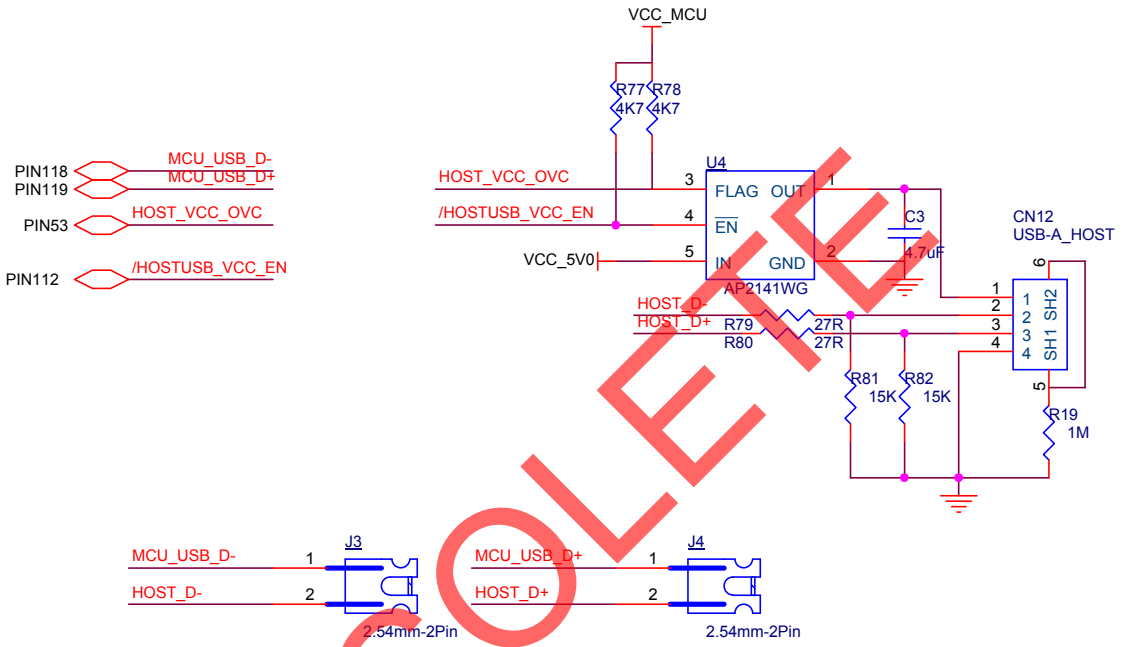

J3, J4:
Host: CLOSED
Function: OPEN

OBSOLETE

Spansion Inc.		
Author: Rex.Cao		
Title: (SCH)SK-FM4-U-PERIPHERAL		
Size: A4	Document Number: USB	Rev: V2.0.0
Date: Friday, April 25, 2014	Sheet 17 of 19	

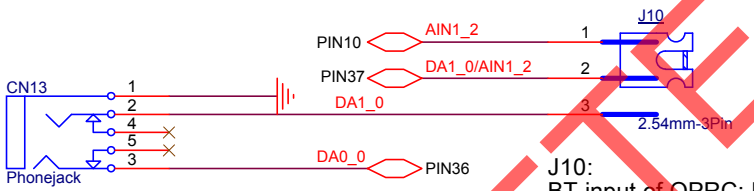

J10:
BT input of QPRC: Pin2 to Pin1
DA signal used: Pin2 to Pin3

OBSOLETE

Spansion Inc.		
Author: Rex.Cao		
Title: (SCH)SK-FM4-U-PERIPHERAL		
Size: A4	Document Number: Audio	Rev: V2.0.0
Date: Monday, April 21, 2014	Sheet 18 of 19	

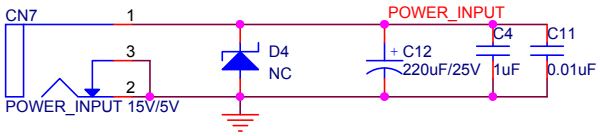

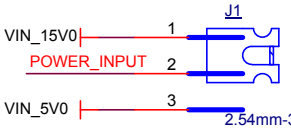

J1: Power value select of CN7 input

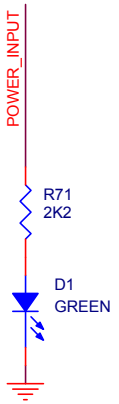

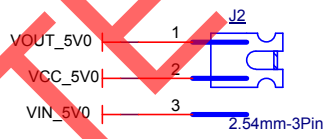

J2: 5V Power source select

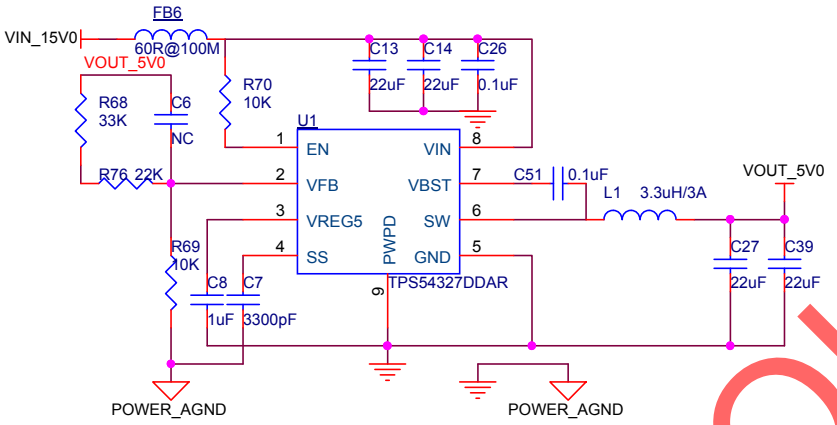

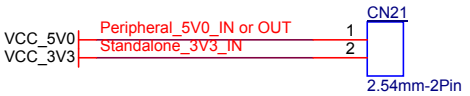

CN21: Conect to Standalone Board
For 5V Input or 5VOutput or 3V3 Input

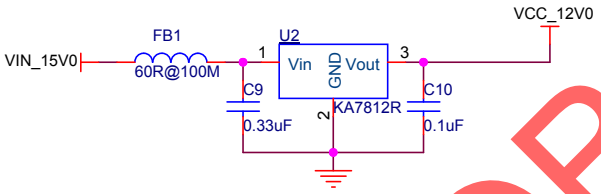

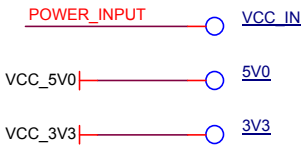

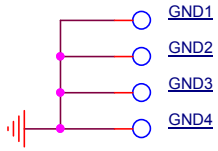

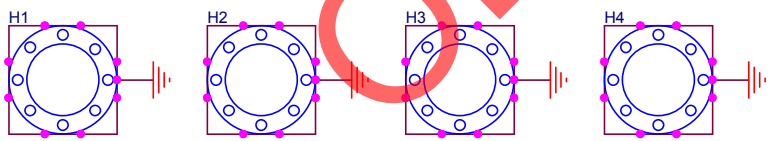

TEST POINT

OBSOLETE

Spansion Inc.		
Author: Rex.Cao		
Title: (SCH)SK-FM4-U-PERIPHERAL		
Size: A4	Document Number: POWER	Rev: V2.0.0
Date: Tuesday, April 22, 2014	Sheet 19 of 19	